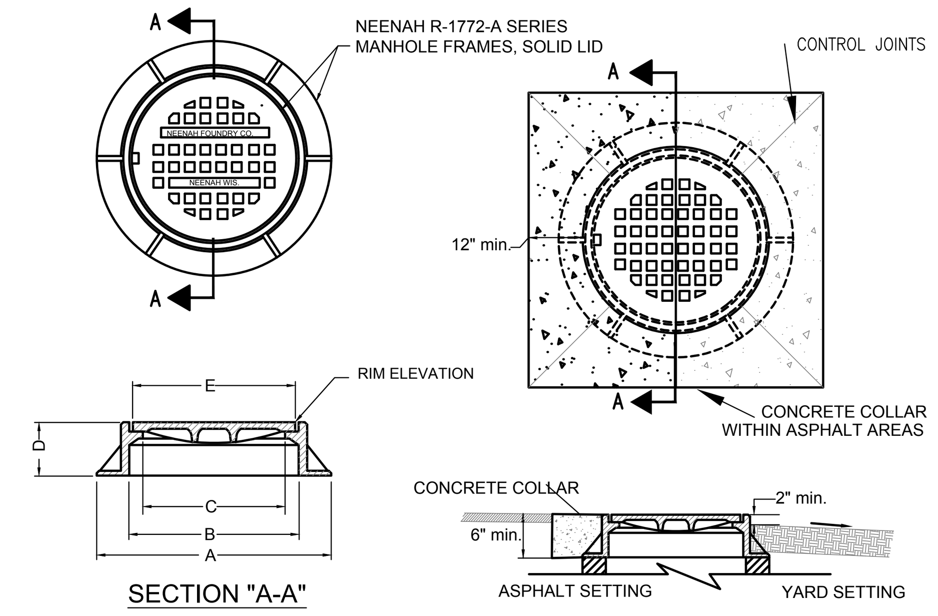

		FRONT					STRUCTURES	
CASTING	DESCRIPTION	A"	B"	C"	D"	E"	BOX INLET	MANHOLE
R-1772-A	SOLID LID	36Ø	25Ø	21Ø	7	22.75Ø	A, A-M, B*, E*, J*	MANHOLE

* - 4" FLATTOP REQUIRED

1 **SOLID LID CASTING SETTING DETAIL**
SCALE: NONE

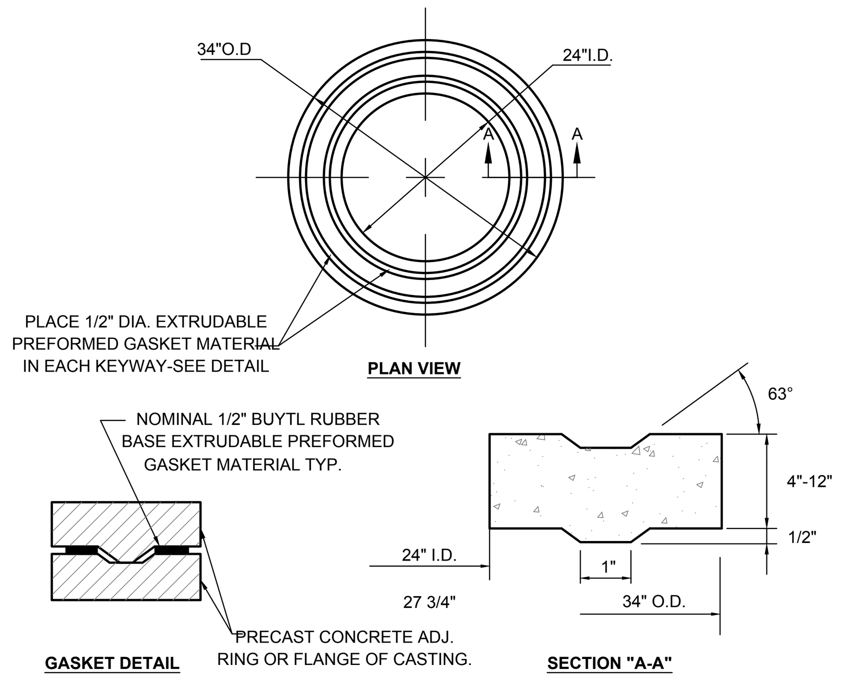

2 **PRECAST CONCRETE ADJUSTING RING**
SCALE: NONE

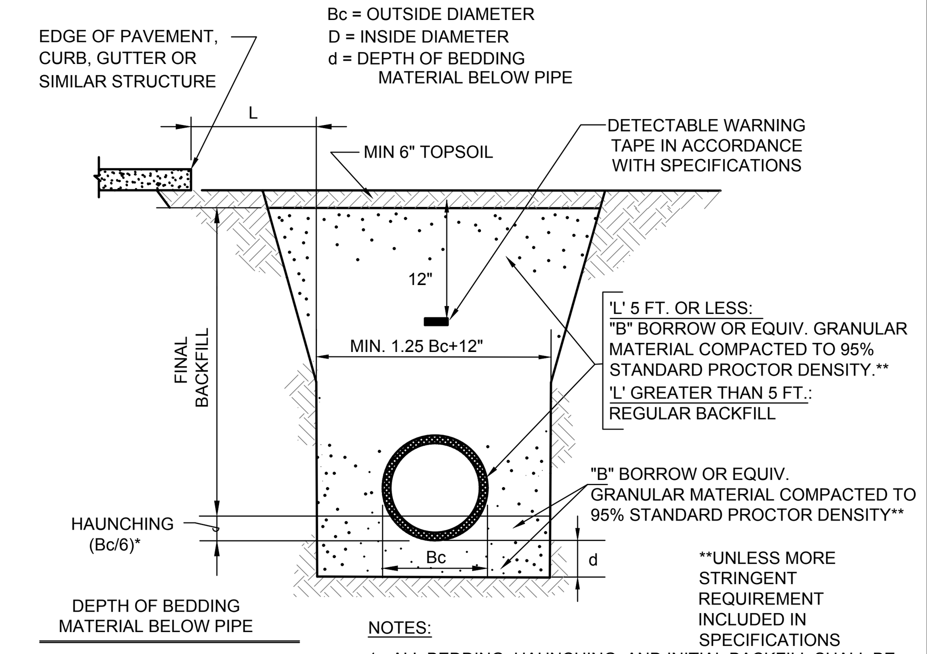

DEPTH OF BEDDING MATERIAL BELOW PIPE	
D	d MIN.
12" & 15"	4"
18" TO 60"	Bc/4

NOTES:

1. ALL BEDDING, HAUNCHING, AND INITIAL BACKFILL SHALL BE INSTALLED IN 6" BALANCED LIFTS.
2. A MINIMUM 9" CLEARANCE SHALL BE PROVIDED ON EACH SIDE OF THE INSTALLED PIPE.

*3. HAUNCHING FOR HORIZONTAL ELLIPTICAL PIPE SHALL BE 0.7Bc.

3 **REINFORCED CONCRETE PIPE (RCP) TRENCH DETAIL**
SCALE: NONE

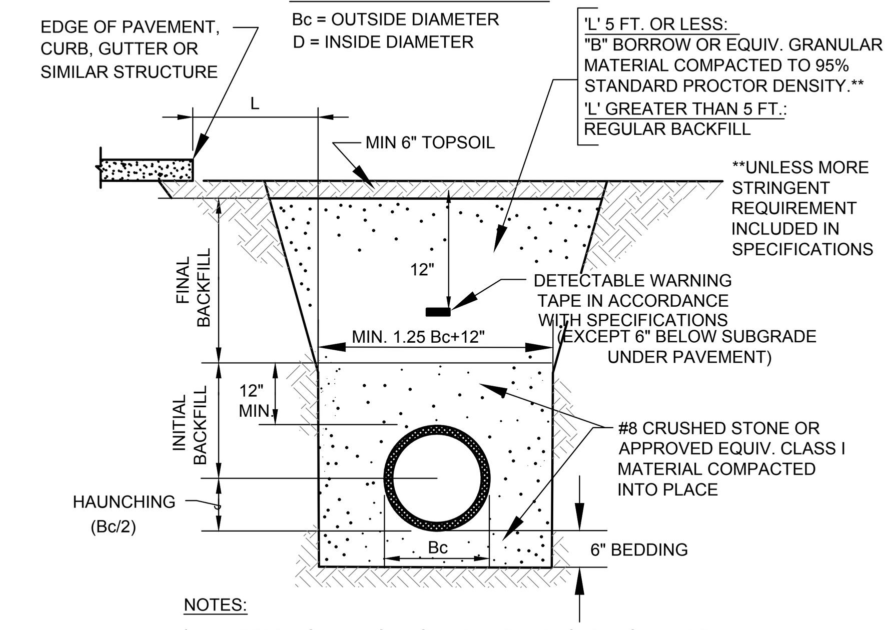

NOTES:

1. ALL BEDDING, HAUNCHING, AND INITIAL BACKFILL SHALL BE INSTALLED IN 6" BALANCED LIFTS.
2. A MINIMUM 9" CLEARANCE SHALL BE PROVIDED ON EACH SIDE OF THE INSTALLED PIPE.
3. FOR R/W CROSSINGS USE FLOWABLE CONCRETE BACKFILL AS REQUIRED BY REGULATORY AGENCIES.

4 **PVC AND HDPE TRENCH DETAIL**
SCALE: NONE

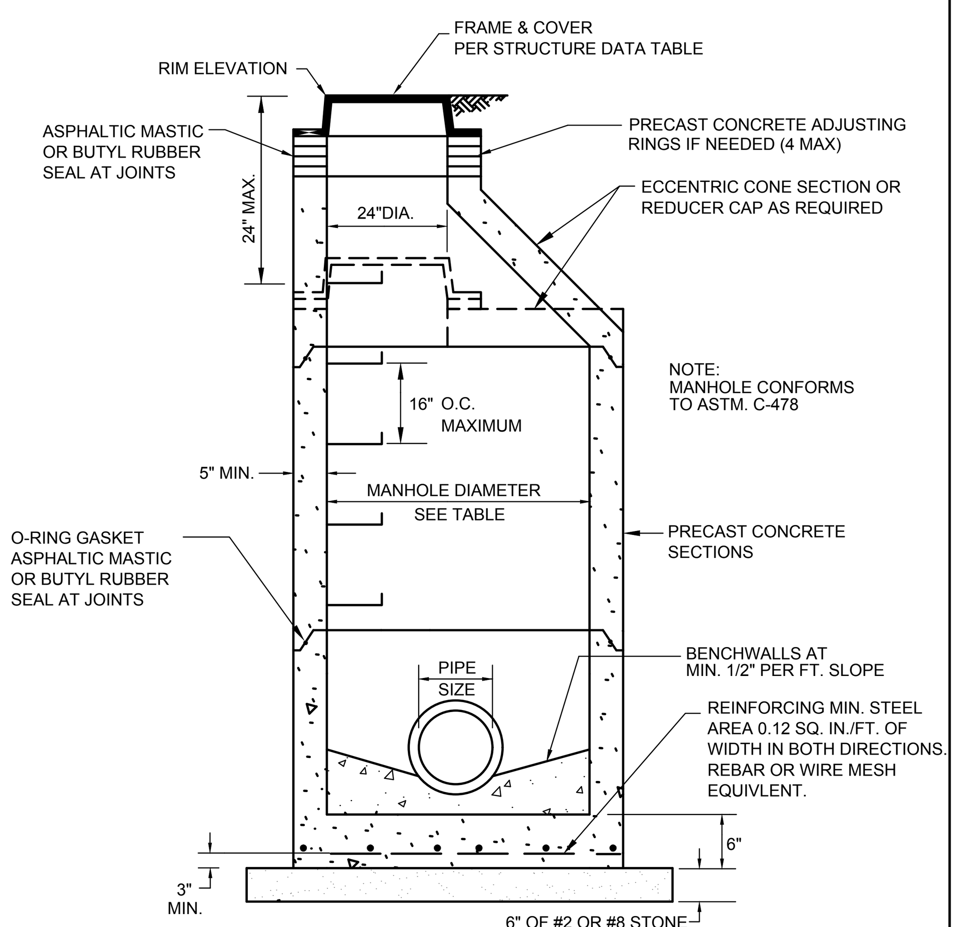

NOTE: MANHOLE STEPS SHALL BE POLYPROPYLENE, POLYPROPYLENE COATED STEEL REINFORCING OR AN APPROVED NON-CORROSIVE FIBERGLASS MATERIAL. THE COPOLYMER POLYPROPYLENE SHALL MEET THE REQUIREMENTS OF ASTM D-4101 REINFORCED WITH DEFORMED 3/8 INCH MINIMUM DIAMETER REINFORCING STEEL CONFORMING TO THE REQUIREMENTS OF ASTM A-615, GRADE 60. NON-COATED CAST IRON STEPS ARE NOT ACCEPTABLE.

PIPE SIZE	MANHOLE DIAMETERS PIPES ENTERING/LEAVING AT	
	0°-45° BEND	45°-90° BEND
8"-21"	48"	48"
24"	48"	60"
27"-30"	60"	60"
33"-36"	60"	72"
PIPE SIZE	PIPE TURNS	MANHOLE DIA.
24"-33'	> THAN 45°-90°	60"
33"-36"	STRAIGHT THRU	60"
42"-48"	UP TO 45°	72"
42"	> THAN 45°-90°	84"
48"	UP TO 45°	84"
48"	> THAN 45°-90°	96"
54"-66"	UP TO 60°	96"

5 **STANDARD STORM SEWER MANHOLE**
SCALE: NONE

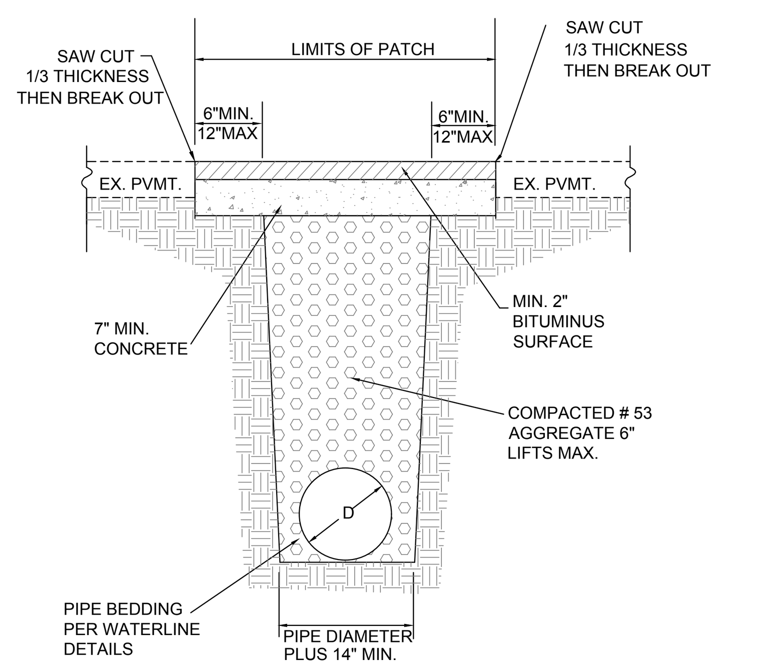

6 **PAVEMENT REPAIR DETAIL**
SCALE: NONE

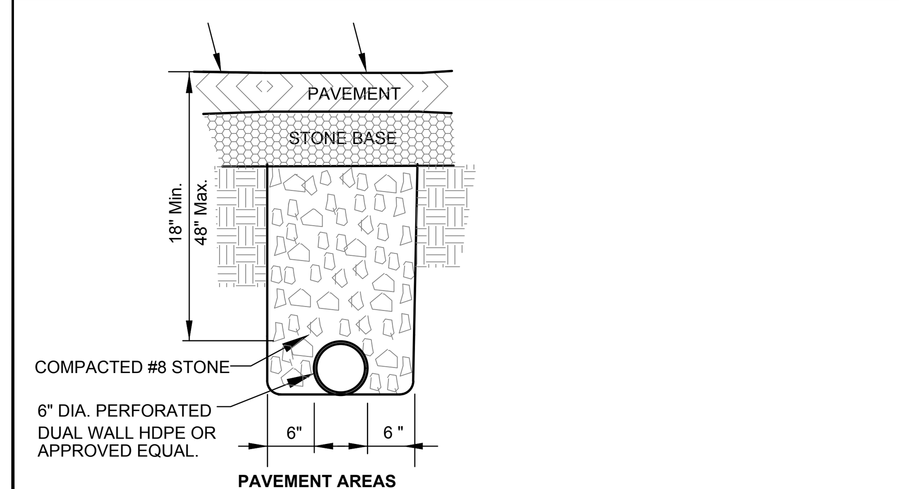

UNDERDRAIN TO BE INSTALLED TO DRAIN TOWARD STRUCTURE AT MINIMUM 0.5% SLOPE UNLESS INDICATED OTHERWISE ON PLANS

7 **PAVEMENT SUBSURFACE DRAIN DETAIL**
SCALE: NONE

BOX INLET SCHEDULE				
INLET TYPE	A	B	MAX PIPE Ø	
TYPE A *	22"	22"	15"	15"
TYPE AM *	24"	24"	18"	18"
TYPE B	30"	46"	21"	21"
TYPE E,F *	30"	30"	21"	21"
TYPE J,M *	24"	36"	18"	27"
TYPE S,T	15"	61"	0"	36"

* -PRECAST ADJUSTING SECTIONS AVAILABLE

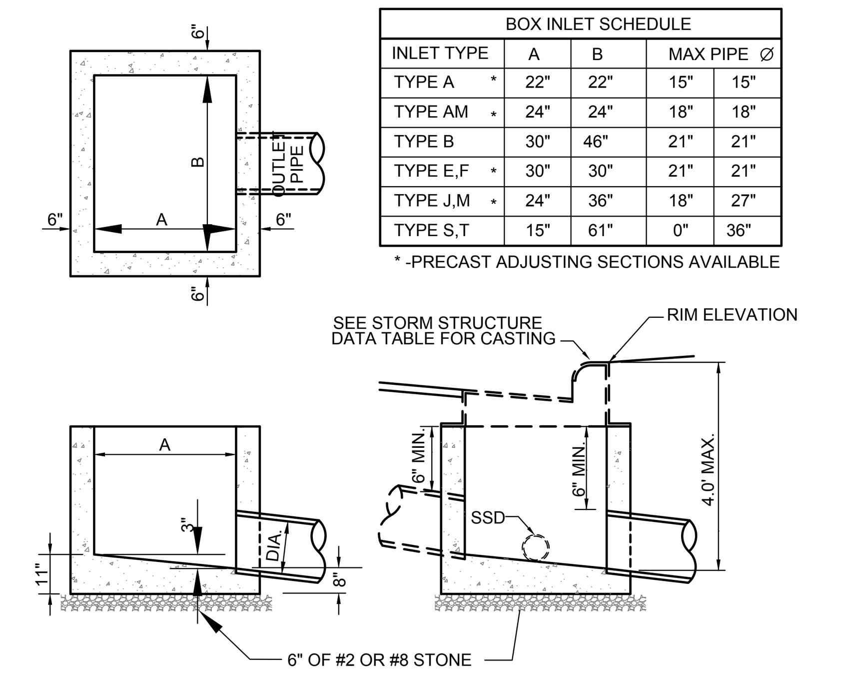

8 **BOX INLET DETAIL**
SCALE: NONE

NOTE: FOR CURB DETAILS, SEE L-SERIES (LANDSCAPE DETAILS)

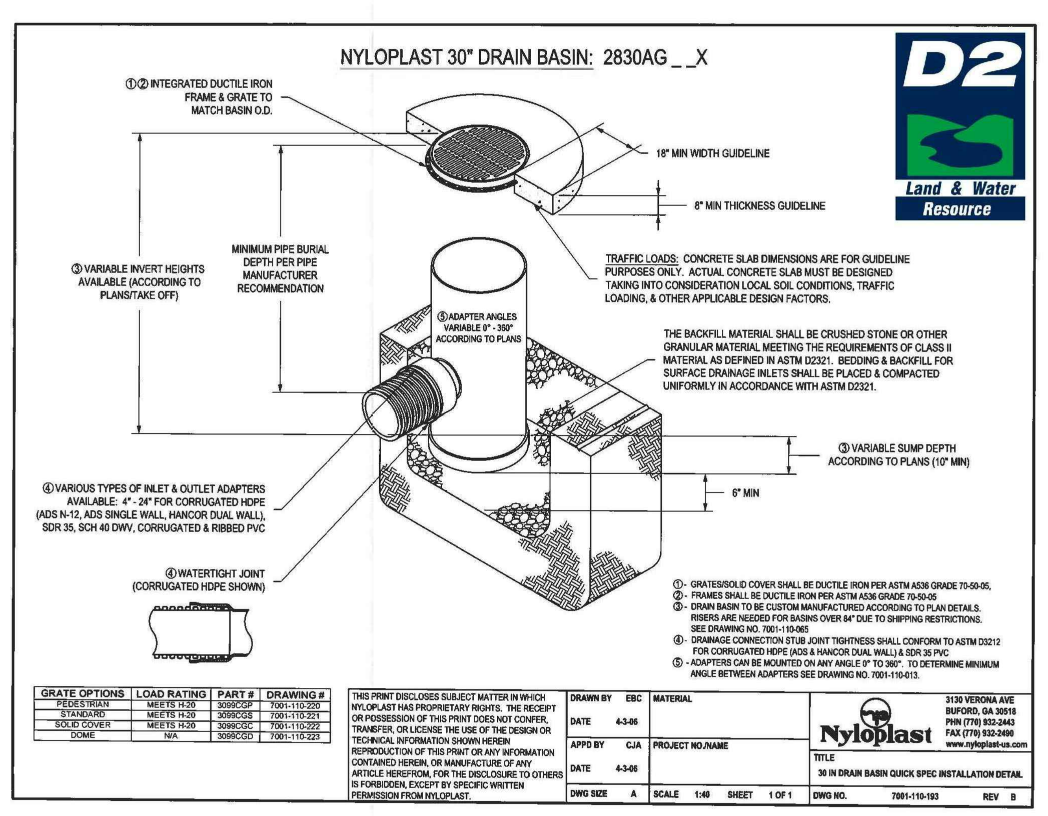

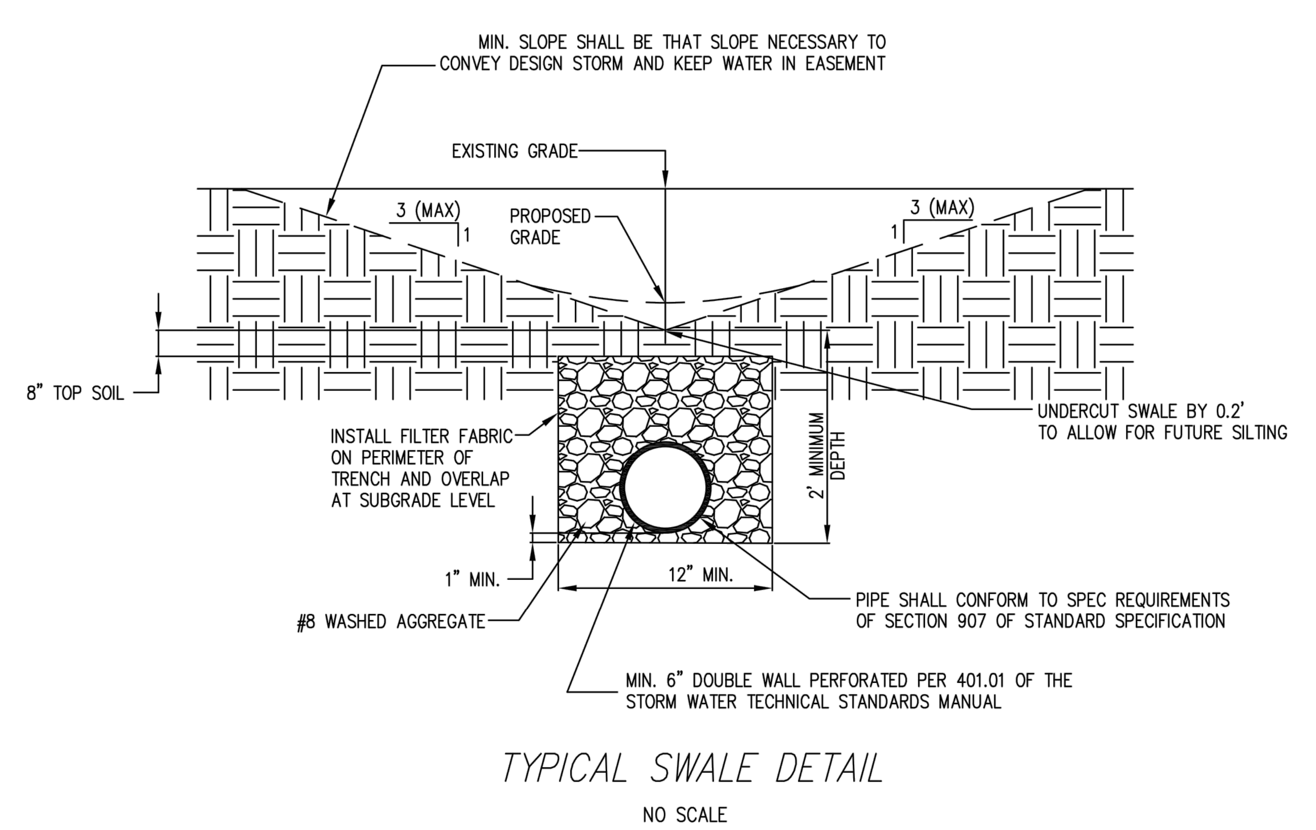

TYPICAL SWALE DETAIL

NO SCALE

CITY OF CARMEL STANDARDS

TYPICAL SWALE DETAILS

STANDARD DRAWING 10–30

TRENCH DETAIL FOR CITY STORM SEWERS

NO SCALE

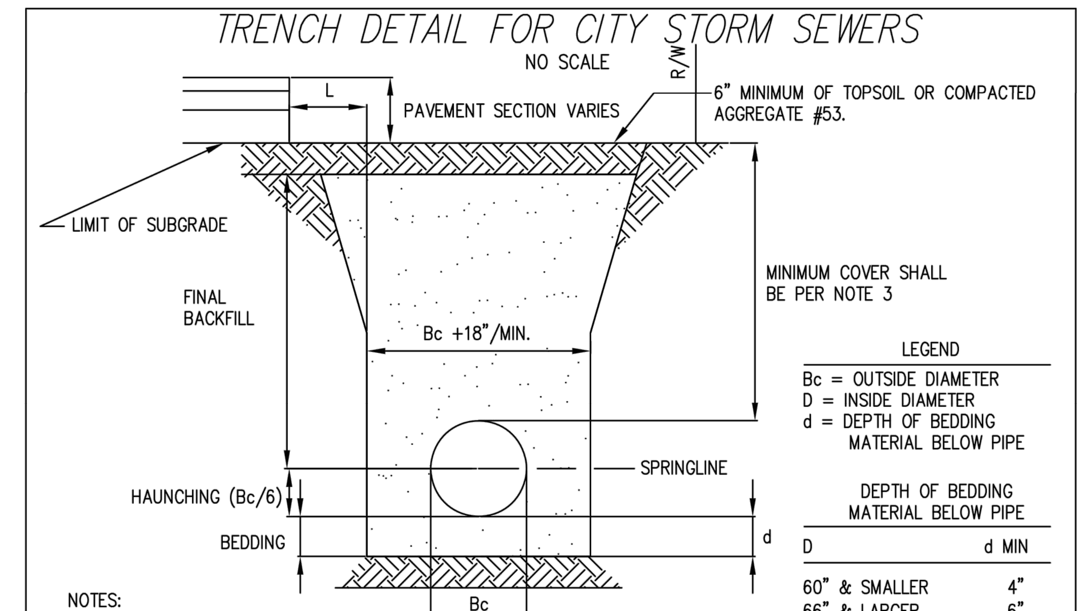

LEGEND
Bc = OUTSIDE DIAMETER
D = INSIDE DIAMETER
d = DEPTH OF BEDDING MATERIAL BELOW PIPE

DEPTH OF BEDDING MATERIAL BELOW PIPE	
D	d MIN
60" & SMALLER	4"
66" & LARGER	6"

NOTES:

1. BEDDING AND HAUNCHING FOR ALL RCP INSTALLATIONS SHALL BE #8 STONE MEETING THE MATERIAL REQUIREMENTS OF THE INDOT. BEDDING SHALL BE PLACED IN THE TRENCH BOTTOM SUCH THAT AFTER THE PIPE IS INSTALLED TO GRADE AND LINE, THERE REMAINS A 4" MINIMUM DEPTH OF MATERIAL BELOW THE PIPE BARREL AND A MINIMUM OF 3" BELOW THE BELL. FOR PIPE SIZES 66" AND LARGER, THE MINIMUM DEPTH OF MATERIAL BELOW THE PIPE BAREL SHALL BE 6". BEDDING SHALL BE PLACED TO BE UNIFORM AS POSSIBLE, BUT SHALL BE LOOSELY PLACED UNCOMPACTED MATERIAL UNDER THE MIDDLE THIRD OF THE PIPE PRIOR TO PLACEMENT OF THE PIPE. IF THE UNDERLYING SOILS OF THE TRENCH BOTTOM ARE SOFT OR YIELDING, THE SOIL SHALL BE UNDERCUT TO SUCH A DEPTH THAT WHEN REPAIRED WITH #2 STONE IT WILL PRODUCE A UNIFORM AND STABLE FOUNDATION ALONG THE ENTIRE LENGTH OF THE PIPE. HAUNCHING AND INITAIL BACKFILL SHALL BE COMPACTED IN 8" MAXIMUM LIFTS TO NOT LESS THAN 90% STANDARD PROCTOR DENSITY FOR THE ENTIRE DEPTH OF THE MATERIAL PLACED. THE BACKFILL SHALL BE BROUGHT UP EVENLY ON BOTH SIDES OF THE PIPE FOR THE FULL LENGTH OF THE PIPE. HAUNCHING SHALL EXTEND TO THE SPRINGLINE OF THE PIPE. MINIMUM TRENCH WIDTH SHALL BE THE OUTSIDE DIAMETER OF THE PIPE PLUS 18".
2. FINAL BACKFILL FOR ALL RCP INSTALLATIONS WHERE "L" IS 5' OR LESS SHALL BE B-BORROW FOR STRUCTURE BACKFILL MEETING THE MATERIAL REQUIREMENTS OF THE INDOT AND SHALL BE COMPACTED IN 6" MAXIMUM LIFTS TO NOT LESS THAN 95% STANDARD PROCTOR DENSITY FOR THE ENTIRE DEPTH OF THE MATERIAL PLACED. THE BACKFILL FOR THE TOP 6" OF THE EXCAVATION BELOW THE LIMIT OF SUBGRADE SHALL BE #53 STONE MEETING THE MATERIAL REQUIREMENTS OF THE INDOT AND SHALL BE COMPACTED TO NOT LESS THAN 95% STANDARD PROCTOR DENSITY. FINAL BACKFILL FOR ALL RCP INSTALLATIONS WHERE "L" IS GREATER THAN 5' SHALL BE CLEAN FILL MATERIAL FREE OF ROCKS LARGER THAN 6" IN DIAMATER, FROZEN LUMPS OF SOIL, WOOD OR OTHER EXTRANEOUS MATERIAL, COMPACTED IN 12" MAXIMUM LIFTS TO NOT LESS THAN 90% STANDARD PROCTOR DENSITY FOR THE ENTIRE DEPTH OF THE EXCAVATION. CONTRACTOR SHALL PROVIDE A 3rd PARTY TESTING AGENCY TO PROVIDE COMPACTION TESTING AS NECESSARY.
3. FOR INSTALLATION OF STORM MAINS, WATERMAINS, SANITARY MAINS, WATER SERVICE LATERALS, AND SANITARY SERVICE LATERALS UNDER CITY STREETS, REGARDLESS OF THE JURISDICTION OF THE UTILITY, THE MINIMUM COVER FROM THE TOP OF THE INSTALLED PAVEMENT OR FINAL GROUND ELEVATION TO THE TOP OF THE INSTALLED PIPE SHALL BE NO LESS THAN 2.5 FEET OF COVER ALONG ANY PART OF THE PIPE. IF THE STANDARD PRACTICE OF THE UTILITY THAT HAS JURISDICTION OVER THE INSTALLATION HAS A MORE STRINGENT COVER REQUIREMENT, THE MORE STRINGENT REQUIREMENT SHALL GOVERN.
4. IF EXISTING SUBGRADE HAS BEEN LIME STABILIZED, BACKFILL WITH B-BORROW TO BOTTOM OF EXISTING SUBGRADE AND FILL TO THE LIMIT OF EXISTING SUBGRADE WITH COMPACTED AGGREGATE NO 53.
5. THESE STANDARDS SHALL APPLY FOR STORM SEWERS INSTALLED WITHIN EXISTING AND PROPOSED CITY R/W AND FOR STORM SEWERS THAT SHALL BE MAINTAINED BY THE CITY, REGARDLESS OF STORM SEWER JURISDICTION.
6. ALL STORM PIPE WITHIN EXISTING OR PROPOSED CITY R/W SHALL BE REINFORCED CONCRETE PIPE REGARDLESS OF JURISDICTION OVER STORM PIPES.

STANDARD DRAWING 10–31

CITY OF CARMEL STANDARDS

TRENCH DETAIL FOR CITY STORM SEWERS

CARMEL CLAY SCHOOLS
CARMEL, INDIANA

A&F ENGINEERING
Transportation & Site Engineering
Creating Order Since 1966

PROJECT:
NEW ELEMENTARY SCHOOLS FOR CARMEL CLAY SCHOOLS
CARMEL, INDIANA

Scope Drawings:
These drawings indicate the general scope of the project in terms of architectural design concept, the dimensions of the building, the major architectural elements and the type of structural, mechanical and electrical systems.
The drawings do not necessarily indicate or describe all work required for full performance and completion of the requirements of the Contract.
On the basis of the general scope indicated or described, the trade contractors shall furnish all items required for the proper execution and completion of the work.

Revisions:

Rev. #	Revision Description	Issue Date
1	ADDENDUM # 3	12/20/2019

Issue Date	Drawn By	Checked By
11-19-19	SO	MK

Drawing Title:
SITE & STORM SEWER DETAILS

Certified By:
PAUL M. NASHERT
REGISTERED No. 11500626
STATE OF INDIANA
PROFESSIONAL ENGINEER

Drawing Number:
C601

Project Number:
18094

Z:\2019\19012L - CSO, CARMEL ELEMENTARY SCHOOLS (18082L)\DWGS\C-601_SHEET_ DETAILS.DWG plotted by STEVEN O'ROURKE on 12/19/2019 3:19:31 PM last saved by SOROURKE on 12/19/2019 3:19:14 PM
Xrefs: X36X24E.DWG & ST-1 BOX INLET DETAIL.DWG