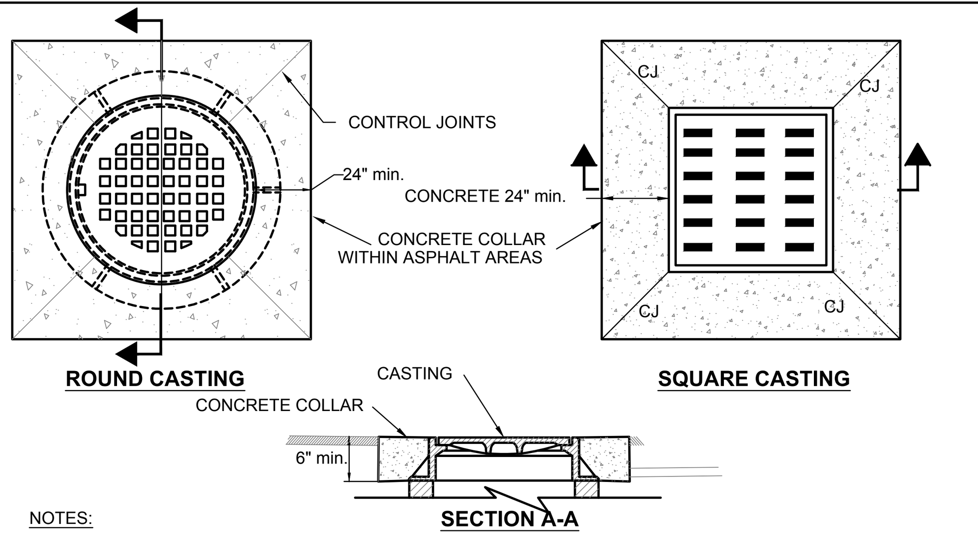

NOTES:

1. ALL INLET CASTINGS SHALL HAVE "NO DUMPING DRAINS TO STREAM" AND A FISH SYMBOL CAST INTO TOP OF CASTING.

1 CONCRETE COLLAR FOR CASTINGS WITHIN ASPH.
SCALE: NONE

AQUA-SWIRL™ PCS SPECIFICATION NOTES

03-19-13

1. Manufacturer shall be responsible for complete assembly of Swirl Concentrator.

2. Polymer Coated Steel (PCS) Swirl Concentrator shall be fabricated from polymer pre-coated steel sheet for corrugated steel pipe, and shall comply with ASTM A 760 and ASTM A 742.

3. Stub outs and internal components shall be supplied by manufacturer and MIG welded using accepted welding practices.

4. Manufacturer shall supply direct access to Swirl Concentrator via 30-inch ID riser(s). Riser should not be field cut by Contractor, Riser should maintain its finish cut length as supplied by manufacturer to match final grade per approved site elevations (as indicated on approved shop drawing). If necessary to extend riser, Contractor should use adjusting rings to bring top of structure to grade.

5. Contractor shall supply pipe couplings to and from Swirl Concentrator, which shall be Mar-Mac, Fernco, or Mission style flexible boot with stainless steel tension bands and shear guard. Mar-Mac couplings should be used for connections to corrugated plastic pipe and are recommended for use with larger diameter pipe (e.g. 24" ID and larger). A concrete cradle is recommended beneath Mar Mac's to prevent joint movement.

6. Contractor shall prepare excavation and off-load Swirl Concentrator. Contractor is responsible for bedding and backfill around Swirl Concentrator as detailed on site plan. (see notes 11 and 12)

7. Manufacturer shall supply standard manhole frame(s) and cover(s). (Traffic rated H20)

8. Where traffic loading (H-20) is required or anticipated, a 4-foot diameter, 14-inch thick reinforced concrete pad must be placed over the Swirl Concentrator to support and level the manhole frame. The top of riser pipe must be wrapped with compressible expansion joint material to a minimum 1-inch thickness to allow transfer of wheel loads from manhole cover to concrete slab. Manhole cover shall bear on concrete slab and not on riser pipe. The concrete slab shall have a minimum strength of 3,000 psi and be reinforced with #4 reinforcing steel (per drawing). Minimum cover over reinforcing steel shall be 1-inch. Top of manhole cover and concrete slab shall be level with finish grade.

9. Unless other traffic barriers are present, bollards shall be placed around access risers in non-traffic areas to prevent inadvertent loading by maintenance vehicles. Sample of typical bollard installation detail and recommended locations of bollards around the Swirl Concentrator can be provided upon request.

10. Where high groundwater elevations are present or anticipated, Contractor shall supply concrete anti-floatation pad underneath and poured over the octagonal base plate of the swirl (see Anti-Floatation Base Detail) to prevent buoyancy and base plate deflection (details, if necessary, available upon request).

11. Excavation and Bedding - The trench and trench bottom shall be constructed in accordance with ASTM A 798 Section 5, Trench Excavation, Section 6, Foundation, and Section 7, Bedding. The PCS Swirl Concentrator shall be installed on a stable base consisting of at least 6-inches of fine, readily compacted soil or granular fill material, and compacted to 95% proctor density. Bedding shall not contain stones retained on a 3-inch ring, frozen lumps, highly plastic clay, organic material, corrosive material, or other deleterious foreign materials. All required safety precautions for Swirl Concentrator installation are the responsibility of the Contractor and shall be per OSHA approved methods.

12. Backfill Requirements - Backfill materials shall be fine, readily compacted soil or granular fill material, and compacted to 90% proctor density. Processed granular materials with excellent structural characteristics are preferred. Coarse grained soils of USCS Groups GW, GP, GM, GC, SW, and SP as described in ASTM D 2487 are generally acceptable materials when compacted to 90% proctor density. Backfill shall not contain stones retained on a 3-inch ring, frozen lumps, highly plastic clay, organic material, corrosive material, or other deleterious foreign materials. Backfilling shall conform to ASTM A 798, Section 10, Structural Backfill Placement. Backfill shall be placed in 6 to 12 inch layers or "lifts" and compacted before adding the next lift. Backfill shall extend at least 18 inches outward from Swirl Concentrator and for the full height of the Swirl Concentrator (including riser(s)) extending laterally to undisturbed soils.

Aqua-Swirl Polymer Coated Steel (PCS) Stormwater Treatment System

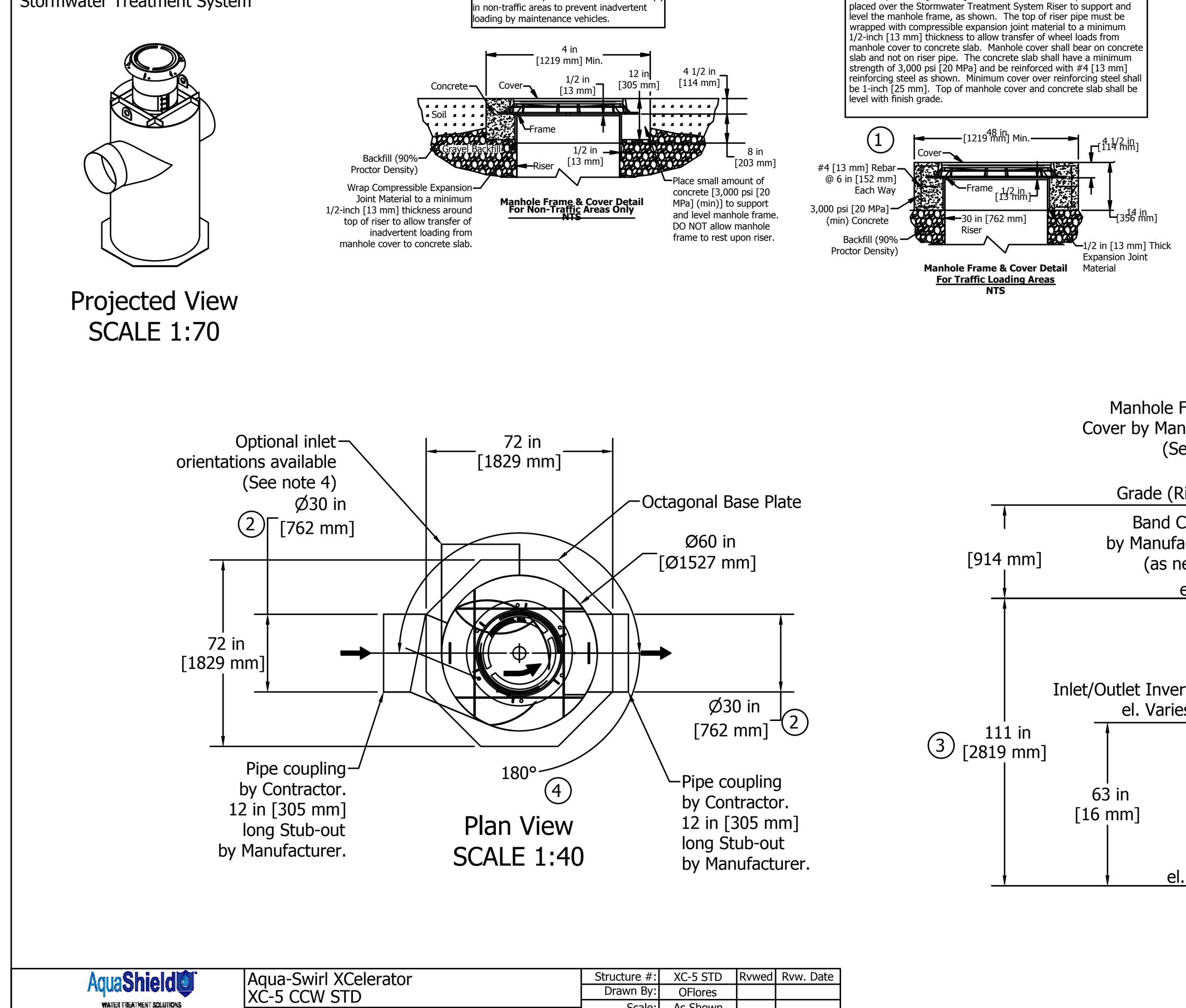

Please see accompanied Aqua-Swirl specification notes. See Site Plan for actual System orientation. Approximate dry (pick) weight: 2200 lbs [1000 kg].

1. As an alternative, 42 in [1067 mm] diameter, HS-20/25 rated precast concrete rings may be substituted. 14 in [356 mm] thickness must be maintained.
2. XC-5 inlet/outlet pipe size ranges up to 30 in [762 mm].
3. XC-5 chamber height may vary up to 111 in [2819 mm], depending on inlet/outlet pipe size.
4. Orientation may vary from a minimum of 90° to a maximum of 180°. Clockwise or counterclockwise orientation as needed.

Backfill shall extend at least 18 inches [457 mm] outward from Swirl Concentrator and for the full height of the Swirl Concentrator (including riser) extending laterally to undisturbed soils. (See MH Detail Below)

AquaShield — 2733 Kanasita Drive, Suite 111, Chattanooga, TN 37343 Phone (888) 344-9044 Fax (423) 826-2112 www.aquashieldinc.com

Aqua-Swirl XCelerator XC-5 CCW STD
Aqua-Swirl Stormwater Treatment System Standard Detail

Structure #:	XC-5 STD	Rvwed	Rvw. Date
Drawn By:	OFlores		
Scale:	As Shown		
Date:	6/26/2019		

U.S. Patent No. 6524473 and other Patent Pending

Aqua-Swirl Polymer Coated Steel (PCS) Stormwater Treatment System

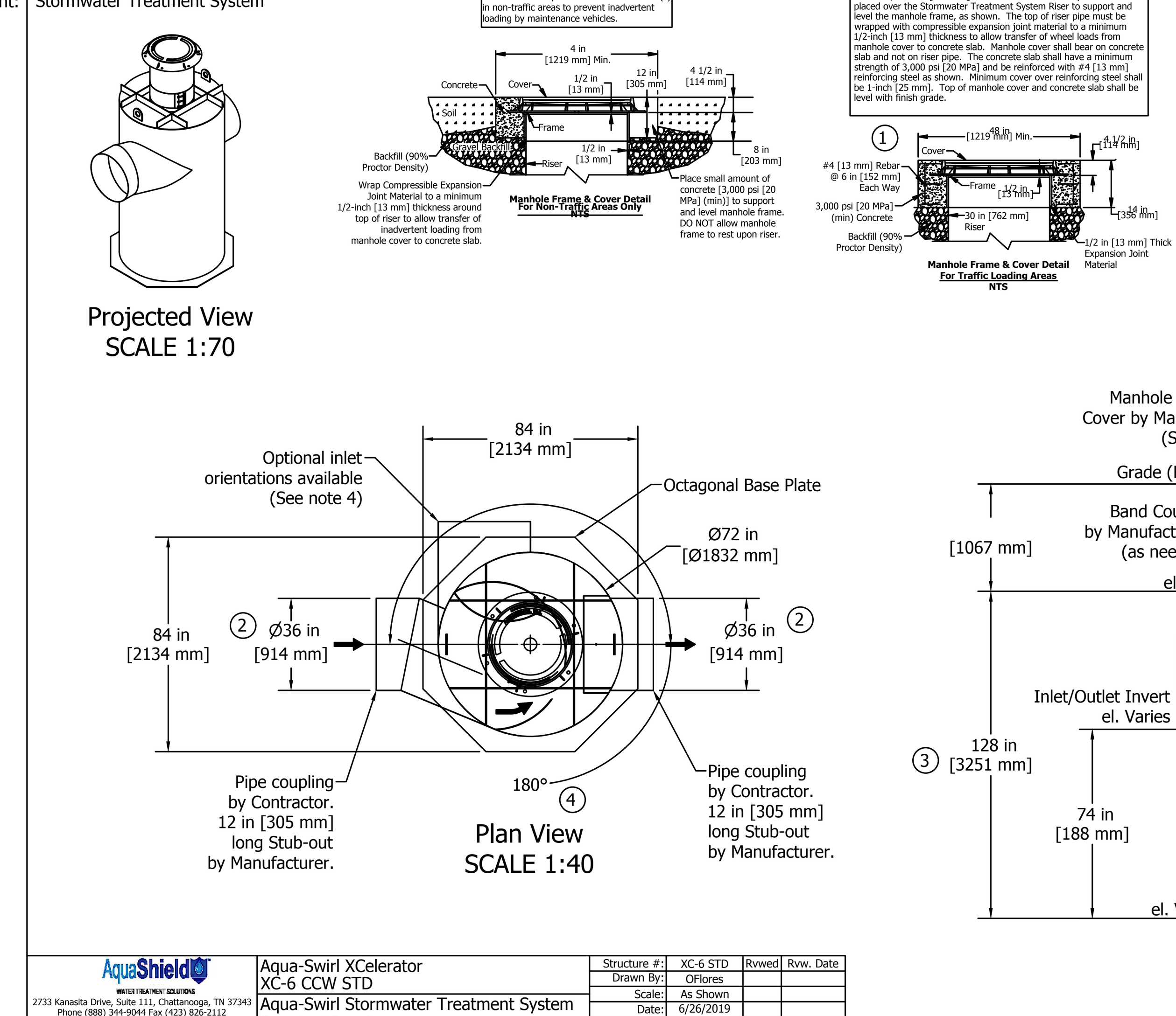

Please see accompanied Aqua-Swirl specification notes. See Site Plan for actual System orientation. Approximate dry (pick) weight: 3000 lbs [1400 kg].

1. As an alternative, 42 in [1067 mm] diameter, HS-20/25 rated precast concrete rings may be substituted. 14 in [356 mm] thickness must be maintained.
2. XC-6 inlet/outlet pipe size ranges up to 36 in [914 mm].
3. XC-6 chamber height may vary up to 128 in [3251 mm], depending on inlet/outlet pipe size.
4. Orientation may vary from a minimum of 90° to a maximum of 180°. Clockwise or counterclockwise orientation as needed.

Backfill shall extend at least 18 inches [457 mm] outward from Swirl Concentrator and for the full height of the Swirl Concentrator (including riser) extending laterally to undisturbed soils. (See MH Detail Below)

AquaShield — 2733 Kanasita Drive, Suite 111, Chattanooga, TN 37343 Phone (888) 344-9044 Fax (423) 826-2112 www.aquashieldinc.com

Aqua-Swirl XCelerator XC-6 CCW STD
Aqua-Swirl Stormwater Treatment System Standard Detail

Structure #:	XC-6 STD	Rvwed	Rvw. Date
Drawn By:	OFlores		
Scale:	As Shown		
Date:	6/26/2019		

U.S. Patent No. 6524473 and other Patent Pending

OFFICE OF THE HAMILTON COUNTY SURVEYOR

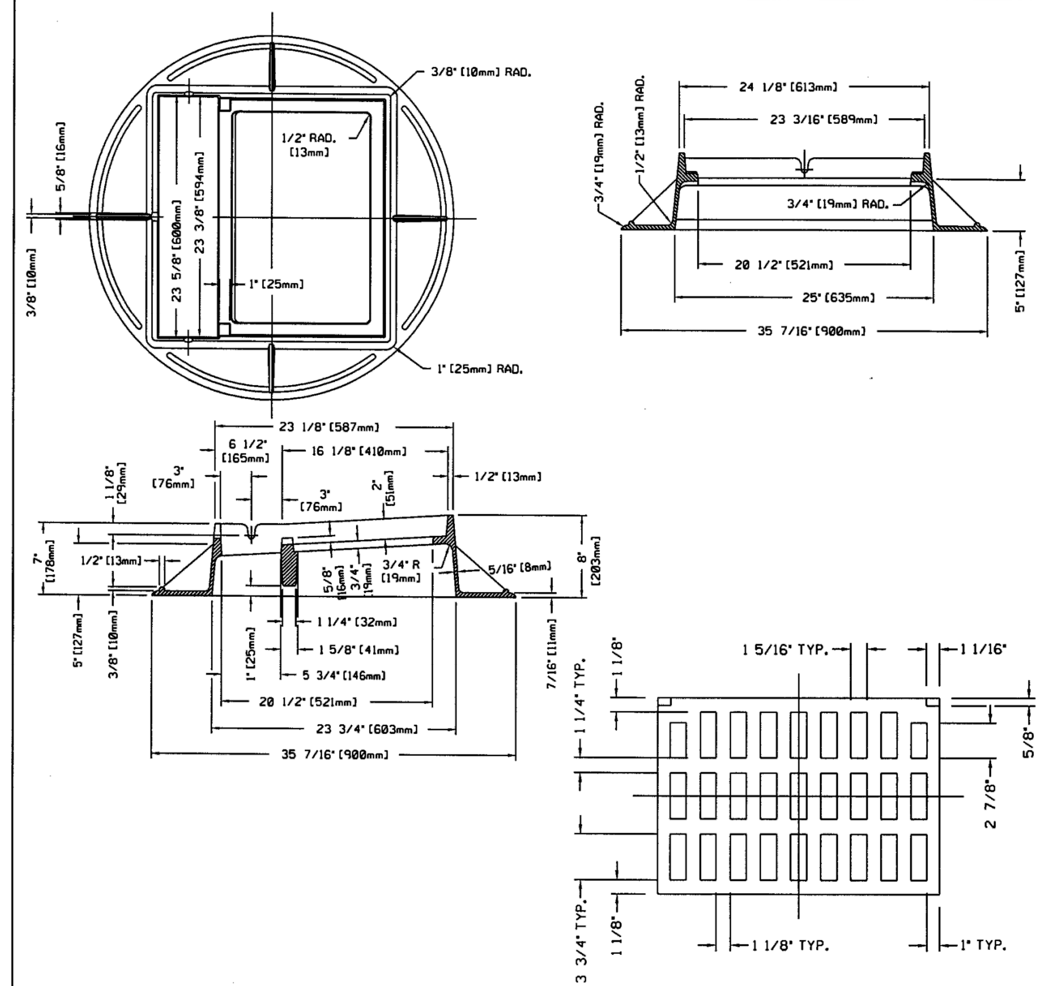

REFER TO SHEET CT-5

NEENAH	3010
EAST JORDAN	7010M1

NOTE: ALL DIMENSIONS SHOWN ARE IN ENGLISH AND [METRIC].
MATERIAL: CAST GRAY IRON ASTM A-48, CLASS 35B
FINISH: NO PAINT
WEIGHT: APPROX. 167#

* Or approved by Hamilton County Surveyor's Office (DRAWING NOT TO SCALE)

HAMILTON COUNTY SURVEYOR'S OFFICE
FRAME W/ 4 SIDED SEAT — REVISED: 9/25/2006
APPROVED: KENTON C. WARD, HAMILTON COUNTY SURVEYOR — 25SEP06 DATE
STANDARD PLAN CT-4

OFFICE OF THE HAMILTON COUNTY SURVEYOR

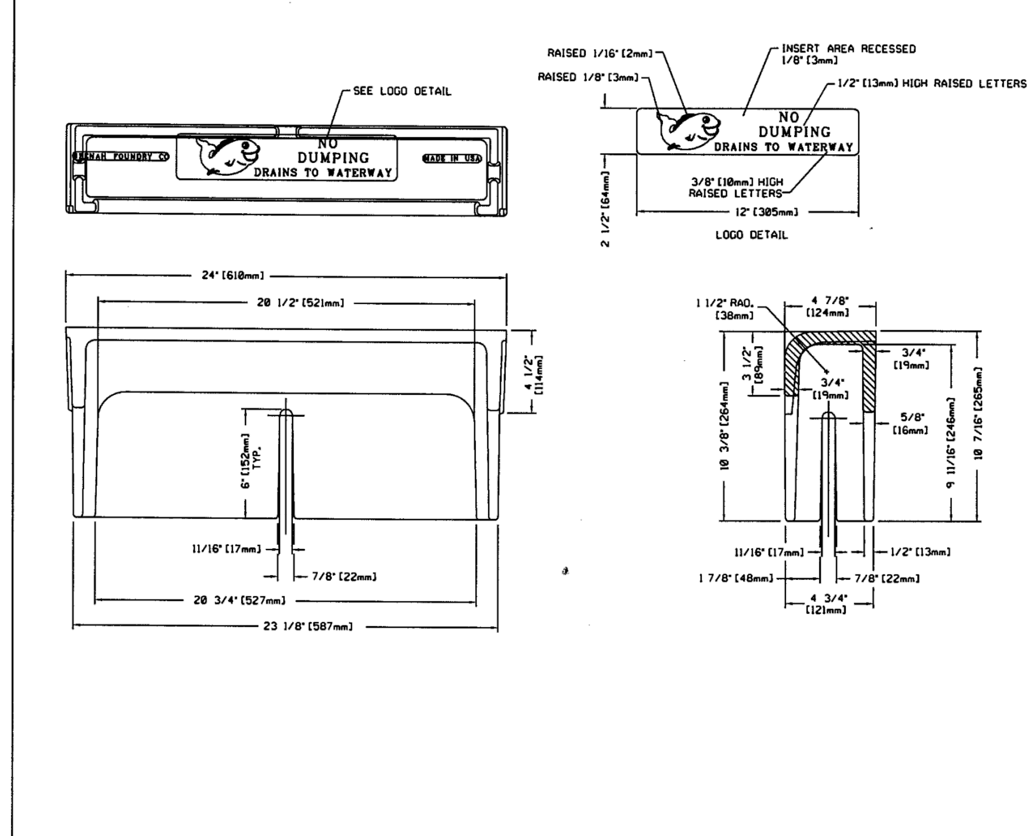

REFER TO SHEET CT-4

NEENAH	3010
EAST JORDAN	7010T1

NOTE: ALL DIMENSIONS SHOWN ARE IN ENGLISH AND [METRIC]
MATERIAL: CAST GRAY IRON ASTM A-48, CLASS 35B
FINISH: NO PAINT
WEIGHT: 82#

* Or approved by Hamilton County Surveyor's Office (DRAWING NOT TO SCALE)

HAMILTON COUNTY SURVEYOR'S OFFICE
1 1/2" RADIUS OPEN CURB BOX — REVISED: 9/25/2006
APPROVED: KENTON C. WARD, HAMILTON COUNTY SURVEYOR — 25SEP06 DATE
STANDARD PLAN CT-5

OFFICE OF THE HAMILTON COUNTY SURVEYOR

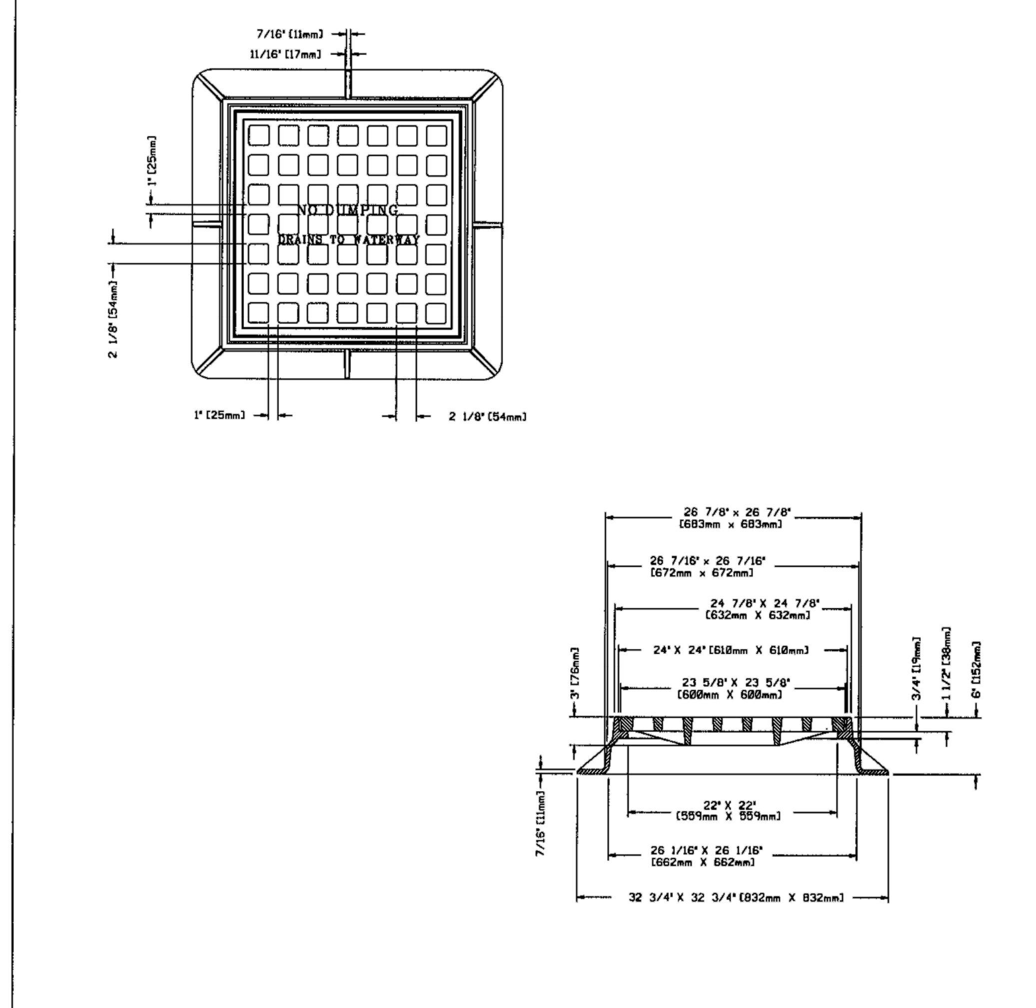

NEENAH	3405
EAST JORDAN	5250

NOTE: ALL DIMENSIONS SHOWN ARE IN ENGLISH AND [METRIC]
MATERIAL: CAST GRAY IRON ASTM A-48, CLASS 35B
FINISH: NO PAINT
WEIGHT: FRAME 138#; GRATE 138#

* Or approved by Hamilton County Surveyor's Office (DRAWING NOT TO SCALE)

HAMILTON COUNTY SURVEYOR'S OFFICE
PARKING LOT INLET CASTING — REVISED: 11/16/2004
APPROVED: KENTON C. WARD, HAMILTON COUNTY SURVEYOR — 11FEB05 DATE
STANDARD PLAN CT-6

GENERAL NOTES:

1. Where high groundwater elevations are present or anticipated, Contractor shall supply concrete anti-floatation pad and pour around the octagonal base plate of the swirl (as shown) to prevent buoyancy.

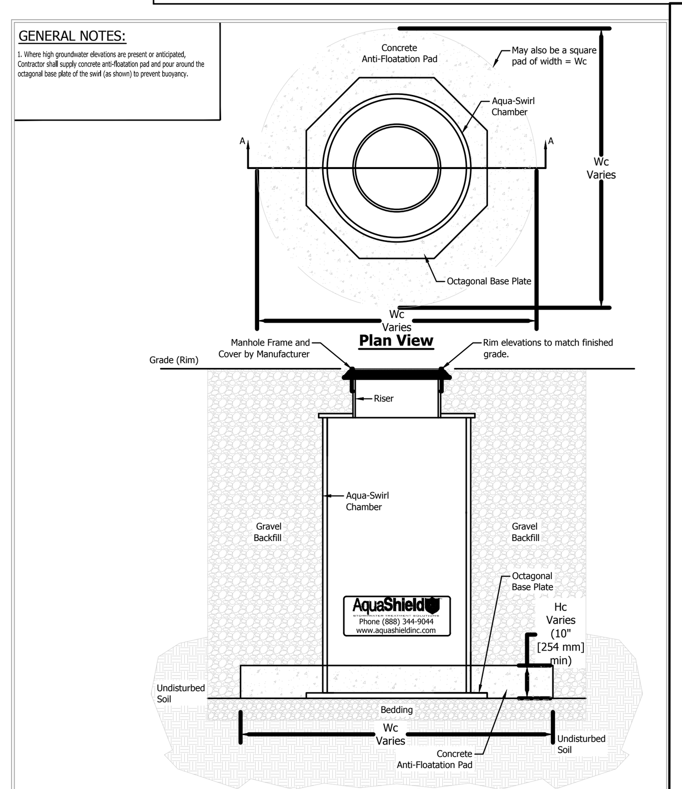

This is a sample detail, please contact AquaShield, Inc. for more information.

AquaShield — Aqua-Swirl Stormwater Treatment System — Anti-Floatation Ring Detail — Document: Concrete Pad Detail — Drawn By: JCW — Scale: NTS — Date: 04/21/15 — U.S. Patent No. 6524473

USE THIS FOR XCELERATOR UNITS

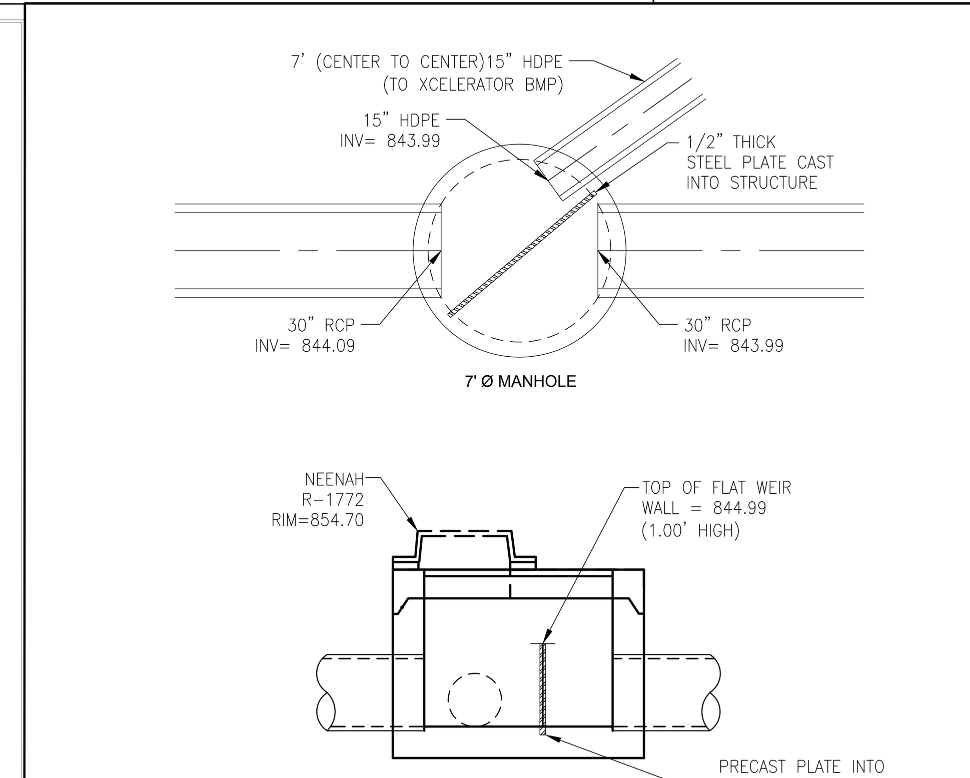

2 DIVERSION MANHOLE STRUCTURE 742
NOT TO SCALE

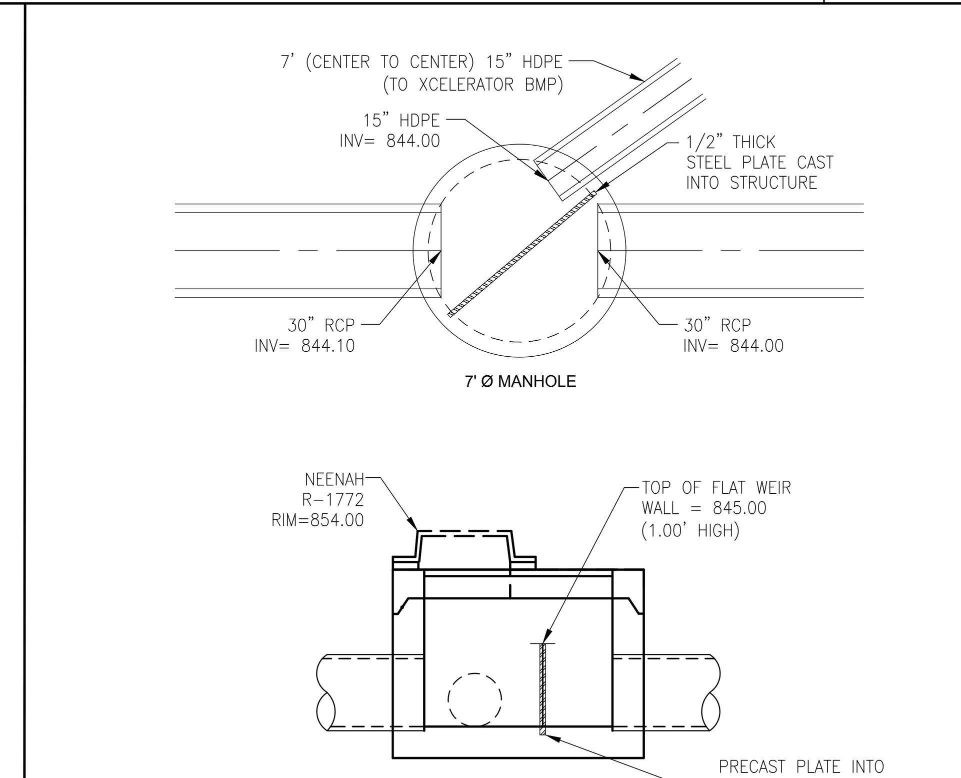

3 DIVERSION MANHOLE STRUCTURE 772
NOT TO SCALE

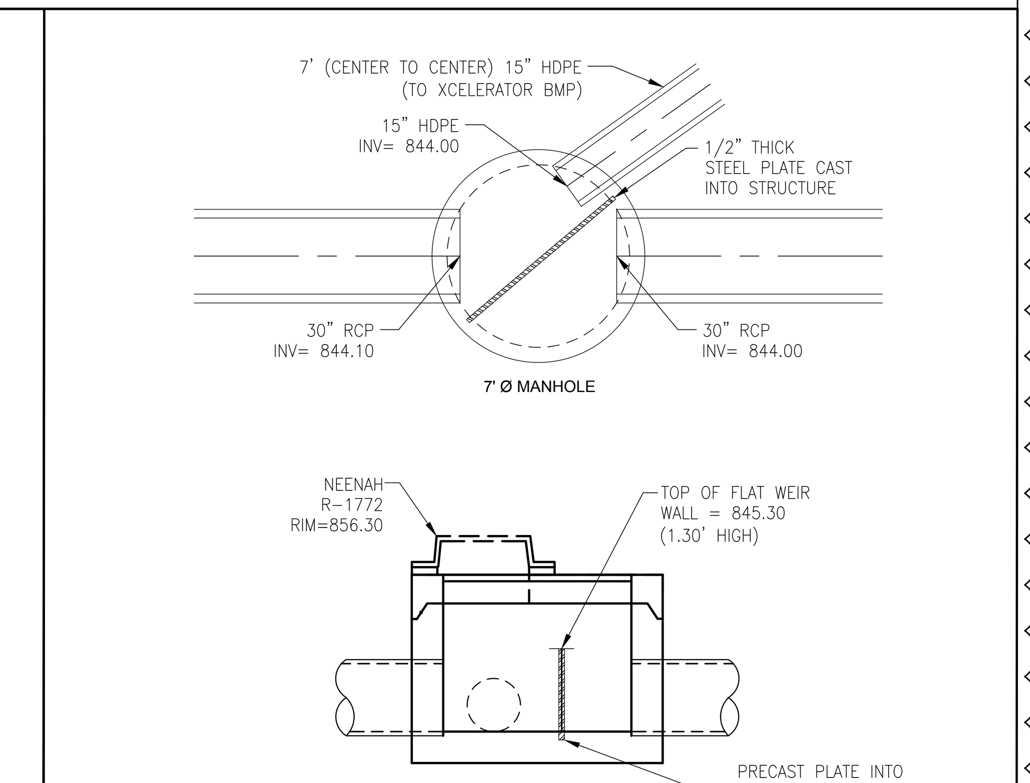

4 DIVERSION MANHOLE STRUCTURE 712
NOT TO SCALE

CARMEL CLAY SCHOOLS — CARMEL, INDIANA

A&F ENGINEERING — Transportation & Site Engineering — Creating Order Since 1966

PROJECT:
NEW ELEMENTARY SCHOOLS FOR CARMEL CLAY SCHOOLS
CARMEL, INDIANA

Scope Drawings:
These drawings indicate the general scope of the project in terms of architectural design concept, the dimensions of the building, the major architectural elements and the type of structural, mechanical and electrical systems.
The drawings do not necessarily indicate or describe all work required for full performance and completion of the requirements of the Contract.
On the basis of the general scope indicated or described, the trade contractors shall furnish all items required for the proper execution and completion of the work.

Revisions:

Rev. #	Revision Description	Issue Date
1	ADDENDUM # 3	12/20/2019

Issue Date	Drawn By	Checked By
11-19-19	SO	MK

Drawing Title:
STORM WATER SEWER DETAILS

Certified By:
PAUL M. NASHERT REGISTERED No. 11500626 STATE OF INDIANA PROFESSIONAL ENGINEER

Drawing Number: C603

Project Number: 18094

Z:\2019\19012L - CSO, CARMEL ELEMENTARY SCHOOLS (18082L)\DWGS\C-601_SHEET_ DETAILS.DWG plotted by STEVEN O'ROURKE on 12/19/2019 5:47:30 PM last saved by SOROURKE on 12/19/2019 5:47:19 PM
Xrefs: X36X24E.DWG