DIMENSIONS ARE TO THE INSIDE FACE OF CURB UNLESS NOTED OTHERWISE.

PARKING SPACES ARE 9' WIDE UNLESS NOTED OTHERWISE.

PAVEMENT MARKINGS ARE TO BE 4" PAINTED WHITE UNLESS NOTED OTHERWISE

Indiana 811 — Know what's below. Call before you dig.

0 30' 60'

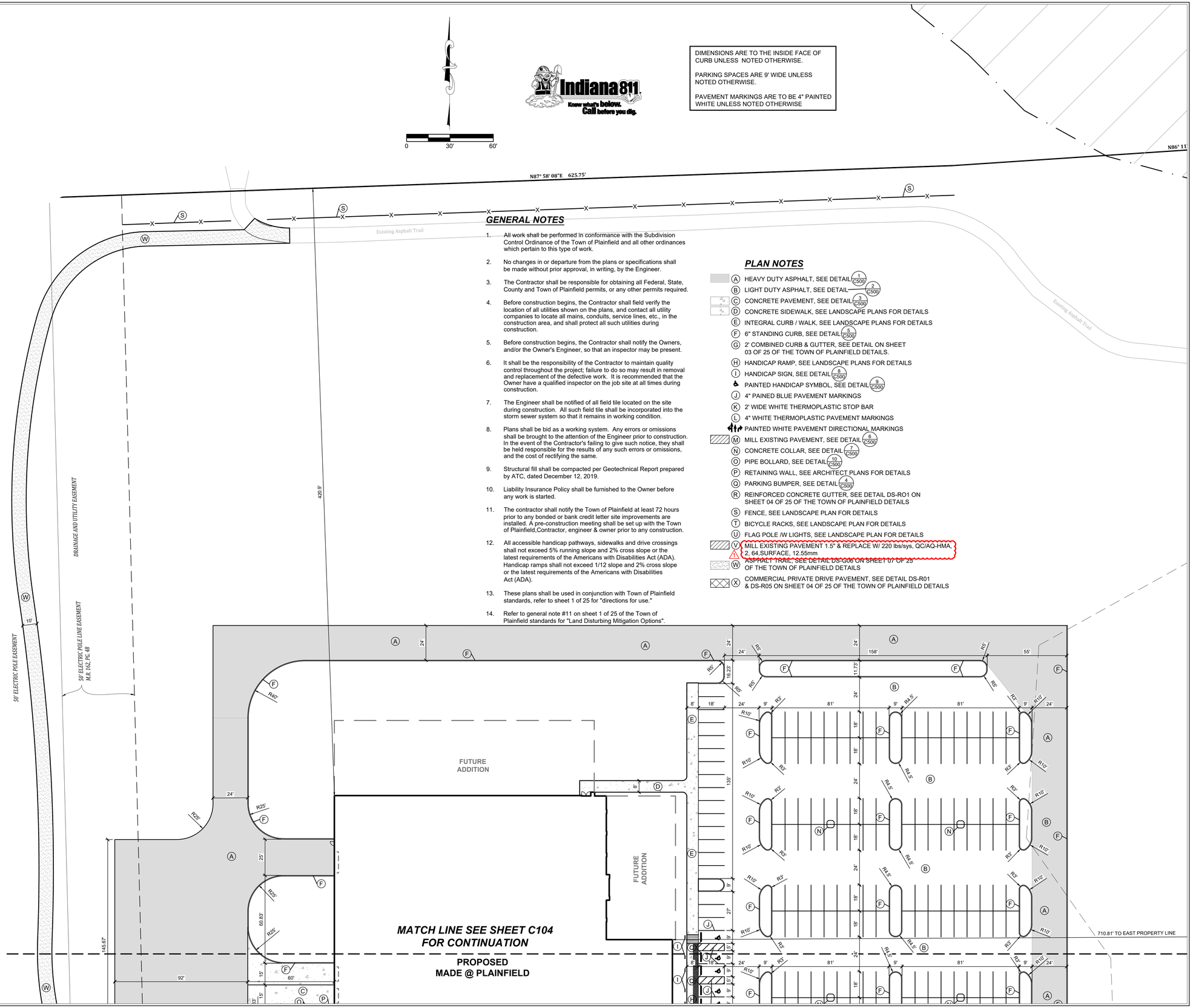

GENERAL NOTES

1. All work shall be performed in conformance with the Subdivision Control Ordinance of the Town of Plainfield and all other ordinances which pertain to this type of work.
2. No changes in or departure from the plans or specifications shall be made without prior approval, in writing, by the Engineer.
3. The Contractor shall be responsible for obtaining all Federal, State, County and Town of Plainfield permits, or any other permits required.
4. Before construction begins, the Contractor shall field verify the location of all utilities shown on the plans, and contact all utility companies to locate all mains, conduits, service lines, etc., in the construction area, and shall protect all such utilities during construction.
5. Before construction begins, the Contractor shall notify the Owners, and/or the Owner's Engineer, so that an inspector may be present.
6. It shall be the responsibility of the Contractor to maintain quality control throughout the project; failure to do so may result in removal and replacement of the defective work. It is recommended that the Owner have a qualified inspector on the job site at all times during construction.
7. The Engineer shall be notified of all field tile located on the site during construction. All such field tile shall be incorporated into the storm sewer system so that it remains in working condition.
8. Plans shall be bid as a working system. Any errors or omissions shall be brought to the attention of the Engineer prior to construction. In the event of the Contractor's failing to give such notice, they shall be held responsible for the results of any such errors or omissions, and the cost of rectifying the same.
9. Structural fill shall be compacted per Geotechnical Report prepared by ATC, dated December 12, 2019.
10. Liability Insurance Policy shall be furnished to the Owner before any work is started.
11. The contractor shall notify the Town of Plainfield at least 72 hours prior to any bonded or bank credit letter site improvements are installed. A pre-construction meeting shall be set up with the Town of Plainfield,Contractor, engineer & owner prior to any construction.
12. All accessible handicap pathways, sidewalks and drive crossings shall not exceed 5% running slope and 2% cross slope or the latest requirements of the Americans with Disabilities Act (ADA). Handicap ramps shall not exceed 1/12 slope and 2% cross slope or the latest requirements of the Americans with Disabilities Act (ADA).
13. These plans shall be used in conjunction with Town of Plainfield standards, refer to sheet 1 of 25 for "directions for use."
14. Refer to general note #11 on sheet 1 of 25 of the Town of Plainfield standards for "Land Disturbing Mitigation Options".

PLAN NOTES

- (A) HEAVY DUTY ASPHALT, SEE DETAIL 1/C500
- (B) LIGHT DUTY ASPHALT, SEE DETAIL 2/C500
- (C) CONCRETE PAVEMENT, SEE DETAIL 3/C500
- (D) CONCRETE SIDEWALK, SEE LANDSCAPE PLANS FOR DETAILS
- (E) INTEGRAL CURB / WALK, SEE LANDSCAPE PLANS FOR DETAILS
- (F) 6" STANDING CURB, SEE DETAIL 5/C500
- (G) 2' COMBINED CURB & GUTTER, SEE DETAIL ON SHEET 03 OF 25 OF THE TOWN OF PLAINFIELD DETAILS.
- (H) HANDICAP RAMP, SEE LANDSCAPE PLANS FOR DETAILS
- (I) HANDICAP SIGN, SEE DETAIL 8/C500
- PAINTED HANDICAP SYMBOL, SEE DETAIL 9/C500
- (J) 4" PAINED BLUE PAVEMENT MARKINGS
- (K) 2' WIDE WHITE THERMOPLASTIC STOP BAR
- (L) 4" WHITE THERMOPLASTIC PAVEMENT MARKINGS
- PAINTED WHITE PAVEMENT DIRECTIONAL MARKINGS
- (M) MILL EXISTING PAVEMENT, SEE DETAIL 6/C500
- (N) CONCRETE COLLAR, SEE DETAIL 7/C500
- (O) PIPE BOLLARD, SEE DETAIL 10/C500
- (P) RETAINING WALL, SEE ARCHITECT PLANS FOR DETAILS
- (Q) PARKING BUMPER, SEE DETAIL 4/C500
- (R) REINFORCED CONCRETE GUTTER, SEE DETAIL DS-RO1 ON SHEET 04 OF 25 OF THE TOWN OF PLAINFIELD DETAILS
- (S) FENCE, SEE LANDSCAPE PLAN FOR DETAILS
- (T) BICYCLE RACKS, SEE LANDSCAPE PLAN FOR DETAILS
- (U) FLAG POLE /W LIGHTS, SEE LANDSCAPE PLAN FOR DETAILS
- (V) MILL EXISTING PAVEMENT 1.5" & REPLACE W/ 220 lbs/sys, QC/AQ-HMA, 2, 64,SURFACE, 12.55mm
- (W) ASPHALT TRAIL, SEE DETAIL DS-C06 ON SHEET 07 OF 25 OF THE TOWN OF PLAINFIELD DETAILS
- (X) COMMERCIAL PRIVATE DRIVE PAVEMENT, SEE DETAIL DS-R01 & DS-R05 ON SHEET 04 OF 25 OF THE TOWN OF PLAINFIELD DETAILS

MADE @ PLAINFIELD

BANNING ENGINEERING
853 COLUMBIA ROAD, SUITE #101
PLAINFIELD, IN 46168
BUS: (317) 707-3800 FAX: (317) 707-3800
E-MAIL: Banning@BanningEngineering.com
WEB: www.BanningEngineering.com

MADE@ PLAINFIELD
TOWN OF PLAINFIELD
Red Pride Drive, Plainfield, IN 46168

SCOPE DRAWINGS:
These drawings indicate the general scope of the project in terms of architectural design concept, the dimensions of the building, the major architectural elements and the type of structural, mechanical and electrical systems.
The drawings do not necessarily indicate or describe all work required for the performance and completion of the requirements of the Contract.
On the basis of the general scope indicated or described, the trade contractors shall furnish all items required for the proper execution and completion of the work.

REVISIONS:
ADDENDUM #1 - DPW COMMENTS 01-30-2020

ISSUE DATE	DRAWN BY	CHECKED BY
01/16/2020	SJH	RRL

DRAWING TITLE:
SITE LAYOUT PLAN

CERTIFIED BY:
W. CHAD ZIEGLER
REGISTERED No. PE11200667 STATE OF INDIANA
PROFESSIONAL ENGINEER

DRAWING NUMBER
C103

PROJECT NUMBER
19002

shapes P:\2019\19002\Engineering\Codd\Sheet Files\Construction Plans\19002_cp_slit.dwg Jan 30, 2020 - 10:57am

PLAN NOTES

- (A) HEAVY DUTY ASPHALT, SEE DETAIL 1/C500
- (B) LIGHT DUTY ASPHALT, SEE DETAIL 2/C500
- (C) CONCRETE PAVEMENT, SEE DETAIL 3/C500
- (D) CONCRETE SIDEWALK, SEE LANDSCAPE PLANS FOR DETAILS
- (E) INTEGRAL CURB / WALK, SEE LANDSCAPE PLANS FOR DETAILS
- (F) 6" STANDING CURB, SEE DETAIL 5/C500
- (G) 2' COMBINED CURB & GUTTER, SEE DETAIL ON SHEET 03 OF 25 OF THE TOWN OF PLAINFIELD DETAILS.
- (H) HANDICAP RAMP, SEE LANDSCAPE PLANS FOR DETAILS
- (I) HANDICAP SIGN, SEE DETAIL 8/C500
- PAINTED HANDICAP SYMBOL, SEE DETAIL 9/C500
- (J) 4" PAINED BLUE PAVEMENT MARKINGS
- (K) 2' WIDE WHITE THERMOPLASTIC STOP BAR
- (L) 4" WHITE THERMOPLASTIC PAVEMENT MARKINGS
- PAINTED WHITE PAVEMENT DIRECTIONAL MARKINGS
- (M) MILL EXISTING PAVEMENT, SEE DETAIL 6/C500
- (N) CONCRETE COLLAR, SEE DETAIL 7/C500
- (O) PIPE BOLLARD, SEE DETAIL 10/C500
- (P) RETAINING WALL, SEE ARCHITECT PLANS FOR DETAILS
- (Q) PARKING BUMPER, SEE DETAIL 4/C500
- (R) REINFORCED CONCRETE GUTTER, SEE DETAIL DS-RO1 ON SHEET 04 OF 25 OF THE TOWN OF PLAINFIELD DETAILS
- (S) FENCE, SEE LANDSCAPE PLAN FOR DETAILS
- (T) BICYCLE RACKS, SEE LANDSCAPE PLAN FOR DETAILS
- (U) FLAG POLE /W LIGHTS, SEE LANDSCAPE PLAN FOR DETAILS
- (V) MILL EXISTING PAVEMENT 1.5" & REPLACE W/ 220 lbs/sys, QC/AQ-HMA, 2, 64,SURFACE, 12.55mm
- (W) ASPHALT TRAIL, SEE DETAIL DS-G06 ON SHEET 07 OF 25 OF THE TOWN OF PLAINFIELD DETAILS
- (X) COMMERCIAL PRIVATE DRIVE PAVEMENT, SEE DETAIL DS-R01 & DS-R05 ON SHEET 04 OF 25 OF THE TOWN OF PLAINFIELD DETAILS

DIMENSIONS ARE TO THE INSIDE FACE OF CURB UNLESS NOTED OTHERWISE.

PARKING SPACES ARE 9' WIDE UNLESS NOTED OTHERWISE.

PAVEMENT MARKINGS ARE TO BE 4" PAINTED WHITE UNLESS NOTED OTHERWISE

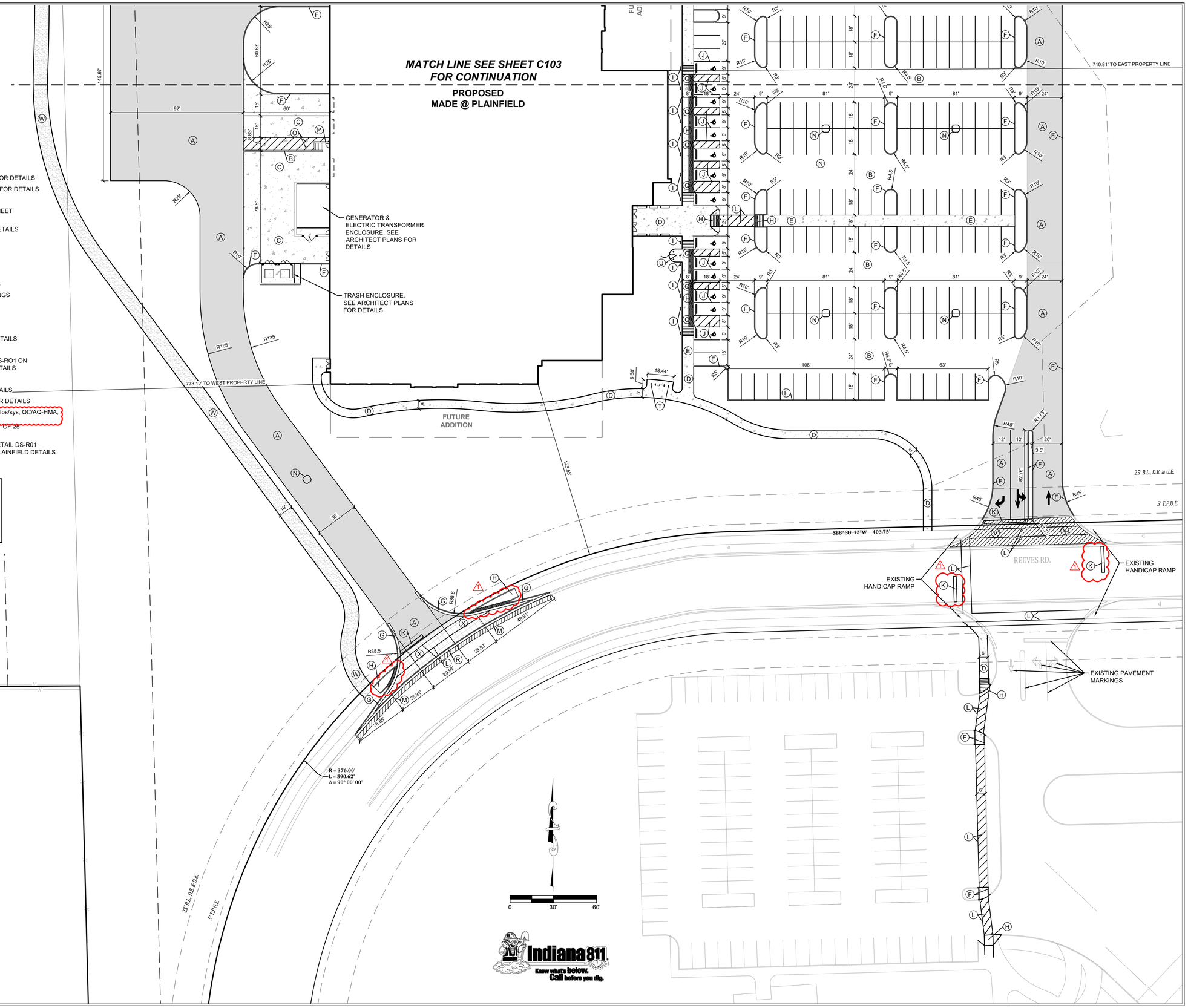

MADE @ PLAINFIELD

BANNING ENGINEERING
853 COLUMBIA ROAD, SUITE #101
PLAINFIELD, IN 46168
BUS: (317) 707-8700 FAX: (317) 707-3800
E-MAIL: Banning@BanningEngineering.com
WEB: www.BanningEngineering.com

MADE@ PLAINFIELD
TOWN OF PLAINFIELD
Red Pride Drive, Plainfield, IN 46168

SCOPE DRAWINGS:
These drawings indicate the general scope of the project in terms of architectural design concept, the dimensions of the building, the major architectural elements and the type of structural, mechanical and electrical systems.
The drawings do not necessarily indicate or describe all work required for full performance and completion of the requirements of the Contract.
On the basis of the general scope indicated or described, the trade contractors shall furnish all items required for the proper execution and completion of the work.

REVISIONS:
ADDENDUM #1 - DPW COMMENTS 01-30-2020

ISSUE DATE	DRAWN BY	CHECKED BY
01/16/2020	SJH	RRL

DRAWING TITLE:
SITE LAYOUT PLAN

CERTIFIED BY:
W. CHAD ZIEGLER REGISTERED No. PE11200667 STATE OF INDIANA PROFESSIONAL ENGINEER

DRAWING NUMBER
C104

PROJECT NUMBER
19002

shayes P:\2019\19002\Engineering\Codd\Sheet Files\Construction Plans\19002_cp_sit.dwg Jan 30, 2020 - 10:57am

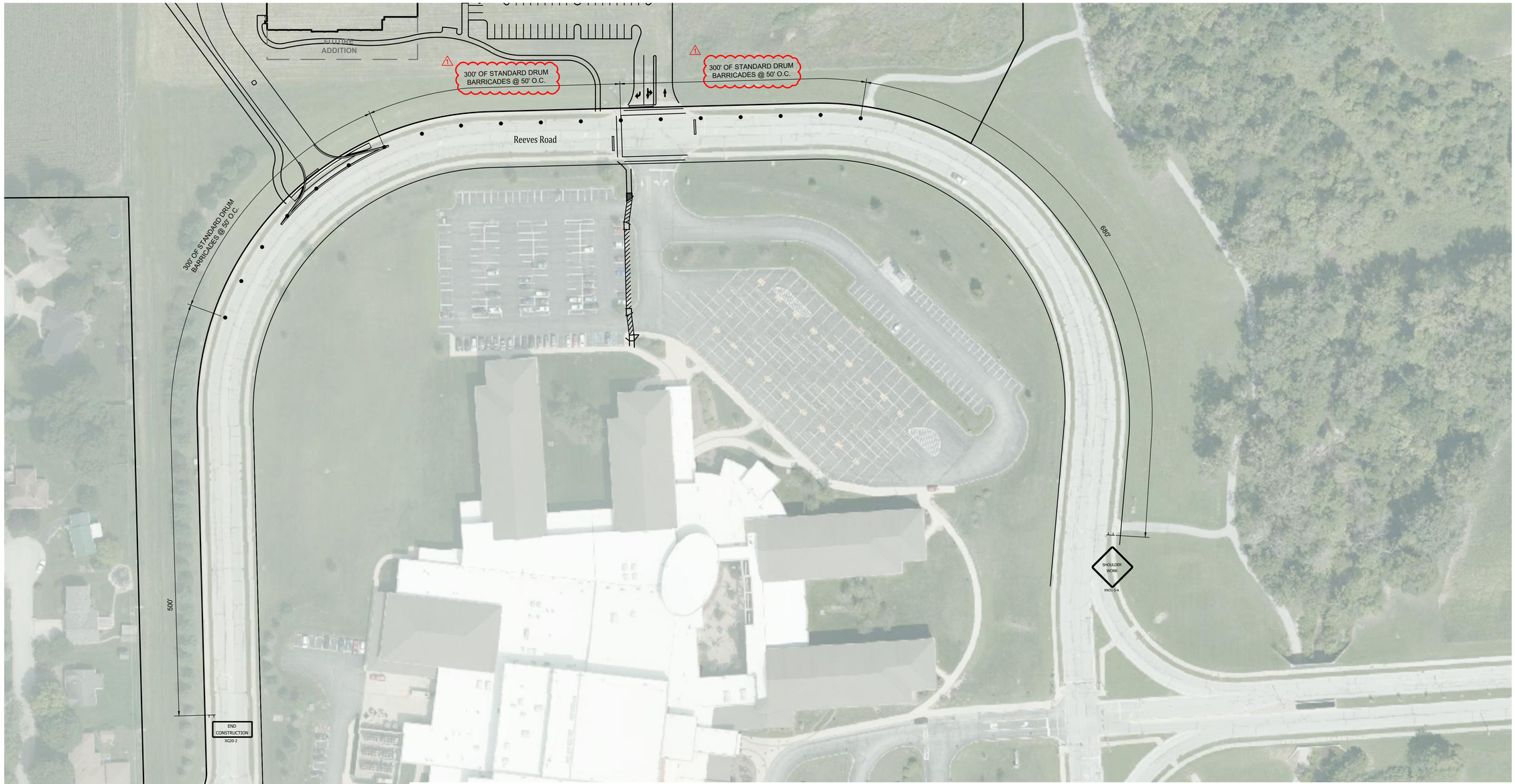

NOTES
ALL PAVEMENT CONSTRUCTION TO COMPLY WITH THE LATEST REVISED "STANDARD SPECIFICATIONS" OF THE INDIANA DEPARTMENT OF TRANSPORTATION. ALL MATERIALS USED WITHIN THE STATE HIGHWAY RIGHT-OF-WAY TO BE SUPPLIED BY STATE APPROVED SUPPLIERS.

TRAFFIC CONTROL MUST BE IN ACCORDANCE WITH THE CONSTRUCTION AND MAINTENANCE SECTION OF THE INDIANA MANUAL OF UNIFORM TRAFFIC CONTROL DEVISES.

CONSTRUCTION RESTRICTED TO DAYLIGHT HOURS ONLY.

EXISTING SECTION OF REEVES ROAD CONSISTS OF
2 - 14' TRAVEL LANES (1 EACH WAY) & 12' MIDDLE TURN LANE
RIGHT-OF-WAY: 70' R/W EXISTS
DESIGN SPEED LIMIT: 30 MPH
POSTED SPEED LIMIT: 30 MPH

CONTRACTOR TO UTILIZE FLAGGERS AS REQUIRED FOR CONSTRUCTION.

0 60' 120'

Indiana 811
Know what's below. Call before you dig.

MADE @ PLAINFIELD

BANNING ENGINEERING
853 COLUMBIA ROAD, SUITE #101
PLAINFIELD, IN 46168
BUS: (317) 707-3800 FAX: (317) 707-3800
E-MAIL: Banning@BanningEngineering.com
WEB: www.BanningEngineering.com

MADE@ PLAINFIELD
TOWN OF PLAINFIELD
Red Pride Drive, Plainfield, IN 46168

SCOPE DRAWINGS:
These drawings indicate the general scope of the project in terms of architectural design concept, the dimensions of the building, the major architectural elements and the type of construction and mechanical and electrical systems.
The drawings do not necessarily indicate or describe all work required for full performance and completion of the requirements of the Contract.
On the basis of the general scope indicated or described, the trade contractors shall furnish all items required for the proper execution and completion of the work.

REVISIONS:
ADDENDUM #1 - DPW COMMENTS
01-30-2020

ISSUE DATE	DRAWN BY	CHECKED BY
01/16/2020	SJH	RRL

DRAWING TITLE:
TRAFFIC MAINTENANCE PLAN

CERTIFIED BY:
W. CHAD ZIEGLER
REGISTERED No. PE11200667 STATE OF INDIANA
PROFESSIONAL ENGINEER

DRAWING NUMBER
C200

PROJECT NUMBER
19002

shayes P:\2019\19002\Engineering\Cadd\Sheet Files\Construction Plans\19002_cp_trf.dwg Jan 30, 2020 - 10:59am

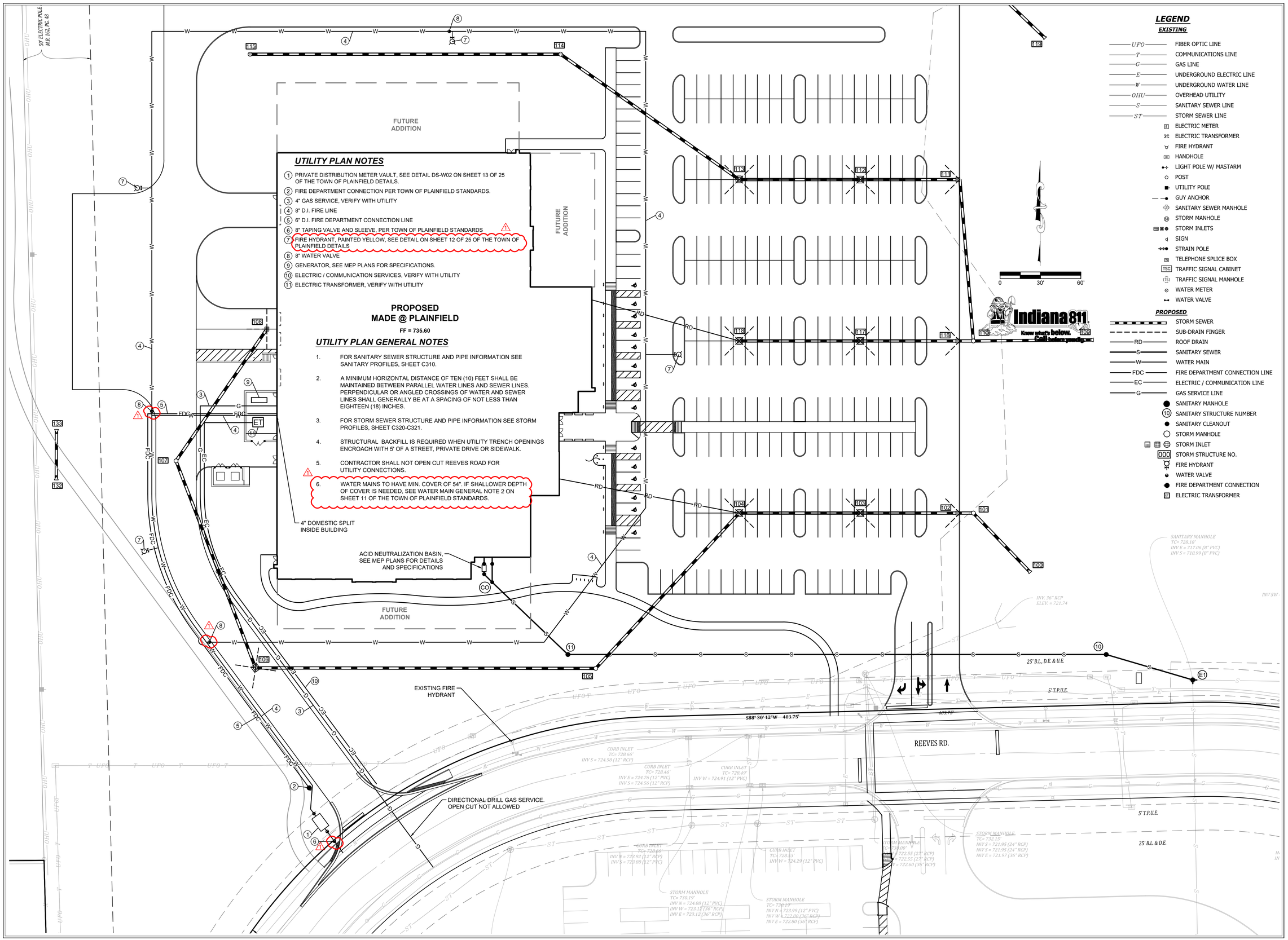

LEGEND

EXISTING

- UFO — FIBER OPTIC LINE
- T — COMMUNICATIONS LINE
- G — GAS LINE
- E — UNDERGROUND ELECTRIC LINE
- W — UNDERGROUND WATER LINE
- OHU — OVERHEAD UTILITY
- S — SANITARY SEWER LINE
- ST — STORM SEWER LINE
- ELECTRIC METER
- ELECTRIC TRANSFORMER
- FIRE HYDRANT
- HANDHOLE
- LIGHT POLE W/ MASTARM
- POST
- UTILITY POLE
- GUY ANCHOR
- SANITARY SEWER MANHOLE
- STORM MANHOLE
- STORM INLETS
- SIGN
- STRAIN POLE
- TELEPHONE SPLICE BOX
- TSC — TRAFFIC SIGNAL CABINET
- TS — TRAFFIC SIGNAL MANHOLE
- WATER METER
- WATER VALVE

PROPOSED

- STORM SEWER
- SUB-DRAIN FINGER
- RD — ROOF DRAIN
- S — SANITARY SEWER
- W — WATER MAIN
- FDC — FIRE DEPARTMENT CONNECTION LINE
- EC — ELECTRIC / COMMUNICATION LINE
- G — GAS SERVICE LINE
- SANITARY MANHOLE
- 10 — SANITARY STRUCTURE NUMBER
- SANITARY CLEANOUT
- STORM MANHOLE
- STORM INLET
- 000 — STORM STRUCTURE NO.
- FIRE HYDRANT
- WATER VALVE
- FIRE DEPARTMENT CONNECTION
- ELECTRIC TRANSFORMER

UTILITY PLAN NOTES

1. PRIVATE DISTRIBUTION METER VAULT, SEE DETAIL DS-W02 ON SHEET 13 OF 25 OF THE TOWN OF PLAINFIELD DETAILS.
2. FIRE DEPARTMENT CONNECTION PER TOWN OF PLAINFIELD STANDARDS.
3. 4" GAS SERVICE, VERIFY WITH UTILITY
4. 8" D.I. FIRE LINE
5. 6" D.I. FIRE DEPARTMENT CONNECTION LINE
6. 8" TAPING VALVE AND SLEEVE, PER TOWN OF PLAINFIELD STANDARDS
7. FIRE HYDRANT, PAINTED YELLOW, SEE DETAIL ON SHEET 12 OF 25 OF THE TOWN OF PLAINFIELD DETAILS
8. 8" WATER VALVE
9. GENERATOR, SEE MEP PLANS FOR SPECIFICATIONS.
10. ELECTRIC / COMMUNICATION SERVICES, VERIFY WITH UTILITY
11. ELECTRIC TRANSFORMER, VERIFY WITH UTILITY

UTILITY PLAN GENERAL NOTES

1. FOR SANITARY SEWER STRUCTURE AND PIPE INFORMATION SEE SANITARY PROFILES, SHEET C310.
2. A MINIMUM HORIZONTAL DISTANCE OF TEN (10) FEET SHALL BE MAINTAINED BETWEEN PARALLEL WATER LINES AND SEWER LINES. PERPENDICULAR OR ANGLED CROSSINGS OF WATER AND SEWER LINES SHALL GENERALLY BE AT A SPACING OF NOT LESS THAN EIGHTEEN (18) INCHES.
3. FOR STORM SEWER STRUCTURE AND PIPE INFORMATION SEE STORM PROFILES, SHEET C320-C321.
4. STRUCTURAL BACKFILL IS REQUIRED WHEN UTILITY TRENCH OPENINGS ENCROACH WITH 5' OF A STREET, PRIVATE DRIVE OR SIDEWALK.
5. CONTRACTOR SHALL NOT OPEN CUT REEVES ROAD FOR UTILITY CONNECTIONS.
6. WATER MAINS TO HAVE MIN. COVER OF 54". IF SHALLOWER DEPTH OF COVER IS NEEDED, SEE WATER MAIN GENERAL NOTE 2 ON SHEET 11 OF THE TOWN OF PLAINFIELD STANDARDS.

BANNING ENGINEERING
853 COLUMBIA ROAD, SUITE #101
PLAINFIELD, IN 46168
BUS.: (317) 707-8960 FAX: (317) 707-3800
E-MAIL: Banning@BanningEngineering.com
WEB: www.BanningEngineering.com

MADE@ PLAINFIELD
TOWN OF PLAINFIELD
Red Pride Drive, Plainfield, IN 46168

SCOPE DRAWINGS:

These drawings indicate the general scope of the project in terms of architectural design concept, the dimensions of the building, the major architectural elements and the type of structural, mechanical and electrical systems.

The drawings do not necessarily indicate or describe all work required for the proper execution and completion of the requirements of the Contract.

On the basis of the general scope indicated or described, the trade contractors shall furnish all items required for the proper execution and completion of the work.

REVISIONS:
ADDENDUM #1 - DPW COMMENTS
01-30-2020

ISSUE DATE	DRAWN BY	CHECKED BY
01/16/2020	SJH	RRL

DRAWING TITLE:
UTILITY PLAN

CERTIFIED BY:
W. CHAD ZIEGLER
REGISTERED No. PE11200667 STATE OF INDIANA
PROFESSIONAL ENGINEER

DRAWING NUMBER
C300

PROJECT NUMBER
19002

shayes P:\2019\19002\Engineering\Cadd\Sheet Files\Construction Plans\19002_cp_util.dwg Jan 30, 2020 - 10:59am

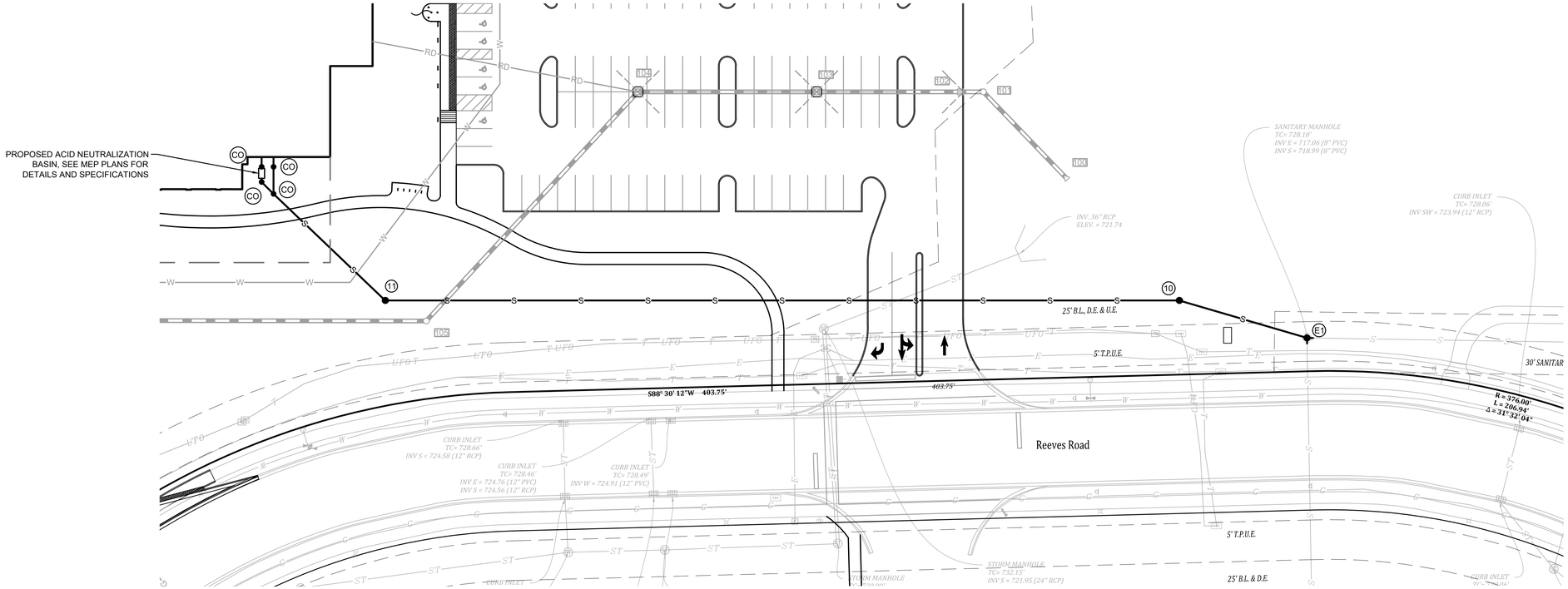

SANITARY SEWER PLAN GENERAL NOTES

1. All sewers, manholes and castings shall be per Town of Plainfield specifications. For details see sheets 14 - 18 of 25 of the Town of Plainfield Details
2. It shall be the contractors responsibility to field verify all utility locations before any construction begins.
3. All construction activity on this site are to be performed in compliance with OSHA standards.
4. There is to be a minimum of 10 feet horizontal separation and 18 inches vertical separation between the sanitary sewer and the water line.
5. Any sanitary sewer and storm sewer crossings with less than 2 feet of vertical separation shall be concrete encased.
6. All sanitary sewer mains 15 feet and deeper use SDR 26 pipe. All other sanitary sewer mains use SDR 35 pipe.
7. Sanitary Laterals shall SDR 26 pipe with a minimum slope of 1/4" per foot.
8. Laterals shown are approximate, final location and connection to buildings to be determined by the Developer.
9. Sanitary lateral saddle taps shall comply with detail DS-S02 on sheet 17 of 25 of the Town of Plainfield standard details.
10. Sanitary laterals shall be PVC SDR 26 per detail DS-S01on sheet 17 of 25 of the Town of Plainfield standard details.
11. See detail DS-S07 on sheet 17 of 25 of the Town of Plainfield standard details for sanitary cleanout.

GRANULAR BACKFILL PER PLAINFIELD STANDARDS

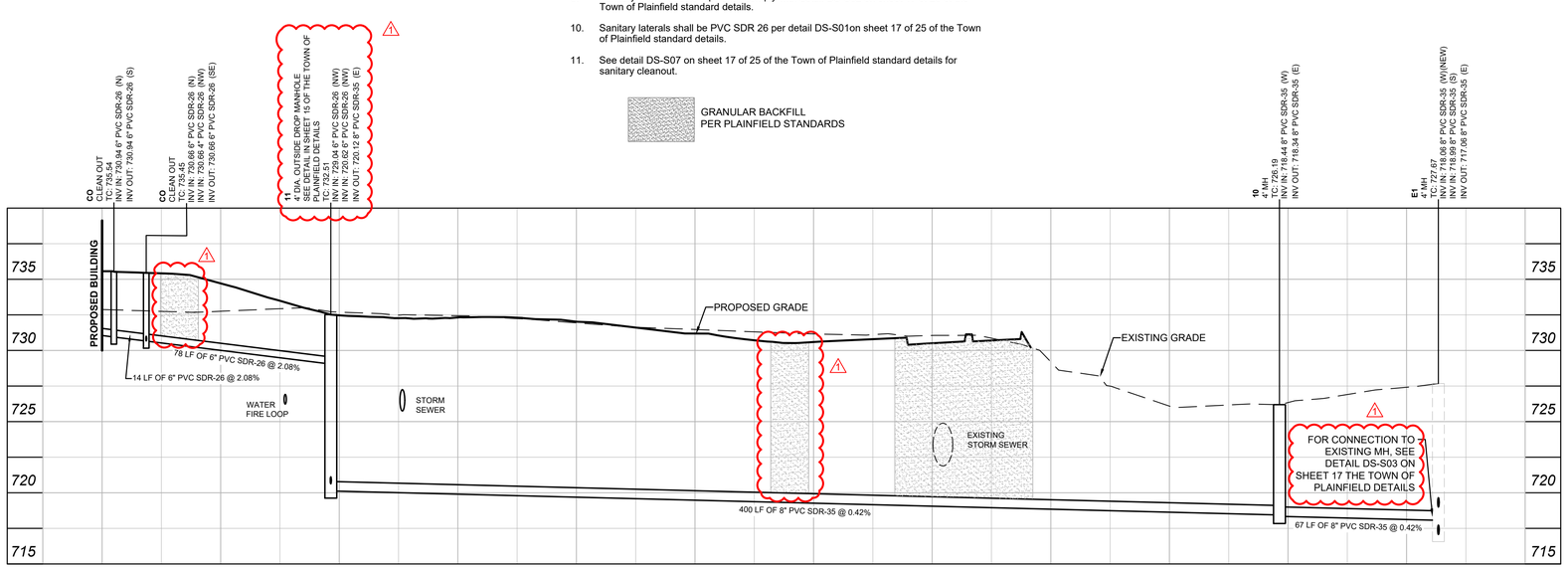

SANITARY SEWER

LEGEND

EXISTING

- UFO — FIBER OPTIC LINE
- T — COMMUNICATIONS LINE
- G — GAS LINE
- E — UNDERGROUND ELECTRIC LINE
- W — UNDERGROUND WATER LINE
- OHU — OVERHEAD UTILITY
- S — SANITARY SEWER LINE
- ST — STORM SEWER LINE
- ELECTRIC METER
- ELECTRIC TRANSFORMER
- FIRE HYDRANT
- HANDHOLE
- LIGHT POLE W/ MASTARM
- POST
- UTILITY POLE
- GUY ANCHOR
- SANITARY SEWER MANHOLE
- STORM MANHOLE
- STORM INLETS
- SIGN
- STRAIN POLE
- TELEPHONE SPLICE BOX
- TSC — TRAFFIC SIGNAL CABINET
- TS — TRAFFIC SIGNAL MANHOLE
- WATER METER
- WATER VALVE

LEGEND

PROPOSED

- STORM SEWER
- SUB-DRAIN FINGER
- RD — ROOF DRAIN
- S — SANITARY SEWER
- W — WATER MAIN
- FDC — FIRE DEPARTMENT CONNECTION LINE
- EC — ELECTRIC / COMMUNICATION LINE
- G — GAS SERVICE LINE
- SANITARY STRUCTURE
- 10 — SANITARY STRUCTURE NO.
- STORM MANHOLE
- STORM INLET
- 000 — STORM STRUCTURE NO.
- FIRE HYDRANT
- WATER VALVE
- FIRE DEPARTMENT CONNECTION
- ELECTRIC TRANSFORMER

BANNING ENGINEERING
853 COLUMBIA ROAD, SUITE #101
PLAINFIELD, IN 46168
BUS: (317) 707-8960 FAX: (317) 707-3800
E-MAIL: Banning@BanningEngineering.com
WEB: www.BanningEngineering.com

MADE@ PLAINFIELD
TOWN OF PLAINFIELD
Red Pride Drive, Plainfield, IN 46168

SCOPE DRAWINGS:
These drawings indicate the general scope of the project in terms of architectural design concept, the dimensions of the building, the major architectural elements and the type of structural, mechanical and electrical systems.
The drawings do not necessarily indicate or describe all work required for the performance and completion of the requirements of the Contract.
On the basis of the general scope indicated or described the trade contractors shall furnish all items required for the proper execution and completion of the work.

REVISIONS:
ADDENDUM #1 - DPW COMMENTS
01-30-2020

ISSUE DATE	DRAWN BY	CHECKED BY
01/16/2020	SJH	RRL

DRAWING TITLE:
SANITARY SEWER PLAN & PROFILE

CERTIFIED BY:
W. CHAD ZIEGLER
REGISTERED No. PE11200667 STATE OF INDIANA
PROFESSIONAL ENGINEER

DRAWING NUMBER
C310

PROJECT NUMBER
19002

athoyes P:\2019\19002\Engineering\Cadd\Sheet Files\Construction Plans\19002_cp_san.dwg Jan 30, 2020 - 11:38am

STORM SEWER PLAN GENERAL NOTES

1. All sewers, manholes and castings shall be per Town of Plainfield specifications.
2. It shall be the contractors responsibility to field verify all utility locations before any construction begins.
3. All construction activity on this site are to be performed in compliance with OSHA standards.
4. There is to be a minimum of 10 feet horizontal separation and 18 inches vertical separation between the sanitary sewer and the water line.
5. Any sanitary sewer and storm sewer crossings with less than 2 feet of vertical separation shall be concrete encased.
6. All Casting to meet the Town of Plainfield Standard Details, Sheet 10 of 25.
   Flat Casting = Detail DS-D04
   Solid Casting = Detail DS-D07
   Beehive Casting = Detail DS-06
   Curb Casting = Detail DS-02
7. Structure backfill is required when utility trench openings encroach with 5' of a street, private drive or sidewalk.

GRANULAR BACKFILL
PER PLAINFIELD STANDARDS

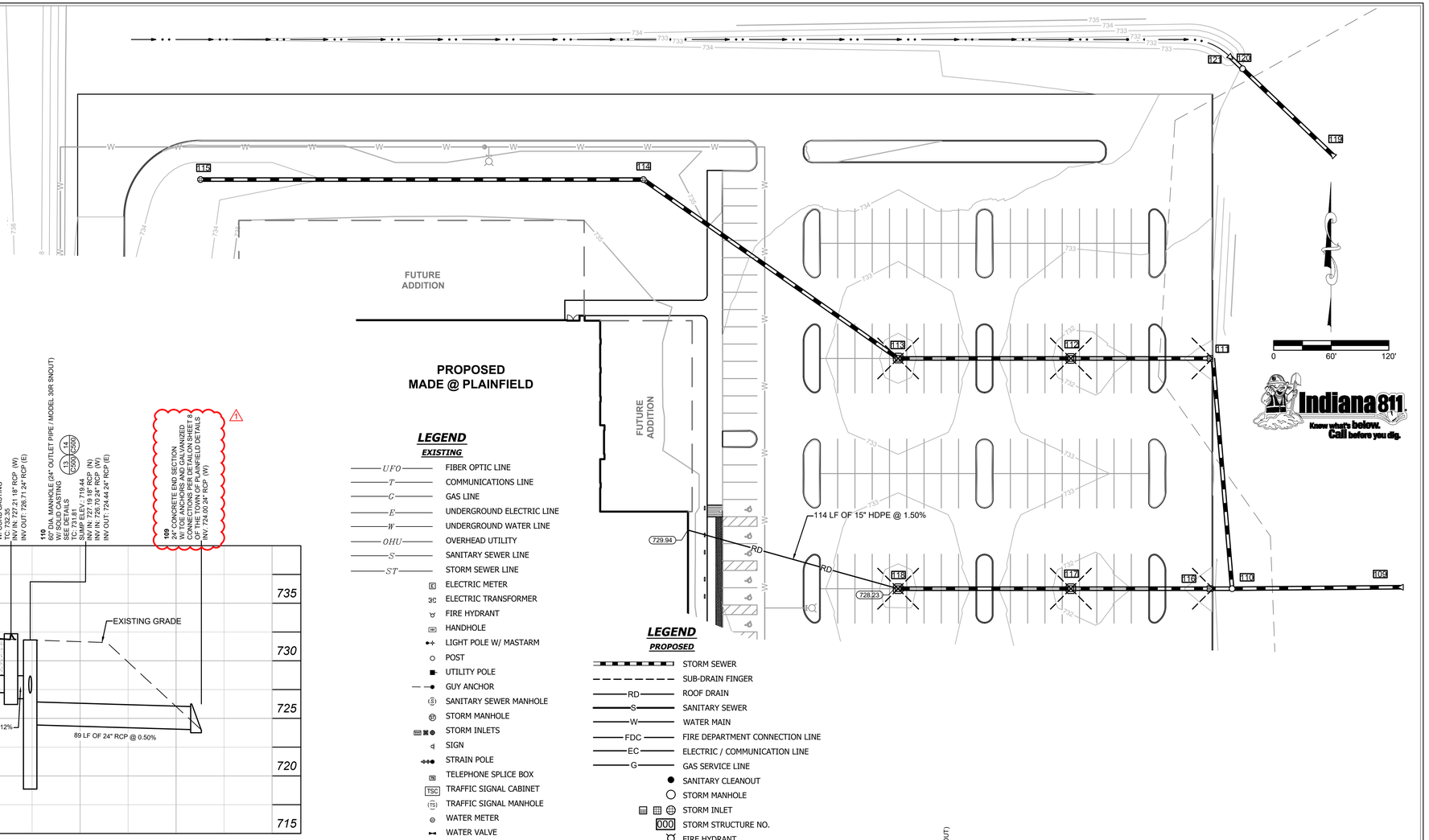

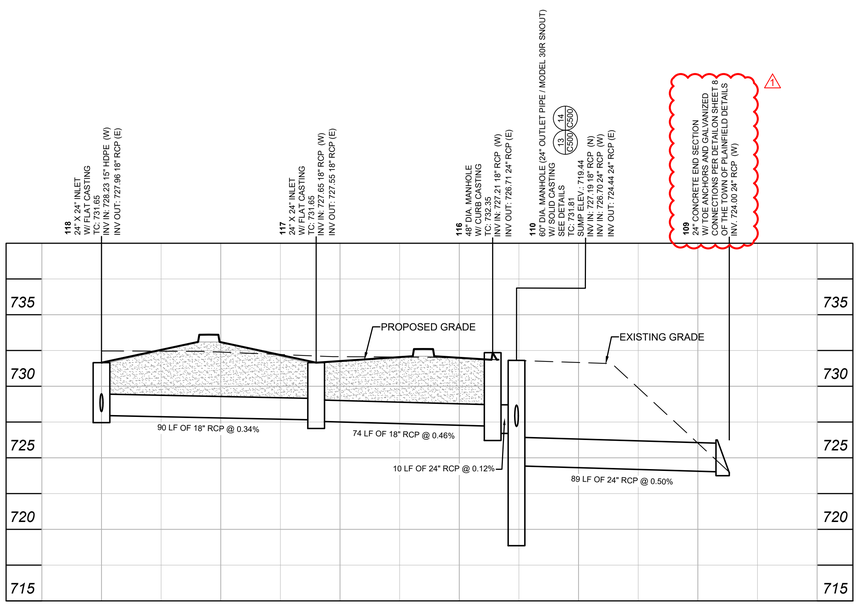

STORM STRS 118-109

LEGEND
EXISTING

- UFO — FIBER OPTIC LINE
- T — COMMUNICATIONS LINE
- G — GAS LINE
- E — UNDERGROUND ELECTRIC LINE
- W — UNDERGROUND WATER LINE
- OHU — OVERHEAD UTILITY
- S — SANITARY SEWER LINE
- ST — STORM SEWER LINE
- ELECTRIC METER
- ELECTRIC TRANSFORMER
- FIRE HYDRANT
- HANDHOLE
- LIGHT POLE W/ MASTARM
- POST
- UTILITY POLE
- GUY ANCHOR
- SANITARY SEWER MANHOLE
- STORM MANHOLE
- STORM INLETS
- SIGN
- STRAIN POLE
- TELEPHONE SPLICE BOX
- TSC — TRAFFIC SIGNAL CABINET
- TS — TRAFFIC SIGNAL MANHOLE
- WATER METER
- WATER VALVE

LEGEND
PROPOSED

- STORM SEWER
- SUB-DRAIN FINGER
- RD — ROOF DRAIN
- S — SANITARY SEWER
- W — WATER MAIN
- FDC — FIRE DEPARTMENT CONNECTION LINE
- EC — ELECTRIC / COMMUNICATION LINE
- G — GAS SERVICE LINE
- SANITARY CLEANOUT
- STORM MANHOLE
- STORM INLET
- 000 — STORM STRUCTURE NO.
- FIRE HYDRANT
- WATER VALVE
- FIRE DEPARTMENT CONNECTION
- ELECTRIC TRANSFORMER
- 727.50 — ROOF DRAIN INVERT

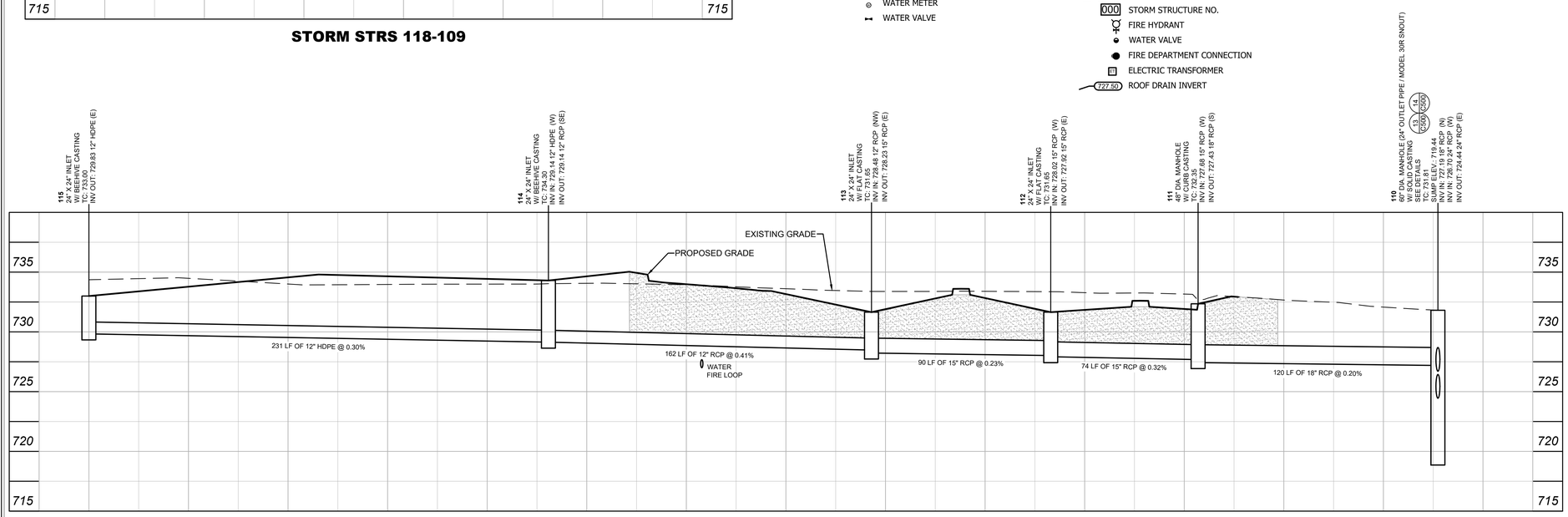

STORM STRS 115-110

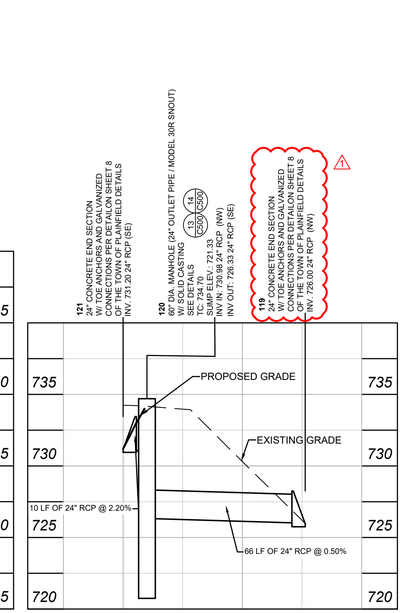

STORM STRS 121-119

BANNING ENGINEERING
853 COLUMBIA ROAD, SUITE #101
PLAINFIELD, IN. 46168
BUS.: (317) 707-3800 FAX: (317) 707-3800
E-MAIL: Banning@BanningEngineering.com
WEB: www.BanningEngineering.com

MADE@ PLAINFIELD
TOWN OF PLAINFIELD
Red Pride Drive, Plainfield, IN 46168

SCOPE DRAWINGS:
These drawings indicate the general scope of the project in terms of architectural design concept, the dimensions of the building, the major architectural elements and the type of structural, mechanical and electrical systems.
The drawings do not necessarily indicate or describe all work required for full performance and completion of the requirements of the Contract.
On the basis of the general scope indicated or described, the trade contractors shall furnish all items required for the proper execution and completion of the work.

REVISIONS:
ADDENDUM #1 - DPW COMMENTS
01-30-2020

ISSUE DATE	DRAWN BY	CHECKED BY
01/16/2020	SJH	RRL

DRAWING TITLE:
STORM SEWER PLAN & PROFILE

CERTIFIED BY:
W. CHAD ZIEGLER
REGISTERED No. PE11200667 STATE OF INDIANA
PROFESSIONAL ENGINEER

DRAWING NUMBER
C320

PROJECT NUMBER
19002

shoyes P:\2019\19002\Engineering\Cadd\Sheet Files\Construction Plans\19002_cp_stm.dwg Jan 30, 2020 - 11:00am

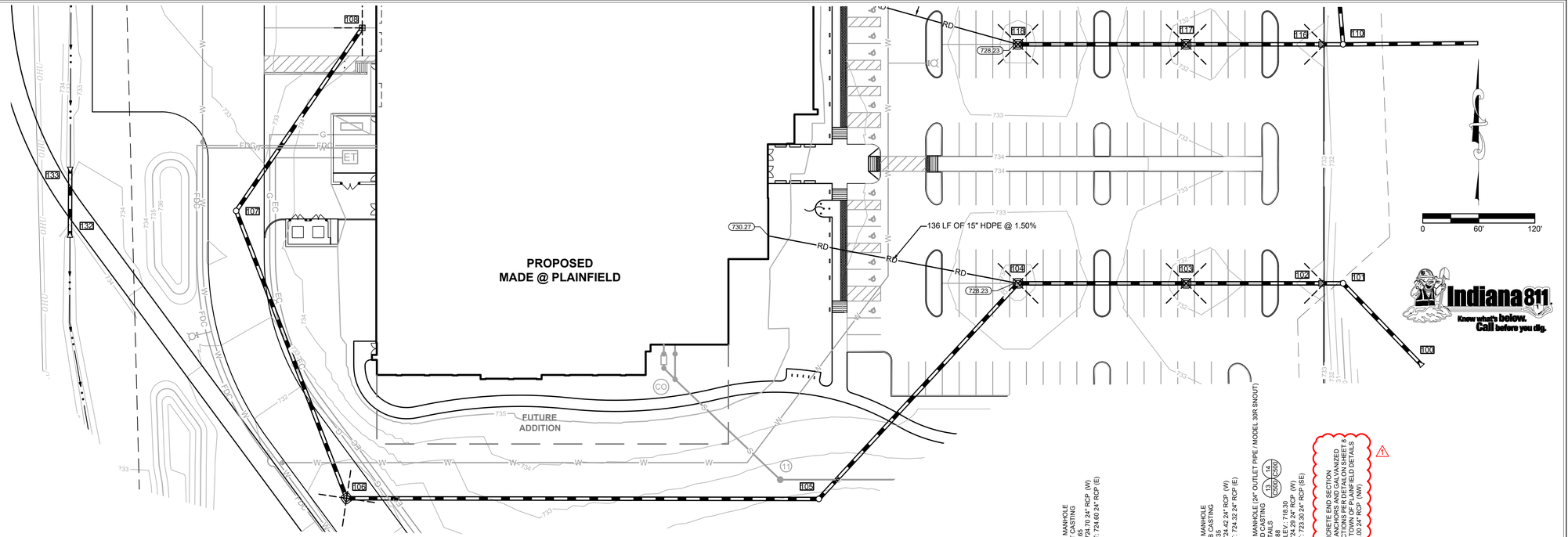

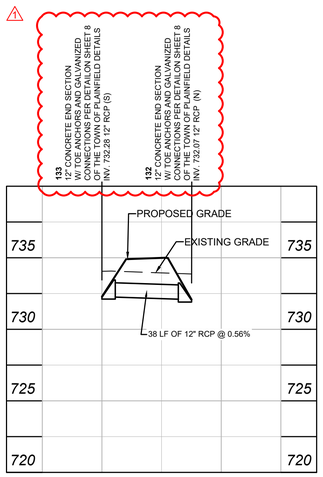

STORM STRS 133-132

STORM SEWER PLAN GENERAL NOTES

1. All sewers, manholes and castings shall be per Town of Plainfield specifications.
2. It shall be the contractors responsibility to field verify all utility locations before any construction begins.
3. All construction activity on this site are to be performed in compliance with OSHA standards.
4. There is to be a minimum of 10 feet horizontal separation and 18 inches vertical separation between the sanitary sewer and the water line.
5. Any sanitary sewer and storm sewer crossings with less than 2 feet of vertical separation shall be concrete encased.
6. All Casting to meet the Town of Plainfield Standard Details, Sheet 10 of 25.
   Flat Casting = Detail DS-D04
   Solid Casting = Detail DS-D07
   Beehive Casting = Detail DS-06
   Curb Casting = Detail DS-02
7. Structure backfill is required when utility trench openings encroach with 5' of a street, private drive or sidewalk.

GRANULAR BACKFILL
PER PLAINFIELD STANDARDS

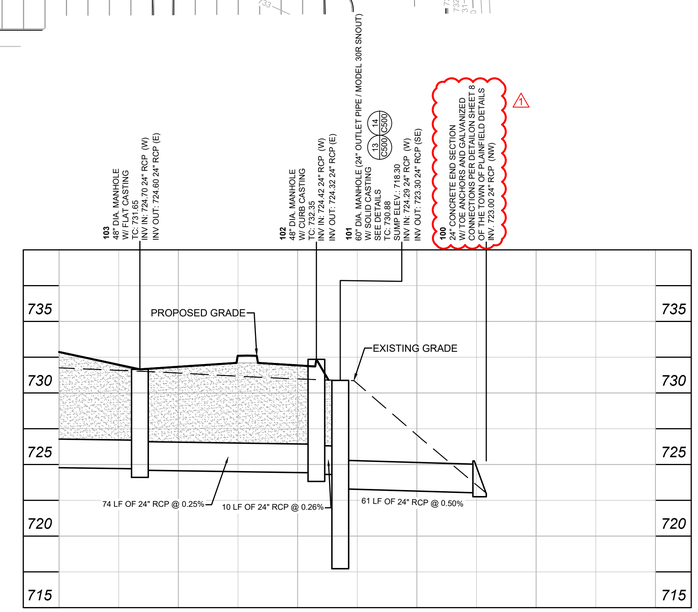

STORM STRS 108-100

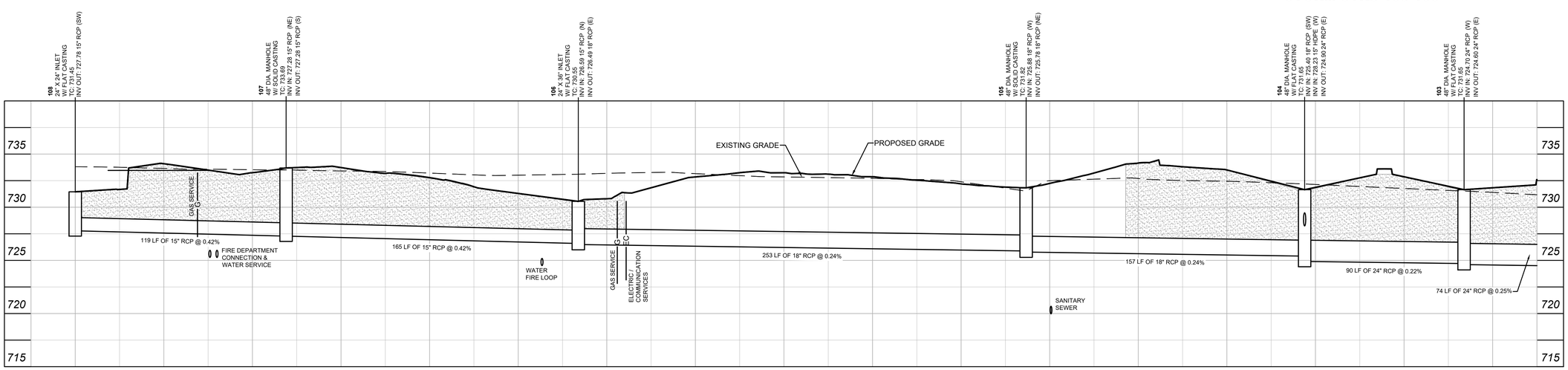

STORM STRS 108-100

MADE @ PLAINFIELD

BANNING ENGINEERING
853 COLUMBIA ROAD, SUITE #101
PLAINFIELD, IN 46168
BUS: (317) 707-8960 FAX: (317) 707-3800
E-MAIL: Banning@BanningEngineering.com
WEB: www.BanningEngineering.com

MADE@ PLAINFIELD
TOWN OF PLAINFIELD
Red Pride Drive, Plainfield, IN 46168

SCOPE DRAWINGS:
These drawings indicate the general scope of the project in terms of architectural design concept, the dimensions of the building, the major architectural elements and the type of structural, mechanical and electrical systems.
The drawings do not necessarily indicate or describe all work required for the performance and completion of the requirements of the Contract.
On the basis of the general scope indicated or described, the trade contractors shall furnish all items required for the proper execution and completion of the work.

REVISIONS:
ADDENDUM #1 - DPW COMMENTS
01-30-2020

ISSUE DATE	DRAWN BY	CHECKED BY
01/16/2020	SJH	RRL

DRAWING TITLE:
STORM SEWER PLAN & PROFILE

CERTIFIED BY:
W. CHAD ZIEGLER
REGISTERED No. PE11200667 STATE OF INDIANA
PROFESSIONAL ENGINEER

DRAWING NUMBER
C321

PROJECT NUMBER
19002

shayes P:\2019\19002\Engineering\Cadd\Sheet Files\Construction Plans\19002_cp_strm.dwg Jan 30, 2020 - 11:00am

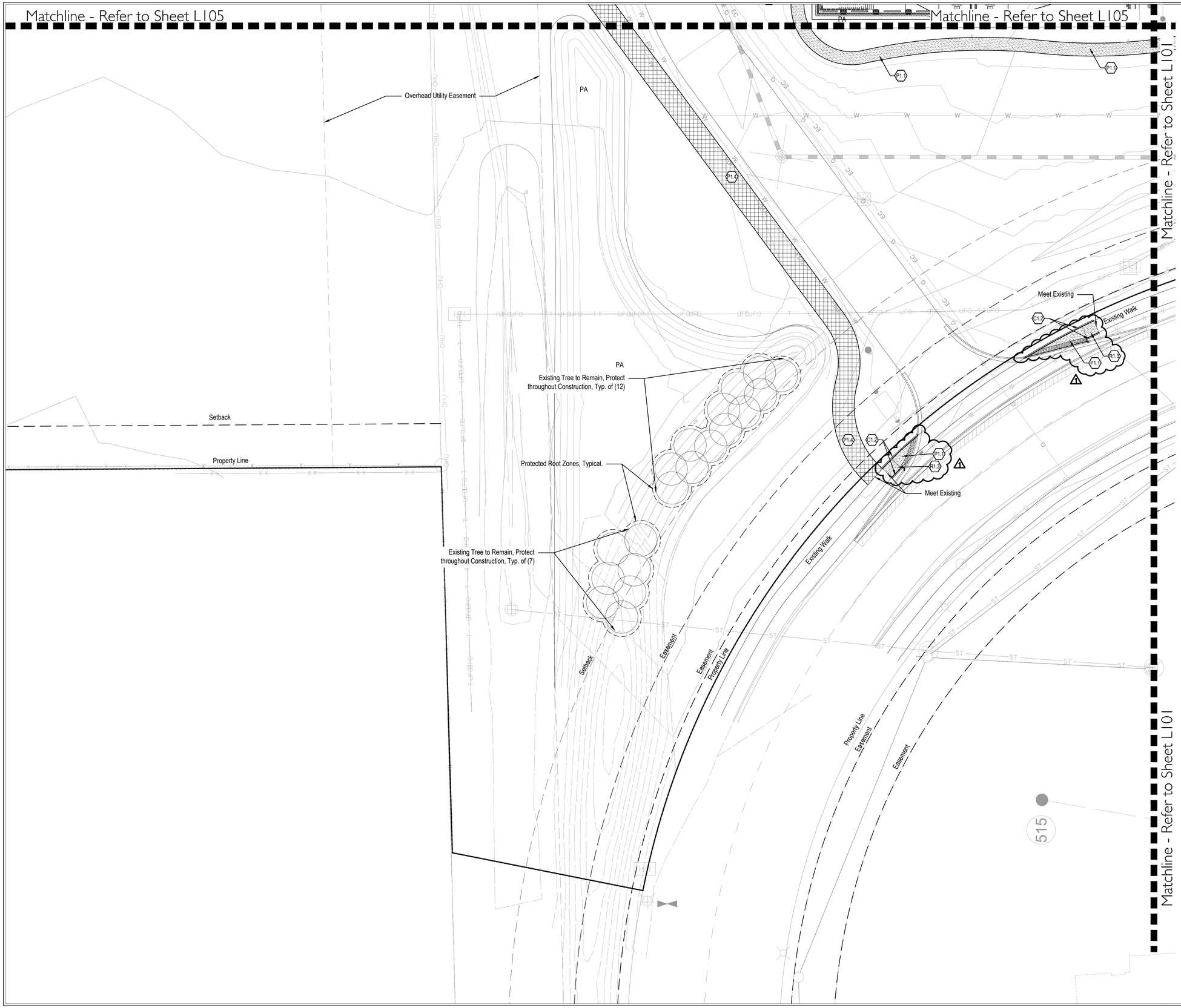

MATERIAL LEGEND

C1.0 Curbing, Refer to Specification 03 30 01

- C1.1 Integral Curb and Sidewalk, Refer to Detail 4/L501
- C1.2 Concrete Post Curb, Refer to Detail 5/L501

F1.0 Site Furnishings

- F1.1 Flag Pole, Refer to Detail 2/L502 and Specifications
- F1.2 Bike Rack, Refer to Detail 1/L502 and Specifications
- F1.3 Bench, Refer to Specifications
- F1.4 Litter Receptacle, Refer to Specifications
- F1.5 Steel Pipe Bollard, Refer to Detail 4/L502 and Specifications

F2.0 Fencing

- F2.1 6ft Metal Fence, 100% Direct Visual Screening, Refer to Detail 3/L502 and Specifications

P1.0 Pavement

- P1.1 Standard Concrete Pavement, Medium Broom Finish, Straight Sawn Joints, Refer to Details 1,2, & 3/L501 and Specifications
- P1.2 Standard Concrete Pavement, Sand Release Finish, Chamfer Sawn Joints, Refer to Details 1,2, & 3/L501 and Specifications
- P1.3 Gravel Maintenance Edge, Refer to Detail 6/L501
- P1.4 Asphalt Trail, Refer to Town Standard Detail DS-G06/Sheet 7 of 25 and Specifications

R1.0 Accessible Sidewalk Ramps, Refer to Detail 7/L501 and Town Standard Details Sheet 4 of 25

- R1.1 Flare Ramp
- R1.2 Sidewalk Ramp with Curb
- R1.3 Crosswalk Ramp

NOTE: All disturbed areas not proposed to receive pavements shall be dressed with topsoil and seeded per Specifications.

MADE @ PLAINFIELD

context DESIGN
12 S Main St, Ste 200 | Fortville, IN 46040
317-485-6900 | www.context-design.com

MADE @ PLAINFIELD
TOWN OF PLAINFIELD
Red Pride Drive, Plainfield, IN 46168

SCOPE DRAWINGS:

These drawings indicate the general scope of the project in terms of architectural design concept, the dimensions of the building, the major architectural elements and the type of structural, mechanical and electrical systems.

The drawings do not necessarily indicate or describe all work required for full performance and completion of the requirements of the Contract.

On the basis of the general scope indicated or described, the trade contractors shall furnish all items required for the proper execution and completion of the work.

REVISIONS:

Permit Review Set 01/21/2020

1 01/30/2020 ADD 01

ISSUE DATE	DRAWN BY	CHECKED BY
01/16/2020	JDS	GDW

DRAWING TITLE:

Site Materials Plan

CERTIFIED BY:

FREDDIE J. PRATEAU
REGISTERED
No. 2020-0052
STATE OF INDIANA
LANDSCAPE ARCHITECT
EXPIRES 12-31-2021

DRAWING NUMBER

L104

PROJECT NUMBER

19-1290

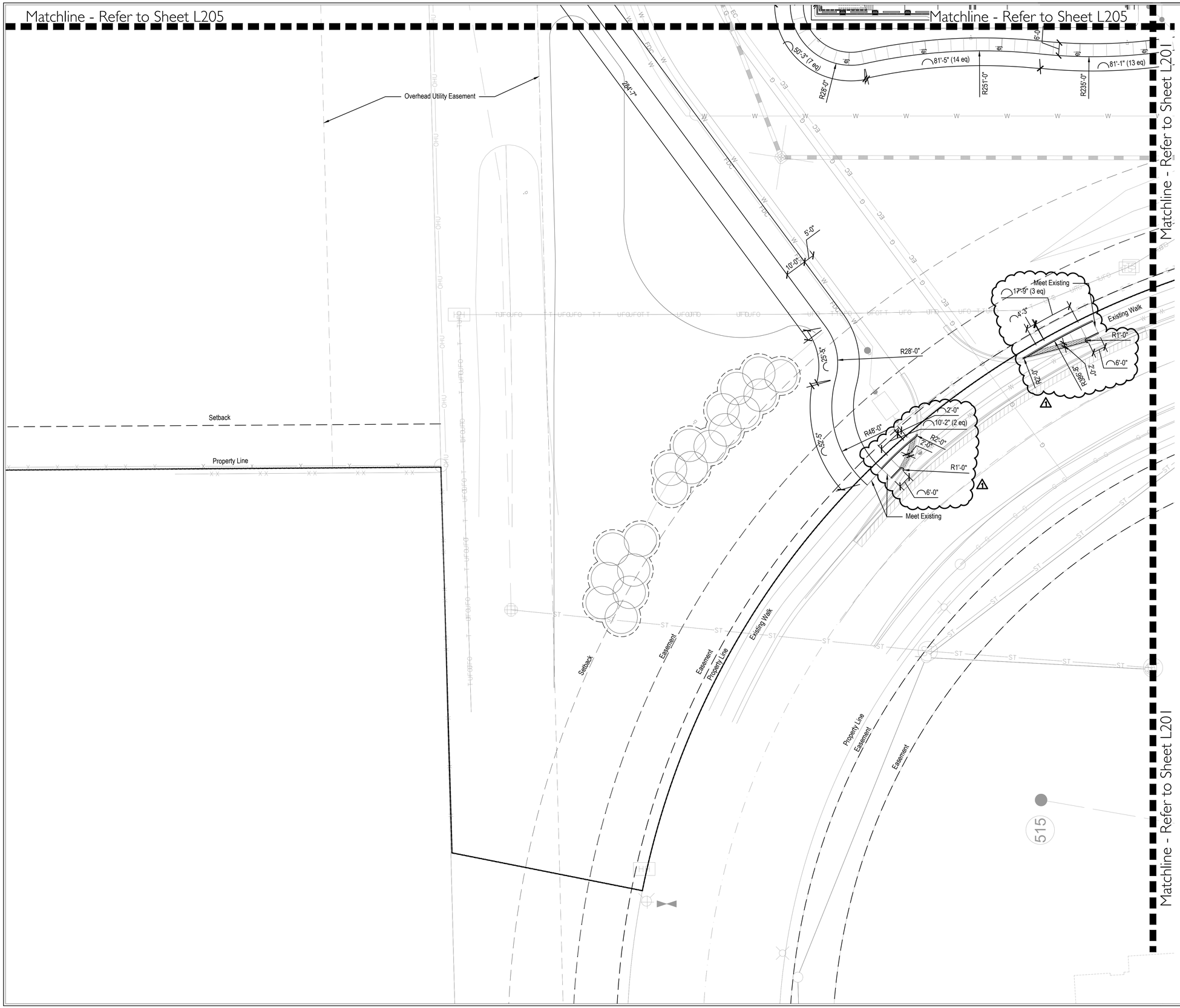

LAYOUT NOTES

1. Dimensions are shown to Face of Curb unless otherwise noted.
2. Contractor shall coordinate final joint locations in the field with the Landscape Architect. Align to existing conditions when practical, including at building and wall corners, connections to existing work, and to centerlines of doors.
3. Space control joints evenly between all bands and expansion joints as shown, unless otherwise dimensioned. Space interim joints equally whenever possible.
4. Digital AutoCAD files will be provided to the successful bidder as a courtesy to assist with field layout. The Contractor maintains all responsibility for the use, accuracy, and confirmation of such data.

MADE @ PLAINFIELD

context DESIGN
12 S Main St, Ste 200 | Fortville, IN 46040
317-485-6900 | www.context-design.com

MADE @ PLAINFIELD
TOWN OF PLAINFIELD
Red Pride Drive, Plainfield, IN 46168

SCOPE DRAWINGS:

These drawings indicate the general scope of the project in terms of architectural design concept, the dimensions of the building, the major architectural elements and the type of structural, mechanical and electrical systems.

The drawings do not necessarily indicate or describe all work required for the performance and completion of the requirements of the Contract.

On the basis of the general scope indicated or described, the trade contractors shall furnish all items required for the proper execution and completion of the work.

REVISIONS:

Permit Review Set 01/21/2020

1 01/30/2020 ADD 01

ISSUE DATE	DRAWN BY	CHECKED BY
01/16/2020	JDS	GDW

DRAWING TITLE:

Layout Plan

CERTIFIED BY:

FREDDIE J. PRAZEAU
REGISTERED
No. 2020-0052
STATE OF INDIANA
LANDSCAPE ARCHITECT
EXPIRES 12-31-2021

DRAWING NUMBER

L204

PROJECT NUMBER

19-1290

GENERAL NOTES

1. The Contractor shall be responsible for complying with all safety precautions and regulations during the work. The SER will not advise on, nor issue direction as to safety precautions and programs.
2. The Structural Drawings herein represent the finished structure. The Contractor shall provide all temporary guying and bracing required to erect and hold the structure in proper alignment until all Structural Work and connections have been completed. The investigation, design, safety, adequacy and inspection of the bracing, shoring, temporary supports, etc. is the sole responsibility of the Contractor.
3. The SER shall not be responsible for the methods, techniques and sequences of procedures to perform the Work. The supervision of the Work is the sole responsibility of the Contractor.
4. The Drawings indicate general and typical details of construction. Where conditions are not specifically shown, similar details of construction shall be used, subject to approval of the SER.
5. All structural systems which are to be composed of components to be field erected shall be supervised by the Supplier during manufacturing, delivery, handling, storage, and erection in accordance with the Supplier's instructions and requirements.
6. Loading applied to the structure during the process of construction shall not exceed the safe load-carrying capacity of the structural members. The live loads used in the design of this structure are indicated in the "Design Criteria Notes." Do not apply any construction loads until structural framing is properly connected together and until all permanent bracing is in place.
7. All ASTM and other referenced standards and codes are for the latest editions of these publications, unless noted otherwise.
8. Shop drawings and other items shall be submitted to the SER for review prior to fabrication. All Shop Drawings shall be reviewed by the Contractor before submittal. The SER's review is to be for conformance with the design concept and general compliance with the relevant Contract Documents. The SER's review does not relieve the Contractor of the sole responsibility to review, check, and coordinate the Shop Drawings prior to submission. The Contractor remains solely responsible for errors and omissions assocated with the preparation of Shop Drawings as they pertain to member sizes, details, dimensions, etc.
9. Submit Shop Drawings electronically. In no case shall reproductions of the Contract Documents be used as Shop Drawings. As a minimum, submit the following items for review.
   - A. Concrete Mix Design(s).
   - B. Reinforcing Steel Shop Drawings.
   - C. Structural Steel Shop Drawings.
   - D. Steel Joist Shop Drawings.
   - E. Steel Deck Shop Drawings.
   - F. Cold-Formed Steel Framing Systems.
10. Resubmitted Shop Drawings: Resubmitted shop drawings are reviewed only for responses to comments made in the previous submittal.
11. When calculations are included in the submittals for components of work designed and certified by a Specialty Structural Engineer, the review by the Structural Engineer of Record (SER) shall be for conformance with the relevant Contract Documents. The SER's review does not relieve the Specialty Structural Engineer from responsiblity for the design of the system(s) and the coordination with the elements of the structure under the certification of the Engineer of Record, or other Specialty Structural Engineer. The SER's review does not constitute a warranty of the accuracy or completeness of the Specialty Structural Engineer's design.
12. Contractors shall visit the site prior to bid to ascertain conditions which may adversely affect the work or cost thereof.
13. No structural member may be cut, notched, or otherwise reduced in strength without written direction from the SER.
14. When modifications are proposed to structural elements under the design and certification of a Specialty Engineer, written authorization by the Specialty Engineer must be obtained and submitted to the SER for review, prior to performing the proposed modifications.

COORDINATION WITH OTHER TRADES

1. The Contractor shall coordinate and check all dimensions relating to Architectural finishes, mechanical equipment and openings, elevator shafts and overrides, etc. and notify the Architect/Engineer of any discrepancies before proceeding with any work in the area under question.
2. The Structural Drawings shall be used in conjunction with the Drawings of all other disciplines and the Specifications. The Contractor shall verify the requirements of other trades as to sleeves, chases, hangers, inserts, anchors, holes, and other items to be placed or set in the Structural Work.
3. There shall be no vertical or horizontal sleeves set, or holes cut or drilled in any beam or column unless shown on the Structural Drawings or approved in writing by the SER.
4. Mechanical and electrical openings through supported slabs and walls, 8" diameter or larger not shown on the Structural Drawings must be approved by the SER. Openings less than 8" diameter shall have at least 1'-0" clear between openings, unless approved in writing by the SER.
5. Verify locations and dimensions of mechanical and electrical openings through supported slabs and walls shown on the Structural Drawings with the Mechanical and Electrical Contractors.
6. Do not install conduit in supported slabs, slabs on grade, or concrete walls unless explicitly shown or noted on the Structural Drawings.
7. Do not suspend any items, such as ductwork, mechanical or electrical fixtures, ceilings, etc. from steel roof deck or wood roof sheathing.
8. The Mechanical Contractor shall verify that mechanical units supported by steel framing are capable of spanning the distance between the supporting members indicated on the Structural Drawings. The Mechanical Contractor shall supply additional support framing as required.
9. If the Drawings and Specifications are in conflict, the most stringent restrictions and requirements shall govern.

FOUNDATIONS

1. Proofroll slab on grade areas with a medium-weight roller or other suitable equipment to check for pockets of soft material hidden beneath a thin crust of better soil. Any unsuitable materials thus exposed should be removed and replaced with compacted, engineered fill as outlined in the specifications. Proofrolling operations shall be monitored by the Geotechnical Testing Agency.
2. All engineered fill beneath slabs and over footings should be compacted to a dry density of at least 98% of the Standard Proctor maximum dry density (ASTM D698). All fill which shall be stressed by foundation loads shall be approved granular materials compacted to a dry density of at least 98% (ASTM D698). Coordinate all fill and compaction operations with the Specifications and the Geotechnical Engineering Investigation Report.
3. Compaction shall be accomplished by placing fill in approx. 8" lifts and mechanically compacting each lift to at least the specified minimum dry density. For large areas of fill, field density tests shall be performed for each 3,000 square feet of building area for each lift as necessary to insure adequate compaction is being achieved.
4. Column footings and wall footings to bear on firm natural soils or well-compacted engineered fill with an allowable bearing pressure of 3000 PSF for both column and wall footings, as outlined in the Geotechnical Engineering Investigation Report.
   It is essential that the foundations be inspected to ensure that all loose, soft or otherwise undesirable material (such as organics, existing fill, etc.) is removed and that the foundation will bear on satisfactory material. The Geotechnical Testing Agency shall inspect the subgade and perform any necessary tests to insure that the actual bearing capacities meet or exceed the design capacities. The Testing Agency shall verify the bearing capacity at each spread column footing and every 10 feet on center for strip footings prior to placement of concrete.
5. Place footings the same day the excavation is performed. If this is not possible, the footings shall be adequately protected against any detrimental change in condition, such as from disturbance, rain and freezing.
6. It is the responsibility of the Contractor and each Sub-Contractor to verify the location of all utilities and services shown, or not shown, and establish safe working conditions before commencing work.
7. The Contractor shall lay out the entire building and field verify all dimensions prior to excavation.
8. For information regarding subsurface conditions, refer to the Geotechnical Engineering Investigation Report prepared by ATC Group Services LLC, ATC Project No. 170GC00932, dated December 12, 2019.

POST-INSTALLED DOWELS & ANCHOR BOLTS/RODS

1. All reinforcing steel and threaded rod anchors to be installed in 2-part chemical anchoring system shall be treated as follows:
   - A. Drill holes larger than bar or rod to be embedded. Coordinate hole diameter with Manufacturer's requirements.
   - B. Holes must be cleaned and prepared in accordance with Manufacturer's requirements.
   - C. When reinforcing steel is encountered during drilling for installation of anchors, stop drilling and use a sensor to locate the reinforcing in the surrounding area and install anchor(s) as close as possible to the original location. Contact the Structural Engineer of Record for direction when the revised location is more than 2" from the original location, or when the original function of the anchorage is significantly altered. When in doubt, contact the SER for direction.
   - D. Drill the hole a minimum of 15 bar diameters or as shown on the Drawings.
   - E. Use a 2-part adhesive anchoring system, Hilti HIT-HY 200, or approved equal.
   - F. For anchorage into hollow substrate, use Hilti HIT-HY 270, or approved equal.
   - G. Reinforcing steel dowels shall be ASTM A615, Grade 60, unless noted.
   - H. Anchor rods shall be ISO 898 5.8 (Hilti HAS-E), unless noted. Provide finish as noted on the Drawings. If not noted, provide hot-dip galvanized finish for interior applications. Provide stainless steel finish for exterior applications, unless noted.
2. When column anchor bolts/rods have been omitted, or damaged by construction operations, the Contractor must obtain the written approval of the SER prior to repair and/or replacement.
   - A. As a precaution, the affected column must be guyed and braced after repair for the balance of the erection period.
   - B. As an alternate to guying and bracing, the Contractor may at his option, employ a testing agency to perform a tensile pull test to confirm the strength of the repaired or replaced anchor bolt/rod. The tensile proof load must exceed 1.33 x the design load of the original anchor without causing distress of the anchor bolt/rod or the surrounding concrete. Reference the following table for the minimum proof loads:
     - 3/4" diameter: 11.6 kips
     - 7/8" diameter: 16.0 kips
     - 1" diameter: 20.9 kips

     Note: Values listed above are for ASTM F1554, Grade 36 material. When higher grade or strength materials are specified, refer to the AISC Manual of Steel Construction for minimum allowable loads to be multiplied by 1.33.
   - C. When affected anchor bolts/rods are part of a fixed moment-resisting column base, such as those in moment-resisting space frames, canopies, or fixed-base installations, the repaired anchor bolts/rods must be proof-loaded, or the affected column footing and/or pier replaced in its entirety.
   - D. When affected anchor bolts/rods are 1-1/8" diameter or larger, the affected column footing and/or pier must be replaced in its entirety.
   - E. When affected anchor bolts/rods are part of a braced frame, the affected column footing and/or pier must be replaced in its entirety.
   - F. Prior to erection, the controlling Contractor must provide written notification to the Steel Erector if there has been a repair, replacement or modification of the anchor bolts/rods for that column.

DESIGN CRITERIA

1. DESIGN STANDARDS: The intended design standards and/or criteria are as follows:

General	The 2014 Indiana Building Code (2012 International Building Code [IBC] with Indiana Amendments)
Concrete	ACI318
Masonry	ACI 530 / TMS 402
Steel	AISC Manual, Allowable Stress Design (ASD)
Steel Joists/Girders	Steel Joist Institute
Steel Deck	Steel Deck Institute
Cold-Formed Metal	AISI-ASD

   All referenced standards and codes, as well as ASTM numbers are for the latest editions of these publications, unless otherwise noted.
2. DEAD LOADS: Gravity Dead Loads used in the design of the structure are as computed for the materials of construction incorporated into the building, including but not limited to walls, floors, ceilings, stairways, fixed partitions, finishes, cladding and other similar architectural and structural items, as well as mechanical, electrical and plumbing equipment and fixtures, and material handling and fixed service equipment, including the weight of cranes.
3. LIVE LOADS: Gravity Live Loads used in the design of the structure meet or exceed the following table (IBC 2012, 1607.1):

OCCUPANCY OR USE:	Uniform (PSF):	Concentrated (LBS): [Note #1]
A. Offices	50	2000
B. Classrooms	40	1000
C. Corridors above First Floor	80	2000
D. Lobbies & First-floor Corridors	100	2000
E. Laboratories	60	1000
F. Stairs & Exits	100	300 on A = 4 in²

   Note #1: Unless otherwise noted, the indicated concentrated load has been assumed to be uniformly distributed over an area of 30" x 30".
4. LIVE LOAD REDUCTION: Live load reductions in accordance with IBC 1607.9 have been used with the following exceptions:
   - A. Heavy live loads in excess of 100 PSF have not been reduced except for members supporting 2 or more floors have been reduced by a max. of 20%.
   - B. Live loads for roof members have not been reduced.
5. IMPACT DESIGN: The live loads listed in the table above include allowance for impact. Impact has been considered in the design of the following elements:
   - A. Members supporting elevator loads have been increased by 100% for impact.
6. PARTITION ALLOWANCE: A uniform partition allowance of 20 PSF has been used to account for the load of all floors where partition locations are subject to change, unless the specified live load exceeds 80 PSF.
7. COLLATERAL LOAD: Unless otherwise noted, a minimum uniform collateral load of 10 PSF has been used to account for ductwork, ceilings, sprinklers, lighting, etc. The collateral load is in addition to the weight of mechanical units, larger piping (greater than 4" diameter) and suspended fixtures or equipment that have been specifically accounted for in the design.
8. ROOF LIVE / SNOW LOADS: Gravity Live Loads used in the design of the roof structure meet or exceed the following table:
   - A. Snow Load
     - Ground Snow Load, p_g: 20 PSF
     - Flat Roof Snow Load, p_f: 15.4 PSF
     - Low-Slope Minimum Roof Snow Load, p_m: 22 PSF
     - Snow Exposure Factor, C_e: 1.0
     - Risk Category (IBC 2012, Table 1604.5): III
     - Snow Importance Factor, I_s: 1.1
     - Thermal Factor, C_t: 1.0
   - B. Minimum Roof Live Load: 20 PSF
   - C. Overhanging Eaves, Canopies & Projections: 30 PSF
     1. Drift loads calculated in accordance with Section 7.7, ASCE 7. Specialty Engineers must consider snow drift loads in the design of pre-engineered trusses, frames, skylights, curtain walls, cold-formed metal framing, canopies, etc.
9. HANDRAILS AND GUARDS:
   - A. Handrail Assemblies and Guards: 50 PLF applied in any direction; 200 LB concentrated load applied in any direction (non-concurrent with 50 PLF load).
   - B. Components, Intermediate Rails, Balusters, Fillers, Etc.: 50 LBS horizontally applied normal load on an area not to exceed 1 SF, not superimposed with those of handrail assemblies.
10. LATERAL LOADS: Lateral loads were computed using the following criteria:
    - A. Wind Load
      - Ultimate Design Wind Speed, V_{ult}: 120 MPH
      - Nominal Design Wind Speed, V_{asd}: 93 MPH
      - Wind Exposure Category: C
      - Risk Category (IBC 2012, Table 1604.5): III
      - Internal Pressure Coefficient, GC_{pi}: +/- 0.18
    - B. Seismic Load
      - Site Class: C
      - Risk Category (IBC 2012, Table 1604.5): III
      - Seismic Importance Factor, I_e: 1.25
      - Mapped Spectral Response Acceleration Parameter, S_S: 0.175g
      - Mapped Spectral Response Acceleration Parameter, S_1: 0.091g
      - Design Spectral Response Acceleration Parameter, S_{DS}: 0.140g
      - Design Spectral Response Acceleration Parameter, S_{D1}: 0.103g
      - Seismic Design Category, SDC: B
      - Analysis Procedure: Equivalent Lateral Force
      - Seismic Force-Resisting System: Steel Systems not Specifically Detailed for Seismic Resistance
      - Response Modification Coefficient, R: 3
      - Seismic Response Coefficient, C_s: 0.0583
      - Design Base Shear, V: 0.0583W
11. SAFETY FACTORS: This structure has been designed with 'Safety Factors' in accordance with accepted principles of structural engineering. The fundamental nature of the 'Safety Factor' is to compensate for uncertainties in the design, fabrication, and erection of structural building components. It is intended that 'Safety Factors' be used such that the load-carrying capacity of the structure does not fall below the design load and that the building will perform under design load without distress. While the use of 'Safety Factors' implies some excess capacity beyond design load, such excess capacity cannot be adequately predicted and SHALL NOT BE RELIED UPON.

REINFORCED MASONRY NOTES

1. All construction of reinforced masonry walls to be in accordance with the Building Code Requirements For Concrete Masonry Structures (ACI 530 / TMS 402) and Commentary.
   - A. f'_m = 2000 PSI
   - B. Maximum height of masonry lift: 5'-0"
   - C. Maximum height of grout lift: 5'-0"
   - D. See the Specifications for additional masonry wall information.
2. CONCRETE BLOCK: Minimum compressive test strength on the net cross-sectional area: 2800 PSI.
3. MORTAR: Type S required.
4. GROUT: ASTM C476, 2500 PSI with a slump of 8" min. and 10" max.
5. REINFORCING: f_y = 60,000 PSI with a min. lap of 48 bar diameters.
6. WEIGHT CLASSIFICATION: Use Normal Weight CMU below grade. Use Medium or Normal Weight CMU above grade, unless otherwise noted or approved.

LINTEL SCHEDULE

1. Where lintels are not specifically shown or noted on the Structural or Architectural Drawings, provide the following lintels over all openings and recesses in both interior and exterior non-load-bearing walls.
   - A) Brick:

Masonry Opening	Angle Size
Up to 5'-0"	L4x4x5/16
5'-1" to 7'-0"	L6x4x5/16
7'-1" to 12'-4"	L7x4x3/8

     All angles are LLV (long leg vertical) unless noted otherwise. Provide 1" bearing length per foot of span each end with minimum 8".
   - B) Block: For openings up to 8'-0" long exposed in the finished room, use lintel block filled with grout. Grout all exposed joints and reinforce as follows:
     1. For 6" thick block: 1 - #5 bar.
     2. For 8" thick block: 2 - #5 bars.
     3. For 10" thick block: 2 - #6 bars.
     4. For 12" thick block: 2 - #6 bars.
   - C) Block: For openings between 8'-1" & 12'-0" long exposed in the finished room, use lintel block filled with grout. Grout all exposed joints and reinforce per the "Long Masonry Lintel Detail" on the Typical Detail Drawings.
   - D) Shore all block and steel angle lintels over 8'-0" in length until masonry has attained its specified design strength.

CAST IN PLACE CONCRETE

1. Details of fabrication of reinforcement, handling and placing of the concrete, construction of forms and placement of reinforcement not otherwise covered by the Plans and Specifications, shall comply with the ACI Code requirements of the latest revised date.
2. Cold weather concreting shall be in accordance with ACI 306. Cold weather is defined as a period when for more than 3 successive days the average daily air temperature drops below 40F and stays below 50F. The Contractor shall maintain a copy of this publication on site.
3. Hot weather concreting shall be in accordance with ACI 305. Hot weather is defined as any combination of the following conditions that tends to impair the quality of the freshly mixed or hardened concrete: high ambient temperature, high concrete temperature, low relative humidity, wind speed, or solar radiation. The Contractor shall maintain a copy of this publication on site.
4. A certified Testing Agency shall be retained to perform industry standard testing including measurement of slump, air temperature, concrete cylinder testing, etc. to ensure conformance with the Contract Documents. Submit reports to the Architect/Engineer.
5. FINISHING OF SLABS: After screeding, bull floating and floating operations have been completed, apply final finish as indicated below, and as described in the Division 3 Cast In Place Concrete Specification of the Project Manual.
   - A. Floor Slabs — Trowel Finish, unless noted otherwise
   - B. Ramps, Stairs & Sidewalks — Broom Finish
   - C. Surfaces to Recieve Topping Slabs — None - Float Finish
   - D. Surfaces to recieve thick-set mortar beds or similar cementitious materials — None - Float Finish

   Sample Finishes: See the Specifications for sample and mockup requirements, if any. Coordinate floor finishes with the architectural Finish Plan.

   Floor Tolerances: See the Specifications for specified Ff and Fl tolerances. Ff and Fl testing shall be performed by the Testing Agency in accordance with ASTM E1155. Results, including acceptance or rejection of the work will be provided to the Contractor and the Architect/Engineer within 48 hours after data collection. Remedies for out-of-tolerance work shall be in accordance with the Specifications.
6. FINISHING OF FORMED SURFACES: Finish formed surfaces as indicated below, and as described in the Division 3 Cast In Place Concrete Specification of the Project Manual.
   - A. Sides of Footings — Rough Form Finish
   - B. Sides of Grade Beams — Rough Form Finish
   - C. Surfaces not exposed to public view — Rough Form Finish
   - D. Surfaces exposed to public view — Smooth Form Finish
7. The Contractor shall consult with the Engineer before starting concrete work to establish a satisfactory placing schedule and to determine the location of construction joints so as to minimize the effects of shrinkage in the floor system.
8. Sawn or tooled control/contraction joints shall be provided in all slabs on grade. For a framed structure, joints shall be located on all column lines. Provide intermediate joints spaced at a maximum of 36 times the nominal slab thickness. Exterior slabs, and interior slabs without columns, shall also have a maximum joint spacing of 36 times the nominal slab thickness. Lay out joints so that maximum aspect ratio (ratio of long side to short side) does not exceed 1.5.
9. Where vinyl composition tile, vinyl sheet goods, thin-set epoxy terrazzo, or other similar material is the specified finish floor material, the Contractor shall coordinate the locations of control/contraction and construction joints with the Finish Flooring Contractor. Submit a dimensioned plan showing joint locations and proposed sequence of floor pours.
10. Unless specifically noted on the Plans, do not provide sawn control joints in composite and non-composite supported slabs on metal deck or in supported cast-in-place concrete slabs.
11. Joints in slabs to receive a finish floor may remain unfilled, unless required by the Finish Flooring Contractor. All exposed slabs shall be filled with sealant specified in Division 7, or as follows: All slabs in industrial, manufacturing, or warehouse applications subject to wheeled traffic shall be filled with specified epoxy resin sealant, all other joints shall be filled with specified elastometric sealant. Defer filling of joints as long as possible, preferably a minimum of 4 to 6 weeks after the slab has been cured. Prior to filling, remove all debris from the slab joints, the fill in accordance with the manufacturer's recommendations.
12. Refer to the Architectural Drawings for locations and details of reveals (1" maximum depth) in exposed walls.
13. Refer to the Architectural Drawings for chamfer requirements for corners of concrete. Where not indicated, provide 3/4" chamfers on exposed corners of concrete, except those abutting masonry.
14. Refer to the Architectural Drawings for exact locations and dimensions of recessed slabs, ramps, stairs, thickened slabs, etc. Slope slabs to drains where shown on the Architectural and Plumbing Drawings.
15. Sidewalks, stoops, aprons, drives, exterior retaining walls, and other site concrete are not indicated on the Structural Drawings. Refer to the Site/Civil and Architectural Drawings for locations, dimensions, elevations, jointing, and finishing details.

CONCRETE MIX CLASSES

FOOTINGS	
COMPRESSIVE STRENGTH	4000 PSI
MAXIMUM WATER/CEMENT RATIO	0.58
AIR CONTENT	0 - 3 PERCENT
WATER-REDUCING ADMIXTURE	OPTIONAL
SLUMP	4" +/- 1"
FOUNDATION WALLS, RETAINING WALLS, PIERS, GRADE BEAMS & TIE BEAMS	
COMPRESSIVE STRENGTH	4000 PSI
MAXIMUM WATER/CEMENT RATIO	0.50
AIR CONTENT	0 - 3 PERCENT
WATER-REDUCING ADMIXTURE	REQUIRED
SLUMP	4" +/- 1"
INTERIOR CONCRETE SLABS ON GRADE & SUSPENDED SLABS	
COMPRESSIVE STRENGTH	4000 PSI
MINIMUM CEMENTITIOUS MATERIAL CONTENT	517 LB/CU YD
AIR CONTENT	0 - 3 PERCENT
WATER-REDUCING ADMIXTURE	REQUIRED
SLUMP	4" +/- 1"
	1
EXTERIOR CONCRETE SUBJECT TO FREEZE-THAW	
COMPRESSIVE STRENGTH	4000 PSI
MINIMUM CEMENTITIOUS MATERIAL CONTENT	564 LB/CU YD
AIR CONTENT	6 +/- 1 PERCENT
WATER-REDUCING ADMIXTURE	REQUIRED
SLUMP	5" +/- 1"
COARSE AGGREGATE	CRUSHED STONE
LEAN CONCRETE FILL	
COMPRESSIVE STRENGTH	2000 PSI
MAXIMUM WATER/CEMENT RATIO	0.65
AIR CONTENT	OPTIONAL
WATER-REDUCING ADMIXTURE	OPTIONAL
SLUMP	4" +/- 1"
STAIR PAN FILL	
COMPRESSIVE STRENGTH	4000 PSI
MINIMUM CEMENTITIOUS MATERIAL CONTENT	564 LB/CU YD
AIR CONTENT	0 - 3 PERCENT
WATER-REDUCING ADMIXTURE	REQUIRED
SLUMP	4" +/- 1"
CLASS 'C' FLYASH	MIN. 10% / MAX 20%

1. SLUMP:
   - MIXES CONTAINING TYPE A WRDA: 5" MAXIMUM
   - MIXES CONTAINING MID-RANGE WRDA: 5 - 6½"
   - MIXES CONTAINING HIGH-RANGE WRDA: 5 - 8"
2. SPECIFIED MINIMUM CEMENTITIOUS MATERIAL CONTENTS ARE BASED ON THE USE OF WATER REDUCING ADMIXTURES.
3. INCLUDE AN AIR-ENTRAINING ADMIXTURE FOR ALL CONCRETE EXPOSED TO FREEZING AND THAWING IN SERVICE AND FOR ALL CONCRETE EXPOSED TO COLD WEATHER DURING CONSTRUCTION, BEFORE ATTAINING ITS SPECIFIED DESIGN COMPRESSIVE STRENGTH. REF. ACI 306 FOR DEFINITION OF COLD WEATHER.
4. CLASS C FLY ASH MAY BE USED AS A CEMENT SUBSTITUTE WITH A MAXIMUM 20% SUBSTITUTION RATE ON A POUND-PER-POUND BASIS.
5. PROPORTION CONCRETE MIXES TO PROVIDE WORKABILITY AND CONSISTENCY TO PERMIT CONCRETE TO BE WORKED READILY INTO THE CORNERS AND ANGLES OF THE FORMS AND AROUND REINFORCEMENT BY THE METHODS OF PLACEMENT AND CONSOLIDATION TO BE EMPLOYED, WITHOUT SEGREGATION AND EXCESSIVE BLEEDING.
6. ADJUSTMENTS TO THE APPROVED MIX DESIGNS MAY BE REQUESTED BY THE CONTRACTOR WHEN JOB CONDITIONS, WEATHER, TEST RESULTS, OR OTHER CIRCUMSTANCES WARRANT. THESE REVISED MIX DESIGNS SHALL BE SUBMITTED TO THE ARCHITECT/ENGINEER FOR APPROVAL PRIOR TO USE.

STEEL STAIRS

1. Refer to the Design Criteria notes for live load and handrail requirements.
2. All stair designs shall be provided by the Stair Manufacturer/Fabricator's SSE and shall be stamped by a Professional Engineer registered in the State of Indiana. Stair designs shall be in accordance with all applicable code provisions of the IBC.
3. The Stair Manufacturer/Fabricator's SSE shall provide the SER with drawings showing location, direction and magnitudes of all stair load reactions on the building structure for approval, prior to fabrication.
4. The Stair Manufacturer/Fabricator shall coordinate the transition between the supported structural floor slab and the stair structure with the Structural Steel Fabricator, prior to fabrication.
5. Refer to the Architectural Drawings for stair width, rise, run, tread and riser geometry, handrail and guardrail design, shaft wall construction, etc.

CONCRETE REINFORCING

1. Reinforcement, other than cold drawn wire for spirals and welded wire fabric, shall have deformed surfaces in accordance with ASTM A305.
2. Reinforcing steel shall conform to ASTM A615, Grade 60, unless noted.
3. Welded wire fabric shall conform to ASTM A1064, unless noted.
4. Where hooks are indicated, provide standard hooks per ACI and CRSI for all bars unless other hook dimensions are shown on the plans or details.
5. Reinforcement in footings, walls and beams shall be continuous. Lap bars a minimum of 36 diameters, unless noted otherwise.
6. Reinforcement shall be supported and secured against displacement in accordance with the Concrete Reinforcing Steel Institute's "Manual of Standard Practice."
7. Details of reinforcing steel fabrication and placement shall conform to ACI 315 'Details and Detailing of Concrete Reinforcement' and ACI 315R 'Manual of Engineering and Placing Drawings for Reinforced Concrete Structures', unless otherwise indicated.
8. Spread reinforcing steel around small openings and sleeves in slabs and walls, where possible, and where bar spacing will not exceed 1.5 times the normal spacing. Discontinue bars at all large openings where necessary, and provide an area or reinforcement, equal to the interrupted reinforcement, in full length bars, distributing one-half each side of the opening. Where shrinkage and temperature reinforcement is interrupted, add (2) #5 x *opening dimension +4'-0"* on each side of the opening. Provide #5 x 4'-0" diagonal bars in both faces, at each corner of openings larger than 12" in any direction.
9. Provide standees for the support of top reinforcement for footings, pile caps, and mat foundations.
10. Provide individual high chairs, with support bars, as required for the support of top reinforcement for supported slabs. Do NOT provide standees.
11. Provide snap-on plastic space wheels to maintain required concrete cover for vertical wall reinforcement.
12. Where walls sit on column footings, provide dowels for the wall. Dowels shall be the same size and spacing as the vertical wall reinforcement, unless noted otherwise, with lab splices as shown on the application sections. Install dowels in the footing forms before concrete is placed. Do NOT stick dowels into footings after concrete is placed.
13. Field bending of reinforcing steel is prohibited, unless noted on the drawings.
14. Minimum concrete cover over reinforcing steel shall be as follows, unless noted otherwise on plan, section or note:

MINIMUM COVER FOR REINFORCEMENT

	MINIMUM COVER
SLABS AND JOISTS	
TOP & BOTTOM BARS FOR DRY CONDITIONS:	
#11 BARS & SMALLER	3/4"
#14 & #18 BARS	1 1/2"
FORMED CONCRETE SURFACES EXPOSED TO EARTH, WATER, OR WEATHER, AND OVER OR IN CONTACT WITH SEWAGE AND FOR BOTTOMS BEARING ON WORK MAT, OR SLABS SUPPORTING EARTH COVER:	
#5 BARS & SMALLER	1 1/2"
#6 THROUGH #18 BARS	2"
BEAMS & COLUMNS, FORMED	
FOR DRY CONDITIONS:	
STIRRUPS, SPIRALS & TIES	1 1/2"
PRINCIPAL REINFORCEMENT	2"
EXPOSED TO EARTH, WATER, SEWAGE, OR WEATHER:	
STIRRUPS & TIES	2"
PRINCIPAL REINFORCEMENT	2 1/2"
WALLS	
FOR DRY CONDITIONS:	
#11 BARS & SMALLER	3/4"
#14 & #18 BARS	1 1/2"
FORMED CONCRETE SURFACES EXPOSED TO EARTH, WATER, SEWAGE, WEATHER, OR IN CONTACT WITH GROUND	2"
FOOTINGS & BASE SLABS	
AT FORMED SURFACES & BOTTOMS BEARING ON CONCRETE WORK MAT	2"
AT UNFORMED SURFACES & BOTTOMS IN CONTACT WITH EARTH	3"
TOP OF FOOTINGS	SAME AS SLABS
OVER TOP OF PILES	2"

STRUCTURAL STEEL NOTES

1. Structural steel construction shall conform to the American Institute of Steel Construction "Specification for Structural Steel Bulidings".
2. All structural wide flange members shall be ASTM A992, Fy = 50 ksi.
3. All plates, channels, bars, angles, and rods shall be ASTM A36, unless noted.
4. All rectangular and square structural tube members shall be ASTM A500, Grade B, Fy = 46 ksi unless noted.
5. All round structural tube members shall be ASTM A500, Grade B, Fy = 42 ksi unless noted.
6. Details for design, fabrication and erection of all structural steel shall be in accordance with the latest AISC Standards, unless otherwise noted or specified.
7. Provide temporary erection guying and bracing as required.
8. Unless otherwise shown or noted on the Drawings, provide 8" minimum bearing each end for all loose lintels and beams.
9. For loose lintels, masonry shelf angles and other such items generally not shown on the Structural Drawings, refer to the Architectural Drawings. See general notes on lintels this sheet for sizes, reinforcing, etc.
10. Steel columns below grade shall be encased in a minimum of 4" concrete or painted with 2 coats of asphaltum paint, unless otherwise shown.
11. Fabricate simple span beams not specifically noted to receive camber so that after erection, any minor camber due to rolling or shop assembly be upward.
12. Refer to the Division 5 Structural Steel Specification of the Project Manual for structural steel surface preparations and prime painting requirements.
13. The Erector shall shim between parallel roof beams and joists with differential mill and induced cambers for level deck bearing.
14. Provide cap plates/end plates to close off exposed, open ends of all tubular members, unless noted. Seal weld with partial penetration square groove welds for watertight condition.

STEEL JOIST NOTES

1. All steel joists shall be designed, fabricated and erected in accordance with the SJI Standard Specifications.
2. Joist bridging (if shown) is schematically indicated. Provide all bridging necessary to conform to SJI Specifications.
3. The ends of all bridging lines terminating at walls or beams shall be anchored to the wall or beam.
4. Joist bridging and connections shall be completely installed prior to placing any construction loads on the joists. Construction loading shall not exceed the joist design load.
5. All roof joists shall be capable of resisting the net uplift as noted on the Structural Drawings (min. 15 psf net). Provide an additional row of continuous horizontal bottom chord bridging at the first panel point location at each end of all roof joists.
6. Special joists (SP) shall be designed for the load designations specified on the Structural Drawings. Designs shall properly account for the distribution of concentrated loads, live loads and for the effect of openings. Designs are to meet the requirements of SJI.
7. Joists shall meet the following deflection criteria per SJI. Maximum live load deflection shall not exceed:
   - A) Roofs: L/360
   - B) Floors: L/360
8. The Joist Manufacturer shall submit calculations for all special joists to the SER for record purposes, prior to fabrication. These calculations shall bear the seal and signature of a Professional Engineer registered in the State of Indiana.
9. Joists on column centerlines shall have extended bottom chord connections for erection stability, unless otherwise noted. Do not connect bottom chord extensions, unless otherwise noted or shown.
10. Joists on or near column centerlines shall have field-bolted connections for erection stability, unless otherwise noted.
11. The Joist Manufacturer shall coordinate with the Structural Steel Fabricator for the design of all connections to supporting columns, beams, bearing seats, etc. prior to submittal of shop drawings.
12. All steel joists shall be furnished with standard SJI camber, unless noted otherwise.
13. All items suspended from joists such as catwalks, basketball goals, operable partitions, etc. should be installed after all dead loads of roofing, flooring, ceilings, etc. are installed.
14. All joists shall be shop primed in accordance with SJI requirements, unless noted otherwise. Color to match structural steel primer, unless approved in writing by the SER.
15. Provide sloped bearing ends where joist slope exceeds 1/4" per foot.
16. Do not field cut or alter joists without the written approval of the Joist Manufacturer.

STEEL CONNECTION NOTES

1. Typical beam-to-beam and beam-to-column connections shall be bearing type using A325 bolts, unless noted otherwise.
2. Shop connections, unless otherwise shown, may be either bolted or welded. All field connections shall be bolted unless otherwise shown on the Structural Drawings.
3. Connections shall be designed by the Steel Fabricator to support the reactions shown on the framing plan(s). Simple span connections without reactions listed on the Structural Drawings shall be designed by the Steel Fabricator's SSE in accordance with Table 3-6 of the AISC "Manual of Steel Construction, 14th Edition". For composite beams where reactions are not indicated, design connections for 75% of the Maximum Total Uniform Load ASD value for the applicable beam size and span given in Table 3-6. For non-composite beams, design connections for 50% of the tabulated ASD value. The minimum shear connection design load shall be 15 kips.
4. Submit calculations for connections not detailed on the Structural Drawings and not covered by the AISC Tables, including but not limited to:
   - A. Bracing Connections including Collectors and Drag Struts.
   - B. Skewed Shear Connections.
5. All beam-to-beam connections shall be double angle, unless shown or noted otherwise.
6. All beam-to-column connections shall be at the column centerline, unless shown or noted otherwise. Shear tab connections to tube columns are permitted unless otherwise noted or detailed.
7. Typical bearing-type beam-to-beam, and beam-to-column field-bolted connections may be tightened to the snug-tight condition, unless otherwise shown or noted.
8. Bolted connections in moment frames, bracing connections, hangers and stub columns, crane connections, and those designated PT (pretensioned) on the Drawings shall be pretensioned joints utilizing tension-control (TC) bolts or direct tension indicators. Holes for bolts in pretensioned joints shall be 1/16" larger than the bolt diameter. All pretensioned joints must be inspected by the Testing Agency.
9. Connect bracing members for two components of stress unless otherwise approved by the SER. Provide a minimum 2-bolt or welded field connection.
10. Locate centerlines of all vertical bracing members on column centerlines in vertical plane and on column and beam centerlines in horizontal plane, unless otherwise shown on the Structural Drawings.
11. All welding shall be in conformance with AWS D1.1, using E70XX electrodes, unless shown or noted otherwise. Welding, both shop and field, shall be performed by welders certified for the weld types and positions involved according to the current edition of AWS D1.1. Perform all AESS welds with care to provide a clean, uniform appearance.
12. Backup bars required for welded connections shall be continuous.
13. Holes in steel shall be drilled or punched. All slotted holes shall be provided with smooth edges. Burning of holes in structural steel shall not be allowed without approval of the SER.
14. The minimum thickness of all connection material shall be 5/16", unless noted.
15. Continuous bent plate and angle slab closures, roof edges, diaphragm chords, etc. around perimeter of the floor and roof, as well as around openings shall be welded with a minimum 1/4" fillet weld x 3" long at 12" OC, top & bottom, unless noted otherwise. Butt weld joints in continuous diaphragm chords for continuity. For continuous perimeter angles and bent plates perpendicular to and connected to the top chords of joists, provide a minimum 3" of 1/4" weld at each joist. Continuous angle and bent plate closures may be shop-applied to the supporting structural members only when requested and approved in writing by the SER.
16. A qualified independent Testing Agency shall be retained to perform inspection and testing of structural steel field weldments as follows:

WELD INSPECTION SCHEDULE

WELD TYPE	VT	MT	UT	PT	RT	COMMENTS
FILLET (SINGLE PASS)	25%	--	--	--	--	ROOT PASS AND FINISHED WELD
FILLET (MULTIPLE PASS)	50%	25%	--	--	--	
FLARE BEVEL/ FLARE V	25%	--	--	--	--	
GROOVE (PARTIAL PENETRATION)	100%	--	100%	--	--	REFERENCE NOTE 'E' BELOW
GROOVE (FULL PENETRATION)	100%	--	100%	--	--	<u>ALL</u> FULL PENETRATION WELDS

- A) Test procedures:
  - VT = Visual Test (inspection)
  - MT = Magnetic Particle Test: ASTM E109, cracks or incomplete fusion or penetration not acceptable.
  - UT = Ultrasonic Test: ASTM E164.
  - PT = Penetrant Test: ASTM E165.
  - RT = Radiographic Test: ASTM E94 and ASTM E142, min. quality level 2-21.
- B) Acceptance standards in AWS D1.1 shall be followed for each test procedure.
- C) Test procedures may be substituted to meet feasibility requirements of test based upon weld geometry or other factors with the approval of the SER.
- D) Samples shall occur at random locations; additional tests may be required at locations noted on the Drawings.
- E) Groove welds include square, bevel, V, U, and J grooves including single and double pass types.
- F) Partial penetration square groove welds at end seal plates of tubular members do not require inspection.
- G) Weld Procedure Specifications (WPS) shall be produced and maintained in accordance with AWS D1.1. The independent Testing Agency shall have access to all WPS's during the course of testing and inspection.
- H) For highly-restrained welded joints, especially in thick plates and/or heavy structural shapes, detail the welds so that shrinkage occurs as much as possible in the direction the steel was rolled. Refer to the AISC Manual for preferred welded-joint arrangements that reduce the possibility for lamellar tearing. Members scheduled to receive highly-restrained connections shall be tested by the independent Testing Agency by Ultrasonic Testing prior to commencing welding.
- I) In addition to inspection requirements for fillet welds in Table above, 100% of field welding of diagonal bracing members to gusset plates shall be visually inspected (VT).

SPECIALTY STRUCTURAL ENGINEERING (SSE)

1. A Specialty Structurally Engineer (SSE) is defined as a Professional Engineer licensed in the State of Indiana, not the Structural Engineer of Record (SER), who performs Structural Engineering functions necessary for the structure to be completed and who has shown experience and/or training in the specific speciality.
2. It is the SSE's responsibility to review the Construction Drawings and Specifications to determine the appropriate scope of engineering.
3. It is the intent of the Drawings and Specifications to provide sufficient information for the SSE to perform his design and analysis. If the SSE determines there are details, features, or unanticipated project limits which conflict with the engineering requirements as described in the project documents, the SSE shall in a timely manner contact the SER for resolution of conflicts.
4. The SSE shall forward documents to the SER for review. Such documents shall bear the stamp of the SSE and include:
   - A. Drawings introducing engineering input, such as defining the configuration or structural capacity of structural components and/or their assembly into structural systems.
   - B. Calculations.
   - C. Computer printouts which are an acceptable substitute for manual calculations provided they are accompanied by sufficient design assumptions and identified input and output information to permit their proper evaluation. Such information shall bear the stamp of the SSE as an indication that said SSE has accepted responsibility for the results.
5. Contractors are referred to the specific technical specification sections and the structural drawings for those elements requiring Specialty Structural Engineering. Examples of components requiring Specialty Structural Engineering include, but are not limited to the following:
   - A. Structural Steel Connections.
   - B. Steel Joist Systems.
   - C. Steel Stairs.
   - D. Handrails & Guards.
   - E. Cold-Formed Steel Framing.
   - F. Curtain Wall Systems.
6. When modifications are proposed to elements under the design and certification of the SSE, written authorization by the SSE must be obtained and submitted to the SER for review prior to performing the proposed modification.

STEEL DECK NOTES

1. All steel deck material, fabrication and installation shall conform to the Steel Deck Institute "SDI SPECIFICATIONS AND COMMENTARY" and "CODE OF RECOMMENDED STANDARD PRACTICE," current edition, unless noted otherwise.
2. Provide members for deck support at all deck span changes. Provide L3x3x3/16 deck support at all columns where required.
3. All deck shall be provided in a minimum of 3-span lengths where possible.
4. All welding of steel deck shall be in conformance with AWS Specification D1.3. Provide welding washers for all floor decks less than 22 gauge in thickness.
5. Mechanical fasteners may be used in lieu of welding, providing fasteners meet or exceed the strength of specified welds. Submit fastener design data to the SER for review.
6. Substitution of fiber secondary reinforcement for welded wire fabric on supported slabs is prohibited.
7. Do not suspend any items, such as ductwork, mechanical and electrical fixtures, ceilings, etc. from steel deck.
8. Roof deck sidelaps shall be attached at ends of cantilevers and at a maximum spacing of 12" o.c. from cantilevered deck ends. The roof deck must be completely fastened to the supports and at sidelaps before any load is applied to the cantilever.
9. Submit shop drawings for review of general conformance to the design concept in accordance with the Specifications in the Project Manual. Erection drawings shall show type of deck, shop finish, accessories, method of attachment, edge details, deck openings and reinforcement, and sequence of installation.
10. Installation holes shall be sealed with a closure plate 2 gauges thicker than deck and mechanically fastened to the deck. Steel deck holes visible from below will be rejected. Deck units that are bent, warped, or damaged in any way which would impair the strength and appearance of the deck shall be removed from the site.
11. Where gauge metal pourstops are indicated, supply pourstops designed to meet or exceed the gauges listed in the SDI Pourstop Selection Table (min. 18 ga.) as required for slab depth, concrete weight, and cantilever distance, unless noted otherwise.
12. The Erector shall shim between parallel roof beams and joists with differential mill and induced cambers for level deck bearing.

COLD-FORMED (LIGHT GAUGE) METAL FRAMING NOTES

1. All cold-formed steel framing members, their design, fabrication, and erection shall conform to the "SPECIFICATION FOR THE DESIGN OF COLD-FORMED STEEL STRUCTURAL MEMBERS" of the latest edition of the AISI.
2. All framing members shall be formed from steel conforming to ASTM A653, with a minimum yield strength as follows:
   - A. 12, 14 & 16 gauge members: Fy = 50ksi
   - B. 18, 20 gauge members: Fy = 36ksi
3. All framing members shall be galvanized with a G60 coating meeting the requirements of ASTM A653, unless otherwise indicated.
4. Members shall be the Manufacturer's standard 'C'-Shaped studs/joists of the size, flange width, and gauge indicated. All members shall have a minimum flange lip return of 1/2" and satisfy the minimum properties in accordance with the Steel Stud Manufacturers Association (SSMA).
5. The gauge of all tracks shall match the gauge of the associated stud or joist, unless otherwise noted.
6. All welding shall be in accordance with AWS Specification D1.3. No welding of members less than 14 gauge in thickness is permitted without the approval of the SER. All welding shall be performed by certified welders. All welds shall be touched up with zinc rich paint in accordance with ASTM A780.
7. Provide bridging for all load-bearing studs at a maximum spacing of 48" o.c.
8. Provide bridging for all non-load-bearing curtain wall studs at a maximum spacing of 54" o.c. Locate one row of bridging within 18" of the top track when a single deep-leg deflection track is utilized.
9. Provide bridging for joists and rafters at midspan and at a maximum spacing of 6'-0" o.c., unless noted otherwise. All bridging shall be installed prior to the application of any loading. Connect bridging to each member by clip angles, or other approved method per the Manufacturer's requirements.
10. Provide web stiffeners at joist and rafter bearings in accordance with the Manufacturer's requirements.
11. All axially loaded studs shall have full bearing against the track web, prior to stud and track alignment. Splices in axially loaded studs are not permitted.
12. Provide the Manufacturer's standard track, clip angles, bracing, reinforcement, fasteners, and accessories as recommended by the Manufacturer for the application indicated and as needed to provide a complete framing system. Unless otherwise indicated, install the metal framing system in accordance with the Manufacturer's shop drawings, written instructions and recommendations.
13. Install supplementary framing, blocking, and bracing in metal framing system wherever walls or partitions are indicated to support fixtures, equipment, services, casework, heavy trim and furnishings, and similar work requiring attachment to the wall or partition. Where type of supplementary support is not otherwise indicated, comply with the stud manufacturer's recommendations and industry standards in each case, considering weight or loading resulting from the item supported.
14. All field-cutting of studs must be done by sawing or shearing. Torch cutting of cold-formed members is not allowed.
15. No notching or coping of studs is allowed, unless explicitly shown on the design or shop drawings. All field-cut holes must be reinforced.
16. The Framing Contractor is to ensure punch out alignment when assembling lateral bracing/bridging and field-cutting studs to length. Lateral bracing/bridging must be installed at the time the wall is erected.
17. Temporary bracing shall be provided and remain in place until work is completely stabilized.
18. Use a minimum of three studs at the corners of all exterior walls.
19. Use a minimum of three studs at the corners and intersections of all load-bearing walls.
20. All headers and built-up beams must be constructed of UNPUNCHED material only. Install insulation in built-up exterior framing members, such as headers, sills, boxed joists, and multiple stud jambs at openings, that are inaccessible upon completion of framing work.
21. Shop Drawings: Show layout, spacings, sizes, thicknesses, and types of cold-formed metal framing; show fastening and anchorage details, including mechanical fasteners. Show reinforcing channels, opening framing, supplemental framing, strapping, bracing, bridging, splices, accessories, connection details, and attachment to adjoining work.
22. For cold-formed metal framing indicated to comply with design loads, include structural analysis data signed and sealed by the qualified professional engineer (SSE) responsible for their preparation.
23. Structural Performance: Provide cold-formed metal framing capable of withstanding design loads within limits and under conditions indicated.
   - A. Design Loads: Reference the Design Criteria Notes.
   - B. Deflection Limits: Design framing systems to withstand the design loads without deflections greater than the following:
     1. Wall Framing: Horizontal deflection of 1/240 of the wall height for walls with flexible finishes, e.g. metal siding, wood siding, EIFS, etc.
     2. Wall Framing: Horizontal deflection of 1/360 of the wall height for walls with cementitious finishes, e.g. cement plaster.
     3. Wall Framing: Horizontal deflection of 1/600 of the wall height for walls with masonry veneer finishes.
     4. Floor Joist Framing: Vertical deflection of 1/480 of the span under live load. Limit deflection under total load (dead + live) to 1/360 of the span.
     5. Roof Framing: Vertical deflection of 1/360 of the span under live/snow load. Limit deflection under total load (dead + live) to 1/240 of the span.
24. Design framing systems to provide for movement of framing members without damage or overstressing, sheathing failure, undue strain on fasteners and anchors, or other detrimental effects when subject to an ambient temperature change of not less than 120 degrees F.
25. Design framing system to maintain clearances at openings, to allow for construction tolerances, and to accommodate live and/or snow load deflection of primary building structure as follows: Upward and downward movement of 3/4 inch.
26. Design exterior non load-bearing curtain wall framing to accommodate horizontal deflection without regard for contribution or sheathing materials.

MADE @ PLAINFIELD

CSO
8831 Keystone Crossing, Indianapolis, IN 46240
317.848.7800 | csoinc.net
© 2018 CSO Architects, Inc. All Rights Reserved

LHB
Lynch, Harrison & Brumleve, Inc.
550 Virginia Avenue
Indianapolis, IN 46203
P 317.423.1550
F 317.423.1551

PROJECT:
TOWN OF PLAINFIELD
MADE@ PLAINFIELD
Red Pride Drive, Plainfield, IN 46168

SCOPE DRAWINGS:
These drawings indicate the general scope of the project in terms of architectural design concept, the dimensions of the building, the major architectural elements and the type of structural, mechanical and electrical systems.
The drawings do not necessarily indicate or describe all work required for full performance and completion of the requirements of the Contract.
On the basis of the general scope indicated or described, the trade contractors shall furnish all items required for the proper execution and completion of the work.

REVISIONS:

1	ADDENDUM 1	2020-01-30

ISSUE DATE	DRAWN BY	CHECKED BY
01/16/2020	JRV	PAB

DRAWING TITLE:
GENERAL STRUCTURAL NOTES

CERTIFIED BY:
MARK D. LAVIER
REGISTERED
PE19400114
STATE OF INDIANA
PROFESSIONAL ENGINEER

DRAWING NUMBER
S001

PROJECT NUMBER
19004

ARCHITECTURALLY EXPOSED STRUCTURAL STEEL (AESS) - KEY

ID	CATEGORY / CHARACTERISTICS	AESS 4	AESS 3	AESS 2	AESS 1
		AISC CODE OF STANDARD PRACTICE SECTION 10 FOR AESS			
1.1	SURFACE PREPARATION TO SSPC-SP-6	X	X	X	X
1.2	SHARP EDGES GROUND SMOOTH	X	X	X	X
1.3	CONTINUOUS WELD APPEARANCE	X	X	X	X
1.4	STANDARD STRUCTURAL BOLTS	X	X	X	X
1.5	WELD SPATTERS REMOVED	X	X	X	X
2.1	VISUAL SAMPLES	X	X		
2.2	ONE-HALF STANDARD FABRICATION TOLERANCES	X	X	X	
2.3	FABRICATION MARKS NOT APPARENT	X	X	X	
2.4	WELDS UNIFORM AND SMOOTH	X	X	X	
3.1	MILL MARKS REMOVED	X	X		
3.2	BUTT AND PLUG WELDS GROUND SMOOTH AND FILLED	X	X		
3.3	HSS WELD SEAM ORIENTED FOR REDUCED VISIBILITY	X	X		
3.4	CROSS SECTIONAL ABUTTING SURFACE ALIGNED	X	X		
3.5	JOINT GAP TOLERANCES MINIMIZED	X	X		
3.6	ALL WELDED CONNECTIONS	OPTIONAL	OPTIONAL		
4.1	HSS SEAM NOT APPARENT	X			
4.2	WELDS CONTOURED AND BLENDED	X			
4.3	SURFACES FILED AND SANDED	X			
4.4	WELD SHOW-THROUGH MINIMIZED	X			

NOTES:

1.1 PRIOR TO BLAST CLEANING, GREASE AND OIL ARE REMOVED BY SOLVENT CLEANING TO MEET SSPC-SP1.
1.2 ROUGH SURFACES ARE DEBURRED AND GROUND SMOOTH. SHARP EDGES RESULTING FROM FLAME CUTTING, GRINDING AND ESPECIALLY SHEARING ARE SOFTENED.
1.3 INTERMITTENT WELDS ARE MADE CONTINUOUS, EITHER WITH ADDITIONAL WELDING, CAULKING OR BODY FILLER. FOR CORROSIVE ENVIROMENTS, ALL JOINTS ARE SEAL WELDED. SEAMS OF HOLLOW STRUCTURAL SECTIONS ARE ACCEPTABLE AS PRODUCED.
1.4 ALL BOLT HEADS IN CONNECTIONS ARE ON THE SAME SIDE, AS SPECIFIED, AND CONSISTENT FROM ONE CONNECTION TO ANOTHER.
1.5 WELD SPATTER, SLIVERS, SURFACE DISCONTINUITIES ARE REMOVED. WELD PROJECTION UP TO 1/16 IN. (2 MM) IS ACCEPTABLE FOR BUTT AND PLUG WELDED JOINTS.
2.1 VISUAL SAMPLES ARE EITHER A 3-D RENDERING, A PHYSICAL SAMPLE, A FIRST-OFF INSPECTION, A SCALED MOCK-UP OR A FULL-SCALE MOCK-UP, AS SPECIFED IN THE CONTRACT DOCUMENTS.
2.2 THESE TOLERANCES ARE ONE-HALF OF THOSE FOR STANDARD STRUCTURAL STEEL AS SPECIFIED IN THIS CODE.
2.3 MEMBERS MARKINGS DURING THE FABRICATION AND ERECTION PROCESSES ARE NOT VISIBLE.
3.1 ALL MILL MARKS ARE NOT VISIBLE IN THE FINISHED PRODUCT.
3.2 CAULKING OR BODY FILLER IS ACCEPTABLE.
3.3 SEAMS ARE ORIENTED AWAY FROM VIEW OR AS INDICATED IN THE CONTRACT DOCUMENTS.
3.4 THE MATCHING OF ABUTTING CROSS SECTIONS IS REQUIRED.
3.5 THIS CHARACTERISTIC IS SIMILAR TO 2.2 ABOVE. A CLEAR DISTANCE BETWEEN ABUTTING MEMBERS OF 1/8 IN. (3 MM) IS REQUIRED.
3.6 HIDDEN BOLTS MAY BE CONSIDERED.
4.1 HSS SEAMS ARE TREATED SO THEY ARE NOT APPARENT.
4.2 IN ADDIDTION TO A CONTOURED AND BLENDED APPEARANCE, WELDED TRANSITIONS BETWEEN MEMBERS ALSO ARE CONTOURED AND BLENDED.
4.3 THE STEEL SURFACE IMPERFECTIONS ARE FILLED AND SANDED.
4.4 WELD SHOW-THROUGH ON THE BACK SIDE OF A WELDED ELEMENT CAN BE MINIMIZED BY HAND GRINDING THE BACK SIDE SUR-FACE. THE DEGREE OF WELD-THROUGH IS A FUNCTION OF WELD SIZE AND MATERIAL.

DEFINITIONS:

1. 'FABRICATION TOLERANCE': Fabricate steel to one-half the normal tolerances as specified in the AISC "CODE OF STANDARD PRACTICE", Section 10.
2. 'WELDS GROUND SMOOTH': Fabricator (or Erector for field welds) shall grind welds of AESS smooth. For groove welds, the welds shall be made flush to the surfaces each side and be within +1/16", -0" of plate thickness.
3. 'CONTOURING & BLENDING OF WELDS': Where fillet welds are indicated to be ground-contoured or blended, oversize welds as required and grind to provide a smooth transition and to match profile on approved mockup.
4. 'CONTINUOUS WELDS': Where welding is noted on the Drawings, provide continuous welds of a uniform size and profile.
5. 'MINIMIZE WELD SHOW THROUGH': At locations where welding on the far side of an exposed connection occurs, grind distortion and marking of the steel to a smooth profile with adjacent material.
6. 'COPING AND BLOCKING TOLERANCE': Maintain a uniform gap of 1/8" +/- 1/32" at all copes and blocks.
7. 'JOINT GAP TOLERANCE': Maintain a uniform gap of 1/8" +/- 1/32" at all joint gaps.
8. 'PIECE MARKS HIDDEN': Fabricate such that piece marks are fully hidden from view in the final structure or made with such media to permit full removal after erection.
9. 'MILL MARK REMOVAL': Fabricator shall deliver steel with no mill marks (stenciled, stamped, raised, etc.) in exposed locations. Mill marks shall be omitted by cutting of mill material to appropriate lengths where possible. Where not possible, the Fabricator can fill and/or grind to a surface finish consistent with the approved mockup.
10. 'GRINDING OF SHEARED EDGES': Fabricator shall grind all edges of sheared, punched, or flame-cut steel to match the approved mockup.
11. 'ROLLED MEMBERS': Members specified to be rolled to a final curved shape shall be fully shaped in the shop and tied during shipping to prevent stress relieving. Distortion of the web or stem, and of the outstanding flanges or legs of angles shall be visibly acceptable to the Architect from a distance of 20 feet under any lighting condition determined by the Architect. Tolerances for the vertical and horizontal walls of rectangular HSS members after rolling shall be the specified dimension of +/- 1/2".
12. 'SEAL WELD TO CLOSE OPEN GAPS': Seal weld open ends of round and rectangular hollow structural sections with 3/8" closure plates. Provide continuous sealed welds at angle-to-gusset plate connections and similar locations where AESS is exposed to weather.
13. 'BOLT HEAD ORIENTATION': All bolt heads shall be oriented as indicated on the Drawings. Where bolt head alignment is specified, the orientation shall be noted for each connection on the Fabricator's Erection Drawings. Where not noted, the bolt heads in a given connection shall be oriented to one side.
14. 'REMOVAL OF FIELD-WELDING AIDS': Run-out tabs, erection bolts, temporary seats, and other steel members added to connections to allow for alignment, fit-up, and welding in the field shall be removed from the structure. Field groove welds shall be selected to eliminate the need for backup bars or to permit their removal after welding. Welds at run-out tabs shall be removed to match adjacent surfaces and ground smooth. Holes for erection bolts shall be plug-welded and ground smooth.
15. 'FILLING OF WELD ACCESS HOLES': Where holes must be cut in the web at the intersection with flanges on W-Shapes and structural tees to permit field welding of the flanges, they shall be filled. Filling shall be executed with proper procedures to minimize restraint and address thermal stresses in Group 4 and 5 Shapes.

LOCATIONS:

A. ALL PORTIONS OF HSS ROUND COLUMNS EXPOSED TO VIEW TO BE DESIGNATED AESS CATEGORY 2.
B. EXPOSED STEEL FRAMING & CONNECTIONS AT STAIRS & VESTIBULES TO BE DESIGNATED AESS CATEGORY 2.

COLUMN FOOTING SCHEDULE

FOOTING MARK	FOOTING SIZE WIDTH	x LENGTH	x DEPTH	REINFORCING (EACH WAY, U.N.O.)
F4.0	4'-0"	4'-0"	1'-2"	(4) #5 x 3'-6"
F5.0	5'-0"	5'-0"	1'-2"	(5) #5 x 4'-6"
F5.0T	5'-0"	5'-0"	2'-0"	(6) #6 x 4'-6" T&B
F6.0	6'-0"	6'-0"	1'-2"	(7) #5 x 5'-6"
F6.0T	6'-0"	6'-0"	2'-0"	(7) #6 x 5'-6" T&B
F7.0	7'-0"	7'-0"	1'-6"	(7) #6 x 6'-6"
F7.0T	7'-0"	7'-0"	2'-0"	(7) #7 x 6'-6" T&B
F8.0	8'-0"	8'-0"	1'-8"	(7) #7 x 7'-6"
F8.0T	8'-0"	8'-0"	2'-0"	(8) #7 x 7'-6" T&B
F9.0	9'-0"	9'-0"	1'-10"	(8) #7 x 8'-6"
F9.0T	9'-0"	9'-0"	2'-0"	(9) #7 x 8'-6" T&B
F10.0	10'-0"	10'-0"	2'-0"	(9) #7 x 9'-6"
F7x9T	7'-0"	9'-0"	1'-10"	(8) #6 x 8'-6" LW, T&B (8) #7 x 6'-6" SW, T&B
F8x10T	8'-0"	10'-0"	2'-0"	(7) #7 x 9'-6" LW, T&B (9) #7 x 7'-6" SW, T&B

NOTES:
1. CENTER FOOTINGS BENEATH COLUMNS, U.N.O.
2. ALL FOOTINGS MUST BE BOARD-FORMED, UNLESS CONDITIONS DESCRIBED IN FOUNDATION PLAN NOTE 16 ARE MET (REF. FOUNDATION PLANS).
3. INCREASE FOOTING DEPTH WHERE REQ'D TO ENCASE COLUMN ANCHOR RODS.
4. PROVIDE BOTH TOP & BOTTOM REINF. AT FOOTINGS WITH SUFFIX 'T'.

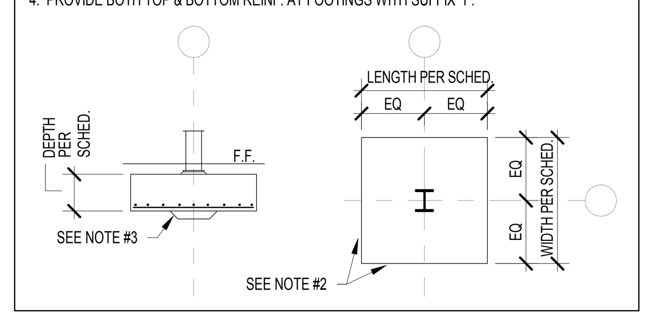

WALL FOOTING SCHEDULE

FTG. MARK	FOOTING SIZE WIDTH	DEPTH	FOOTING REINFORCING LONGITUDINAL	TRANSVERSE
WF24	2'-0"	1'-2"	(2) #5 x CONTINUOUS	#4 x 1'-6" @ 96" O.C.
WF30	2'-6"	1'-2"	(3) #5 x CONTINUOUS	#4 x 2'-0" @ 96" O.C.
WF36	3'-0"	1'-2"	(3) #5 x CONTINUOUS	#4 x 2'-6" @ 96" O.C.
WF42	3'-6"	1'-2"	(4) #5 x CONTINUOUS	#5 x 3'-0" @ 12" O.C.
WF48	4'-0"	1'-4"	(5) #5 x CONTINUOUS	#5 x 3'-6" @ 12" O.C.
WF60	5'-0"	1'-4"	(5) #6 x CONTINUOUS	#6 x 4'-6" @ 14" O.C.
WF72	6'-0"	1'-6"	(6) #6 x CONTINUOUS	#7 x 5'-6" @ 14" O.C.
WF84	7'-0"	1'-8"	(7) #6 x CONTINUOUS	#7 x 6'-6" @ 12" O.C.
RWF72	6'-0"	1'-6"	(6) #6 x CONTIN. T&B	#7 x 5'-6" @ 12" O.C. T&B

NOTES:
1. CENTER FOOTINGS BENEATH WALLS, U.N.O.
2. REF. DETAIL 9/S401 FOR TYP. CONSTRUCTION JOINT DETAIL.
3. LAP FOOTING REINF. A MIN. OF 30 BAR DIAMETERS.
4. PROVIDE BOTH TOP & BOTTOM REINF. AT FOOTINGS DENOTED WITH SUFFIX 'T' ON PLAN.

CONCRETE PIER SCHEDULE

PIER MARK	PIER SIZE L.	W.	PIER REINFORCING VERTICALS	TIES - SIZE & SPACING	DETAIL	CRITICAL HEIGHT
P20	1'-8"	1'-8"	(6) #6	#3 @ 10" OC (REF. NOTE #3)	D	≤ 2'-8"
			(4) #7	#3 @ 10" OC (REF. NOTE #3)	A	> 2'-8"
P24	2'-0"	2'-0"	(8) #6	#3 @ 12" OC (REF. NOTE #3)	B	≤ 2'-8"
			(4) #8	#3 @ 12" OC (REF. NOTE #3)	A	> 2'-8"

1. PROVIDE MIN. 1½" CLEAR TO PIER TIES.
2. "CRITICAL HEIGHT" DENOTES HEIGHT ABOVE WHICH LARGER DIAMETER VERTICALS WITH FEWER TIES MAY BE USED. REFER TO FOUNDATION PLAN(S) FOR T/P & T/F ELEVATIONS.
3. TYPICAL TIE SPACING, UNLESS NOTED OTHERWISE: REF. DETAIL **20/S401** FOR ADDITIONAL TIE SPACING REQUIREMENTS AT TOP & BOTTOM OF PIER. REQUIREMENTS VARY WITH TIE BAR SIZE AND COLUMN ANCHOR ROD DIAMETER.
4. DOWELS TO FUNCTION AS PIER VERTICALS FOR PIERS LESS THAN OR EQ. TO 5'-0" H. PROVIDE SEPARATE DOWELS & VERTICALS FOR PIERS GREATER THAN OR EQUAL TO 5'-0" H, UNLESS APPROVED.
5. CONTACT ENGINEER FOR DIRECTION IF COLUMN ANCHOR RODS FOUL WITH PIER TIES OR VERTICALS.
6. WHERE PIERS ARE INTEGRAL WITH CAST-IN-PLACE CONCRETE WALLS, CONTINUE HORIZONTAL WALL REINFORCING THROUGH PIERS.
7. PROVIDE STANDARD 90° HOOK AT TOP OF PIER VERTICALS AT ALL PIERS SUPPORTED BY A FOOTING WITH TOP REINFORCING (FOOTINGS WITH 'T' SUFFIX).

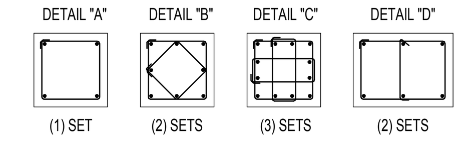

CONCRETE TIE BEAM SCHEDULE

TIE BEAM MARK	TIE BEAM SIZE WIDTH	DEPTH	TIE BEAM REINFORCING LONGITUDINAL	TIES/STIRRUPS	DETAIL
TB24x24	2'-0"	2'-0"	(10) #7	#4 @ 16" OC	A

1. PROVIDE MIN. 1½" CLEAR TO TIES.
2. FIRST (3) TIES TO BE SPACED AT 8" OC.
3. EXTEND LONGITUDINAL REINF. PAST COLUMN ANCHOR RODS TO FAR SIDE OF FOOTING OR PIER & PROVIDE STANDARD 90° HOOK.
4. TIE BEAMS MUST BE BOARD-FORMED, UNLESS APPROVED.

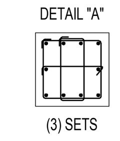

ABBREVIATION LEGEND

ABBR	DEFINITION
AB	ANCHOR BOLT
ABV	ABOVE
ACI	AMERICAN CONCRETE INSTITUTE
ACIP	AUGERED CAST IN PLACE PILE
ADDL	ADDITIONAL
ADDM	ADDENDUM
ADJ	ADJUSTABLE
AESS	ARCHITECTURALLY EXPOSED STRUCT. STL.
AFF	ABOVE FINISHED FLOOR
AGG	AGGREGATE
AISC	AMERICAN INSTITUTE OF STEEL CONSTR'N.
AISI	AMERICAN IRON & STEEL INSTITUTE
ALT	ALTERNATE
ANCH	ANCHORAGE
ANSI	AMERICAN NATIONAL STANDARDS INSTITUTE
APA	AMERICAN PLYWOOD ASSOCIATION
APPROX	APPROXIMATE
ARCH	ARCHITECT(URAL)
ASSY	ASSEMBLY
ASTM	AMERICAN SOCIETY FOR TESTING & MATLS.
AVG	AVERAGE
AWS	AMERICAN WELDING SOCIETY
B/'X'	BOTTOM OF REFERENCED ITEM
BB	BOND BEAM
BFF	BELOW FINISHED FLOOR
BLDG	BUILDING
BLKG	BLOCKING
BLW	BELOW
BM	BEAM
BOT	BOTTOM
BP	BASE PLATE
BRDG	BRIDGING
BRG	BEARING
BS	BOTH SIDES
BTWN	BETWEEN
C/C	CENTER TO CENTER
CAIS	CAISSON
CAPY	CAPACITY
CANT	CANTILEVER
CB	CONCRETE BEAM
CC	CONCRETE COLUMN
CFS	COLD-FORMED STEEL
CIP	CAST IN PLACE
CJ	CONTROL JOINT
CNJ	CONSTRUCTION JOINT
CL	CENTERLINE
CLR	CLEAR(ANCE)
CMU	CONCRETE MASONRY UNIT
COL	COLUMN
COLL	COLLATERAL
CONC	CONCRETE
CONSTR	CONSTRUCTION
CONT	CONTINUOUS
CRSI	CONCRETE REINFORCING STEEL INSTITUTE
CTR	CENTER
CTRD	CENTERED
CW	CONCRETE WALL
D	DEEP (DEPTH)
DBA	DEFORMED BAR ANCHOR
DEG	DEGREE
DIA	DIAMETER
DIAG	DIAGONAL
DIM	DIMENSION
DL	DEAD LOAD
DN	DOWN
DP	DRILLED PIER
DT	DOUBLE TEE
DTL	DETAIL
DWG	DRAWING
DWL	DOWEL
EA	EACH
ECC	ECCENTRIC
EF	EACH FACE
EIFS	EXTERIOR INSULATION & FINISH SYSTEM
EJ	EXPANSION JOINT
EL	ELEVATION
ELEC	ELECTRICAL
ELEV	ELEVATOR
ENG	ENGINEER
EQ	EQUAL
EQ SPA	EQUALLY SPACED (EQUAL SPACING)
EQUIV	EQUIVALENT
ES	EACH SIDE
EW	EACH WAY
EX	EXISTING
EXC	EXCAVATE (EXCAVATION)
EXT	EXTERIOR
FABR	FABRICATE (FABRICATOR)
FD	FLOOR DRAIN
FDN	FOUNDATION
FIN	FINISH
FF	FINISHED FLOOR
FLG	FLANGE
FS	FAR SIDE
FT	FOOT (FEET)
FTG	FOOTING
FV	FIELD VERIFY

ABBR	DEFINITION
GA	GAGE (GAUGE)
GALV	GALVANIZED
GB	GRADE BEAM
GC	GENERAL CONTRACTOR
GLULAM	GLUE LAMINATED WOOD
GRAN	GRANULAR
GWB	GYPSUM WALL BOARD
H	HIGH (HEIGHT)
HAS	HEADED ANCHOR STUD
HC	HOLLOW CORE
HD	HOLD DOWN
HK	HOOK
HORIZ	HORIZONTAL
HP	HIGH POINT
IBC	INTERNATIONAL (INDIANA) BUILDING CODE
ID	INSIDE DIAMETER
IF	INSIDE FACE
INCR	INCREASE
INFO	INFORMATION
INDOT	INDIANA DEPARTMENT OF TRANSPORTATION
INSUL	INSULATE (INSULATION)
INT	INTERIOR
INV	INVERT
ISO	ISOLATION
IT	INVERTED TEE BEAM
JBE	JOIST BEARING ELEVATION
JST	JOIST
JT	JOINT
KIP	1,000 POUNDS
KO	KNOCK OUT
KSF	KIPS PER SQUARE FOOT
KSI	KIPS PER SQUARE INCH
L	LONG (LENGTH)
Ld	TENSION DEVELOPMENT LENGTH
LB	'L' BEAM
LBS	POUNDS
LGSF	LIGHT GAUGE STEEL FRAMING
LL	LIVE LOAD
LLH	LONG-LEG HORIZONTAL
LLO	LONG-LEG OUTSTANDING
LLV	LONG-LEG VERTICAL
LNTL	LINTEL
LONG	LONGITUDINAL
LP	LOW POINT
LVL	LAMINATED VENEER LUMBER
LW	LONG WAY
LWC	LIGHTWEIGHT CONCRETE
MATL	MATERIAL
MAX	MAXIMUM
MC	MOMENT CONNECTION
MECH	MECHANICAL
MEZZ	MEZZANINE
MFR	MANUFACTURER
MIN	MINIMUM
MISC	MISCELLANEOUS
MO	MASONRY OPENING
MOM	MOMENT
MTL	METAL
NDS	NATIONAL DESIGN SPEC'N. FOR WOOD
NIC	NOT IN CONTRACT
NO	NUMBER
NOM	NOMINAL
NRC	NOISE REDUCTION COEFFICIENT
NS	NEAR SIDE
NTS	NOT TO SCALE
NWC	NORMAL WEIGHT CONCRETE
O/O	OUT TO OUT
OA	OVERALL
OC	ON CENTER
OD	OUTSIDE DIAMETER
OF	OUTSIDE FACE
OH	OPPOSITE HAND
OPNG	OPENING
OPP	OPPOSITE
OSB	ORIENTED STRAND BOARD

ABBR	DEFINITION
PAF	POWDER-ACTUATED FASTENER
PARTN	PARTITION
PC	PRECAST CONCRETE
PCF	POUNDS PER CUBIC FOOT
PCI	PRECAST CONCRETE INSTITUTE
PDF	POWER-DRIVEN FASTENER
PERIM	PERIMETER
PL	PLATE
PLBG	PLUMBING
PLF	POUNDS PER LINEAL FOOT
PLYWD	PLYWOOD
PNL	PANEL
PREFAB	PREFABRICATED
PROJ	PROJECTION
PSF	POUNDS PER SQUARE FOOT
PSI	POUNDS PER SQUARE INCH
PSL	PARALLEL STRAND LUMBER
PPT	PRESSURE PRESERVATIVE TREATED
PSC	PRESTRESSED CONCRETE
PT	POST TENSIONED
PTD	PAINTED
PRTN	PARTITION
PVMT	PAVEMENT
QTR	QUARTER
QTY	QUANTITY
R	RADIUS
RB	RECTANGULAR BEAM (PRECAST)
REF	REFER TO (REFERENCE)
REQD	REQUIRED
REV	REVISION (REVISED)
RF	ROOF
RO	ROUGH OPENING
RTU	ROOF TOP UNIT
RTN	RETURN
RW	RETAINING WALL
SBCA	STRUCTURAL BUILDING COMPONENTS ASSN.
SCT	STRUCTURAL CLAY TILE
SCHED	SCHEDULE
SDI	STEEL DECK INSTITUTE
SE	SLAB EDGE
SER	STRUCTURAL ENGINEER OF RECORD
SECT	SECTION
SHT	SHEET
SIM	SIMILAR
SJI	STEEL JOIST INSTITUTE
SL	SLOPE
SOG	SLAB ON GRADE
SPA	SPACE (S)(D)(ING)
SPECS	SPECIFICATIONS
SQ	SQUARE
SS	STAINLESS STEEL
SSE	SPECIALTY STRUCTURAL ENGINEER
STD	STANDARD
STIFF	STIFFENER
STL	STEEL
STR	STRENGTH
STRUCT	STRUCTURAL
SW	SHORT WAY
SW	SHEAR WALL (OCCASIONAL)
SYMM	SYMMETRICAL
T/'X'	TOP OF REFERENCED ITEM
T&B	TOP AND BOTTOM
T&G	TONGUE & GROOVE
TB	TIE BEAM
TD	TRENCH DRAIN
TEMP	TEMPERATURE
TF	TRENCH FOOTING
THK	THICK(NESS)
TOPG	TOPPING
TPI	TRUSS PLATE INSTITUTE
TRANSV	TRANSVERSE
TYP	TYPICAL
UNO	UNLESS NOTED OTHERWISE
UNEXC	UNEXCAVATED
VERT	VERTICAL
W	WIDE (WIDTH)
W/	WITH
WD	WOOD
WF	WALL FOOTING
WP	WORKING POINT
WPS	WELD PROCEDURE SPECIFICATION
WRDA	WATER REDUCING ADMIXTURE
WTCA	WOOD TRUSS COUNCIL OF AMERICA
WWF	WELDED WIRE FABRIC

MADE @ PLAINFIELD

CSO
8831 Keystone Crossing, Indianapolis, IN 46240
317.848.7800 | csoinc.net

© 2018 CSO Architects, Inc. All Rights Reserved

Lynch, Harrison & Brumleve, Inc.
P 317.423.1550
F 317.423.1551
550 Virginia Avenue
Indianapolis, IN 46203

PROJECT:
TOWN OF PLAINFIELD
MADE@ PLAINFIELD
Red Pride Drive, Plainfield, IN 46168

SCOPE DRAWINGS:
These drawings indicate the general scope of the project in terms of architectural design concept, the dimensions of the building, the major architectural elements and the type of structural, mechanical and electrical systems. The drawings do not necessarily indicate or describe all work required for full performance and completion of the requirements of the Contract. On the basis of the general scope indicated or described, the trade contractors shall furnish all items required for the proper execution and completion of the work.

REVISIONS:

ISSUE DATE	DRAWN BY	CHECKED BY
01/16/2020	JRV	PAB

DRAWING TITLE:
GENERAL STRUCTURAL NOTES & SCHEDULES

CERTIFIED BY:
MARK D. LAVIER
REGISTERED
PE19400114
STATE OF INDIANA
PROFESSIONAL ENGINEER

DRAWING NUMBER
S002

PROJECT NUMBER
19004

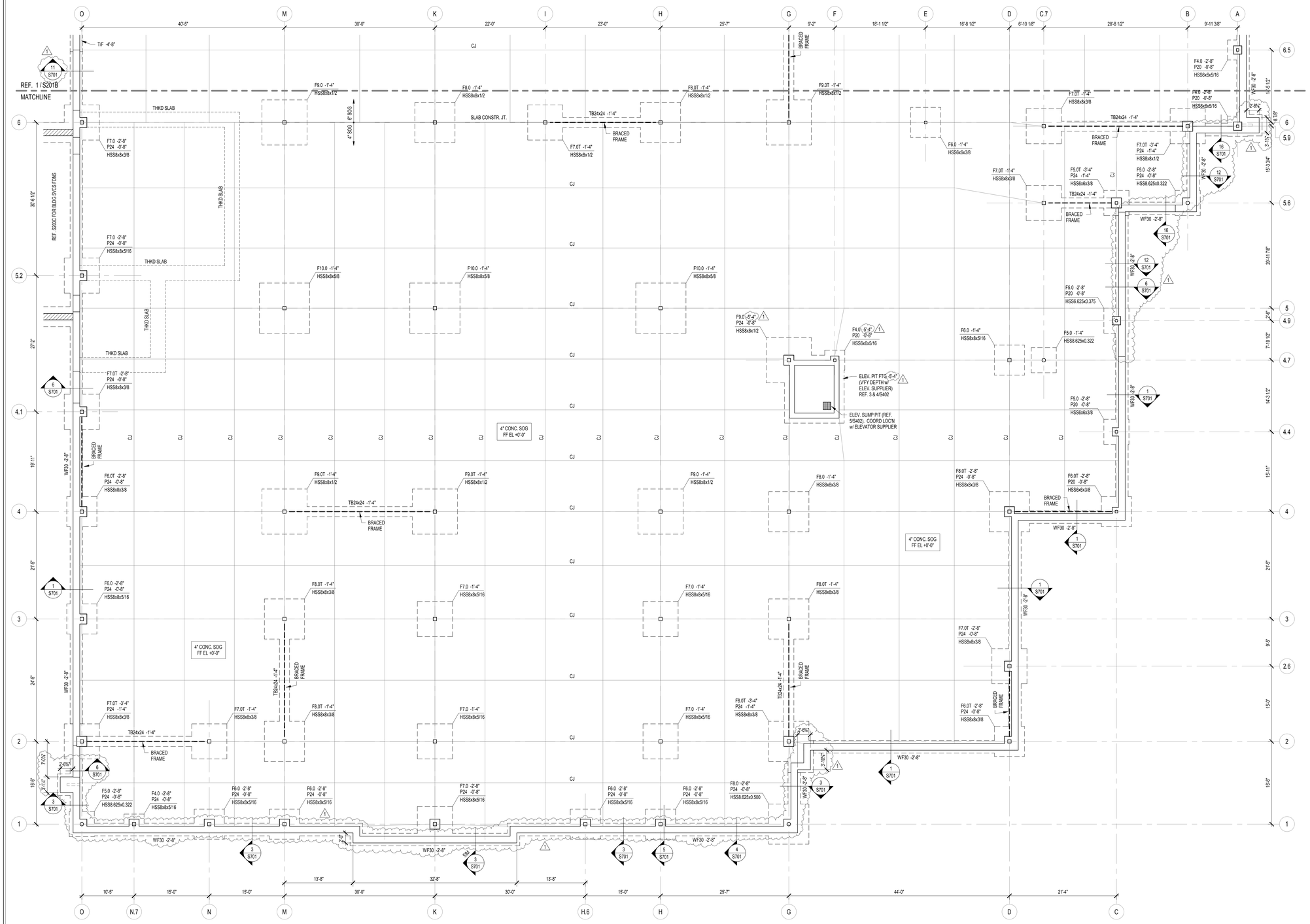

1 S201A FOUNDATION PLAN - AREA A
SCALE: 1/8" = 1'-0"

NORTH

FOUNDATION PLAN NOTES

1. REF. S001 & S002 FOR STRUCTURAL NOTES, DESIGN DATA, SCHEDULES & LEGENDS.
2. REF. THE S400 SERIES FOR TYPICAL FOUNDATION AND MASONRY DETAILS.
3. ALL CONTRACTORS ARE REQUIRED TO COORDINATE THEIR WORK WITH ALL DISCIPLINES TO AVOID CONFLICTS. THE MECHANICAL, ELECTRICAL, AND PLUMBING ASPECTS ARE NOT IN THE SCOPE OF THESE DRAWINGS. THEREFORE, ALL REQUIRED MATERIALS AND WORK MAY NOT BE INDICATED.
4. ALL ELEVATIONS ARE REFERENCED FROM THE FIRST FLOOR FIN. FLOOR ELEVATION +0'-0". COORD. USGS ELEVATION WITH CIVIL DWGS.
5. ALL WALLS SHALL BE LAID OUT FROM THE ARCHITECTURAL DRAWINGS.
6. REF. ARCH. DRAWINGS. FOR ALL DIMENSIONS NOT SHOWN. CONTRACTOR SHALL VERIFY ALL DIMENSIONS PRIOR TO CONSTRUCTION AND IMMEDIATELY NOTIFY ARCHITECT/ENGINEER OF ANY DISCREPANCIES.
7. COORDINATE EXACT SIZE & LOCATION OF ALL MECHANICAL OPENINGS IN FDN. WALLS WITH THE MECHANICAL, ELECTRICAL, & PLUMBING CONTRACTORS.
8. NOTE: PERIMETER FOOTINGS SHALL BE LOWERED AND/OR SLEEVED TO PASS BELOW PLUMBING LINES (E.G., SANITARY & STORM LINES, WATER LINES, ETC.) SHOWN ON THE PLUMBING DRAWINGS. PROVIDE FOOTING STEPS AS REQUIRED PER THE TYPICAL DETAILS ON S401.
9. ALL SLAB RECESSES SHALL BE LOCATED PER THE ARCHITECTURAL DRAWINGS. COORDINATE DEPTHS OF ALL SLAB RECESSES WITH THE ARCHITECTURAL DRAWINGS AND/OR THE FLOORING SUPPLIER.
10. PROVIDE CMU REINFORCING AS NOTED ON PLANS & SECTIONS. IF NOT SHOWN ELSEWHERE, MINIMUM CMU WALL REINFORCING TO BE #5 VERTS @ 48" OC. PROVIDE OPEN-CORE BOND BEAMS AT TOPS OF WALLS, AT CHANGES IN CMU THICKNESS, AND WHERE INDICATED ON PLANS & SECTIONS (10'-0" OC MAX VERTICAL SPACING). PROVIDE 1/2 OF INTERRUPTED VERTICALS AT JAMBS OF OPENINGS AND PROVIDE ADDITIONAL VERT'S. AT ENDS OF WALLS.
11. COORDINATE REINFORCING DOWELS FOR CMU VERTICAL REINFORCING WITH REINF. NOTED ON PLANS & SECTIONS.
12. GROUT ALL CORES OF CMU SOLID BELOW FIN. FLOOR ELEVATION.
13. PROVIDE THICKENED SLAB UNDER ALL INTERIOR CMU WALLS WITHOUT FOOTINGS. SEE S401 FOR THICKENED SLAB DETAIL. REF. THE ARCHITECTURAL DRAWINGS FOR LOCATIONS OF CMU WALLS.
14. ALL FOOTINGS SHALL BEAR ON APPROVED SOIL. UNDERCUT AS REQ'D. TO SUITABLE BEARING MATERIAL AS DETERMINED BY THE GEOTECHNICAL TESTING AGENCY. REF. TYPICAL FOOTING UNDERCUT DETAILS ON S402.
15. PROVIDE CONTROL/CONTRACTION JOINTS IN SLABS ON GRADE (REF. TYPICAL DETAILS ON S401). ALL JOINTS IN SLABS TO RECEIVE THIN OR THICK-SET TERRAZZO, CERAMIC OR PORCELAIN TILE, VINYL-COMPOSITION TILE (VCT) OR VINYL SHEET GOODS, EPOXY OR SIMILAR THIN-FILM FINISH FLOORING SHALL BE CAREFULLY COORDINATED WITH THE FLOORING CONTRACTOR. THE CONTRACTOR SHALL SUBMIT SLAB JOINT LAYOUT TO ARCHITECT/ENGINEER FOR REVIEW PRIOR TO PLACING SLABS.
16. EARTH-FORMED FOOTINGS ARE ACCEPTABLE WHERE SOIL CONDITIONS PERMIT (I.E. WHERE THE BANKS OF THE EXCAVATION WILL HOLD WITHOUT CAVING AND SLOUGHING). HOWEVER, THE PLAN DIMENSION OF EARTH- FORMED FOOTINGS MUST BE INCREASED BY 2" ALONG ALL EDGES TO ACCOUNT FOR INACCURACIES ASSOCIATED WITH EARTH-FORMING (I.E. 2'-0" WIDE WALL FOOTINGS SHALL BE 2'-4" WIDE AND 5'-0" SQUARE COLUMN FOOTINGS SHALL BE 5'-4" SQUARE).
17. PROVIDE WEAKENED-PLANE CONTRACTION/CONTROL JOINTS IN CIP FOUNDATION WALLS. LOCATE ON ONE SIDE OF CIP PIERS CAST MONOLITHICALLY WITH FOUNDATION WALLS WHERE POSSIBLE. (MAX. SPACING 40 FT OC).
18. PLAN LEGEND:

FF	DENOTES FIN. FLOOR
T/X	DENOTES TOP OF FTG, SLAB, PIER, ETC.
B/X	DENOTES BOTTOM OF FTG, GRADE BEAM, ETC.
CJ	DENOTES SLAB ON GRADE CONTROL/ CONTRACTION JOINT
CW12	DENOTES CIP CONC. WALL THICKNESS IN INCHES
WF24 -2'-8"	DENOTES WALL FOOTING MARK & TOP OF FOOTING ELEVATION (REF. WALL FTG SCHEDULE)
TB24x24 -1'-4"	DENOTES TIE BEAM MARK & T/BEAM ELEVATION (REF. TIE BEAM SCHEDULE)
	DENOTES WALL FOOTING WITH STEPS. REF. TYP. DETAIL ON S401
	DENOTES CMU FOUNDATION WALL
	DENOTES CMU FDN. WALL HELD DOWN AT OPENINGS
	DENOTES THICKENED SLAB UNDER INTERIOR NON-LOAD BEARING CMU WALLS
4" CONC. SOG T/SLAB +0'-0"	DENOTES SLAB ON GRADE THICKNESS & T/SLAB ELEVATION. ALL SLABS ON GRADE TO BE PLACED ON 6" MIN. COMPACTED GRANULAR FILL & VAPOR BARRIER/RETARDER PER SPECS. PROVIDE THE FOLLOWING WELDED WIRE FABRIC REINFORCING: 4" SLAB: 6x6-W1.4xW1.4 WWF 6" SLAB: 6x6-W2.9xW2.9 WWF

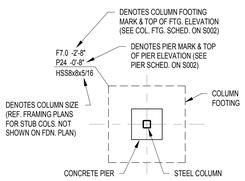

MADE @ PLAINFIELD

CSO
8831 Keystone Crossing, Indianapolis, IN 46240
317.848.7600 | csoinc.net
© 2019 CSO Architects, Inc. All Rights Reserved

Lynch, Harrison & Brumleve, Inc.
550 Virginia Avenue
Indianapolis, IN 46203
P 317.423.1550
F 317.423.1551

PROJECT:
TOWN OF PLAINFIELD
MADE@ PLAINFIELD
Red Pride Drive, Plainfield, IN 46168

SCOPE DRAWINGS:
These drawings indicate the general scope of the project in terms of architectural design concept, the dimensions of the building, the type of construction and the type of structural, mechanical and electrical systems.
The drawings do not necessarily indicate or describe all work required for full performance and completion of the requirements of the Contract.
In addition to the indicated scope indicated or described, the trade contractors shall furnish all items required for the proper execution and completion of the work.

REVISIONS:

1	ADDENDUM 1	2020-01-30

ISSUE DATE	DRAWN BY	CHECKED BY
01/16/2020	JRV	PAB

DRAWING TITLE:
FOUNDATION PLAN - AREA A

CERTIFIED BY:
MARK D. LAVLER
REGISTERED
PE19400114
STATE OF INDIANA
PROFESSIONAL ENGINEER

DRAWING NUMBER
S201A

PROJECT NUMBER
19004

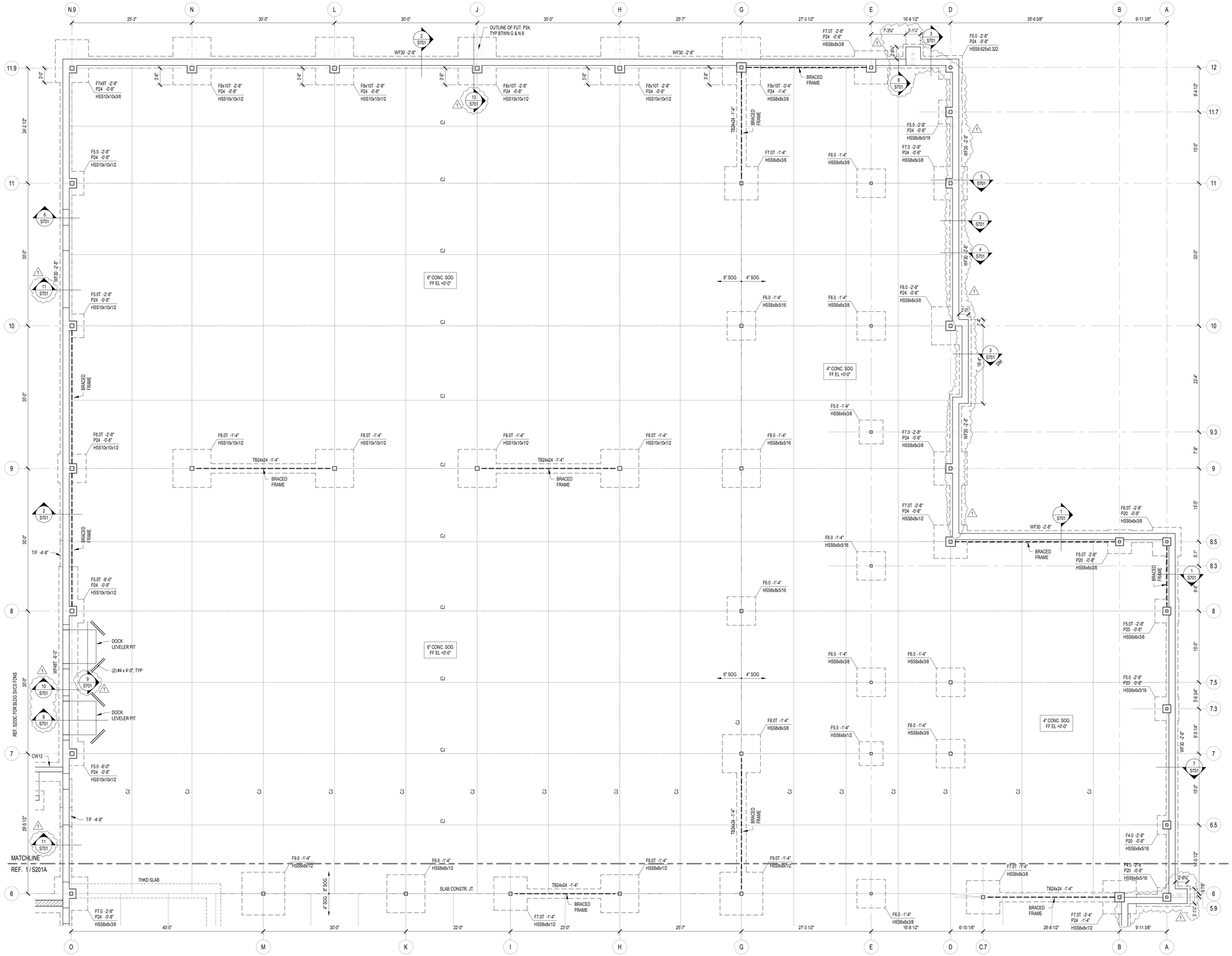

1 S201B FOUNDATION PLAN - AREA B

SCALE: 1/8" = 1'-0"

NORTH

FOUNDATION PLAN NOTES

1. REF. S001 & S002 FOR STRUCTURAL NOTES, DESIGN DATA, SCHEDULES & LEGENDS.
2. REF. THE S400 SERIES FOR TYPICAL FOUNDATION AND MASONRY DETAILS.
3. ALL CONTRACTORS ARE REQUIRED TO COORDINATE THEIR WORK WITH ALL DISCIPLINES TO AVOID CONFLICTS. THE MECHANICAL, ELECTRICAL, AND PLUMBING ASPECTS ARE NOT IN THE SCOPE OF THESE DRAWINGS. THEREFORE, ALL REQUIRED MATERIALS AND WORK MAY NOT BE INDICATED.
4. ALL ELEVATIONS ARE REFERENCED FROM THE FIRST FLOOR FIN. FLOOR ELEVATION +0'-0". COORD. USGS ELEVATION WITH CIVIL DWGS.
5. ALL WALLS SHALL BE LAID OUT FROM THE ARCHITECTURAL DRAWINGS.
6. REF. ARCH. DRAWINGS. FOR ALL DIMENSIONS NOT SHOWN. CONTRACTOR SHALL VERIFY ALL DIMENSIONS PRIOR TO CONSTRUCTION AND IMMEDIATELY NOTIFY ARCHITECT/ENGINEER OF ANY DISCREPANCIES.
7. COORDINATE EXACT SIZE & LOCATION OF ALL MECHANICAL OPENINGS IN FDN. WALLS WITH THE MECHANICAL, ELECTRICAL & PLUMBING CONTRACTORS.
8. NOTE: PERIMETER FOOTINGS SHALL BE LOWERED AND/OR SLEEVED TO PASS BELOW PLUMBING LINES (E.G., SANITARY & STORM LINES, WATER LINES, ETC.) SHOWN ON THE PLUMBING DRAWINGS. PROVIDE FOOTING STEPS AS REQUIRED PER THE TYPICAL DETAILS ON S401.
9. ALL SLAB RECESSES SHALL BE LOCATED PER THE ARCHITECTURAL DRAWINGS. COORDINATE DEPTHS OF ALL SLAB RECESSES WITH THE ARCHITECTURAL DRAWINGS AND/OR THE FLOORING SUPPLIER.
10. PROVIDE CMU REINFORCING AS NOTED ON PLANS & SECTIONS. IF NOT SHOWN ELSEWHERE, MINIMUM CMU WALL REINFORCING TO BE #5 VERTS @ 48" OC. PROVIDE OPEN-CORE BOND BEAMS AT TOPS OF WALLS, AT CHANGES IN CMU THICKNESS, AND WHERE INDICATED ON PLANS & SECTIONS (10'-0" OC MAX VERTICAL SPACING). PROVIDE 1/2 OF INTERRUPTED VERTICALS AT JAMBS OF OPENINGS AND PROVIDE ADDITIONAL VERT'S. AT ENDS OF WALLS.
11. COORDINATE REINFORCING DOWELS FOR CMU VERTICAL REINFORCING WITH REINF. NOTED ON PLANS & SECTIONS.
12. GROUT ALL CORES OF CMU SOLID BELOW FIN. FLOOR ELEVATION.
13. PROVIDE THICKENED SLAB UNDER ALL INTERIOR CMU WALLS WITHOUT FOOTINGS. SEE S401 FOR THICKENED SLAB DETAIL. REF. THE ARCHITECTURAL DRAWINGS FOR LOCATIONS OF CMU WALLS.
14. ALL FOOTINGS SHALL BEAR ON APPROVED SOIL. UNDERCUT AS REQ'D. TO SUITABLE BEARING MATERIAL AS DETERMINED BY THE GEOTECHNICAL TESTING AGENCY. REF. TYPICAL FOOTING UNDERCUT DETAILS ON S402.
15. PROVIDE CONTROL/CONTRACTION JOINTS IN SLABS ON GRADE (REF. TYPICAL DETAILS ON S401). ALL JOINTS IN SLABS TO RECEIVE THIN OR THICK-SET TERRAZZO, CERAMIC OR PORCELAIN TILE, VINYL-COMPOSITION TILE (VCT) OR VINYL SHEET GOODS, EPOXY OR SIMILAR THIN-FILM FINISH FLOORING SHALL BE CAREFULLY COORDINATED WITH THE FLOORING CONTRACTOR. THE CONTRACTOR SHALL SUBMIT SLAB JOINT LAYOUT TO ARCHITECT/ENGINEER FOR REVIEW PRIOR TO PLACING SLABS.
16. EARTH-FORMED FOOTINGS ARE ACCEPTABLE WHERE SOIL CONDITIONS PERMIT (I.E. WHERE THE BANKS OF THE EXCAVATION WILL HOLD WITHOUT CAVING AND SLOUGHING). HOWEVER, THE PLAN DIMENSION OF EARTH- FORMED FOOTINGS MUST BE INCREASED BY 2" ALONG ALL EDGES TO ACCOUNT FOR INACCURACIES ASSOCIATED WITH EARTH-FORMING (I.E. 2'-0" WIDE WALL FOOTINGS SHALL BE 2'-4" WIDE AND 5'-0" SQUARE COLUMN FOOTINGS SHALL BE 5'-4" SQUARE).
17. PROVIDE WEAKENED-PLANE CONTRACTION/CONTROL JOINTS IN CIP FOUNDATION WALLS. LOCATE ON ONE SIDE OF CIP PIERS CAST MONOLITHICALLY WITH FOUNDATION WALLS WHERE POSSIBLE. (MAX. SPACING 40 FT OC).
18. PLAN LEGEND:

FF	DENOTES FIN. FLOOR
T/X'	DENOTES TOP OF FTG, SLAB, PIER, ETC.
B/X'	DENOTES BOTTOM OF FTG, GRADE BEAM, ETC.
CJ	DENOTES SLAB ON GRADE CONTROL/ CONTRACTION JOINT
CW12	DENOTES CIP CONC. WALL THICKNESS IN INCHES
WF24 -2'-8"	DENOTES WALL FOOTING MARK & TOP OF FOOTING ELEVATION (REF. WALL FTG SCHEDULE)
TB24x24 -1'-4"	DENOTES TIE BEAM MARK & T/BEAM ELEVATION (REF. TIE BEAM SCHEDULE)
	DENOTES WALL FOOTING WITH STEPS. REF. TYP. DETAIL ON S401
	DENOTES CMU FOUNDATION WALL
	DENOTES CMU FDN. WALL HELD DOWN AT OPENINGS
	DENOTES THICKENED SLAB UNDER INTERIOR NON-LOAD BEARING CMU WALLS
4" CONC. SOG T/SLAB +0'-0"	DENOTES SLAB ON GRADE THICKNESS & T/SLAB ELEVATION. ALL SLABS ON GRADE TO BE PLACED ON 6" MIN. COMPACTED GRANULAR FILL & VAPOR BARRIER/RETARDER PER SPECS. PROVIDE THE FOLLOWING WELDED WIRE FABRIC REINFORCING: 4" SLAB: 6x6-W1.4xW1.4 WWF 6" SLAB: 6x6-W2.9xW2.9 WWF

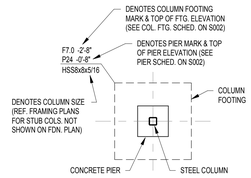

MADE @ PLAINFIELD

CSO
8831 Keystone Crossing, Indianapolis, IN 46240
317.848.7600 | csoinc.net

© 2019 CSO Architects, Inc. All Rights Reserved

Lynch, Harrison & Brumleve, Inc.
P 317.423.1550
F 317.423.1551
550 Virginia Avenue
Indianapolis, IN 46203

PROJECT:

TOWN OF PLAINFIELD
MADE@ PLAINFIELD

Red Pride Drive, Plainfield, IN 46168

SCOPE DRAWINGS:

These drawings indicate the general scope of the project in terms of architectural design concept, the dimensions of the building, the major architectural elements and the type of construction and finishes to be provided and used.

The drawings do not necessarily indicate or describe all work required for full performance and completion of the architectural portion of the work.

On the basis of the general scope indicated or described, the trade contractors shall furnish all items required for the proper execution and completion of the work.

REVISIONS:

1	ADDENDUM 1	2020-01-30

ISSUE DATE	DRAWN BY	CHECKED BY
01/16/2020	JRV	PAB

DRAWING TITLE:

FOUNDATION PLAN - AREA B

CERTIFIED BY:

MARK D. LAWLER
REGISTERED
PE19400114
STATE OF INDIANA
PROFESSIONAL ENGINEER

DRAWING NUMBER

S201B

PROJECT NUMBER

19004

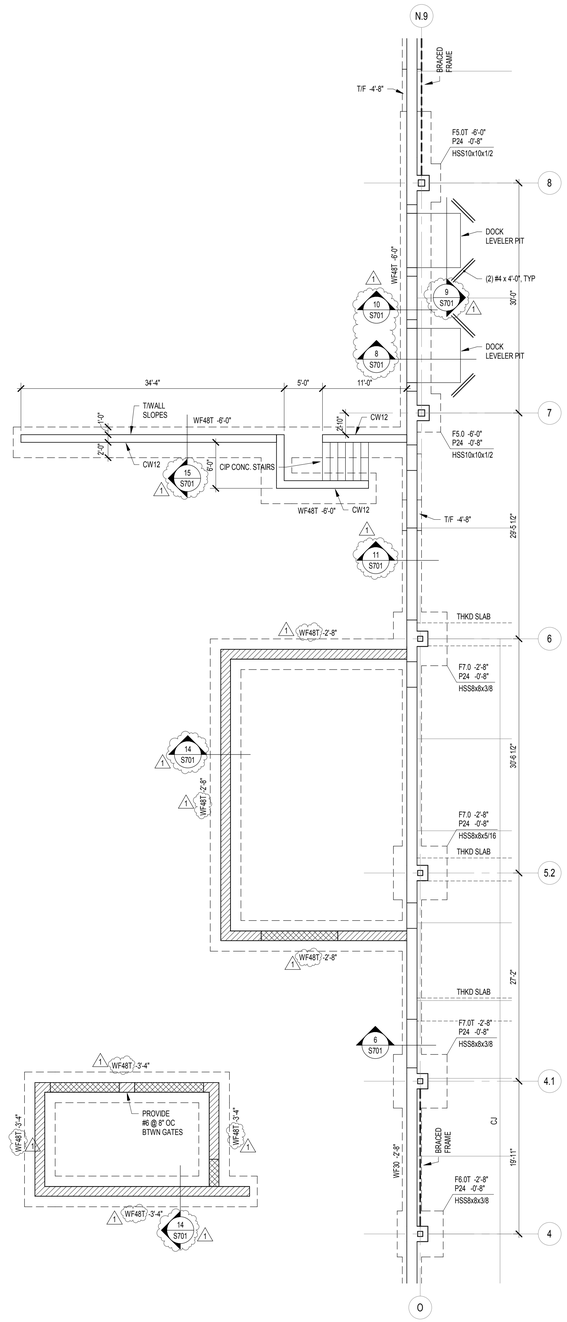

1 S201C **FOUNDATION PLAN - BUILDING SERVICES**

SCALE: 1/8" = 1'-0"

NORTH

FOUNDATION PLAN NOTES

1. REF. S001 & S002 FOR STRUCTURAL NOTES, DESIGN DATA, SCHEDULES & LEGENDS.
2. REF. THE S400 SERIES FOR TYPICAL FOUNDATION AND MASONRY DETAILS.
3. ALL CONTRACTORS ARE REQUIRED TO COORDINATE THEIR WORK WITH ALL DISCIPLINES TO AVOID CONFLICTS. THE MECHANICAL, ELECTRICAL, AND PLUMBING ASPECTS ARE NOT IN THE SCOPE OF THESE DRAWINGS. THEREFORE, ALL REQUIRED MATERIALS AND WORK MAY NOT BE INDICATED.
4. ALL ELEVATIONS ARE REFERENCED FROM THE FIRST FLOOR FIN. FLOOR ELEVATION +0'-0". COORD. USGS ELEVATION WITH CIVIL DWGS.
5. ALL WALLS SHALL BE LAID OUT FROM THE ARCHITECTURAL DRAWINGS.
6. REF. ARCH. DRAWINGS. FOR ALL DIMENSIONS NOT SHOWN. CONTRACTOR SHALL VERIFY ALL DIMENSIONS PRIOR TO CONSTRUCTION AND IMMEDIATELY NOTIFY ARCHITECT/ENGINEER OF ANY DISCREPANCIES.
7. COORDINATE EXACT SIZE & LOCATION OF ALL MECHANICAL OPENINGS IN FDN. WALLS WITH THE MECHANICAL, ELECTRICAL & PLUMBING CONTRACTORS.
8. NOTE: PERIMETER FOOTINGS SHALL BE LOWERED AND/OR SLEEVED TO PASS BELOW PLUMBING LINES (E.G., SANITARY & STORM LINES, WATER LINES, ETC.) SHOWN ON THE PLUMBING DRAWINGS. PROVIDE FOOTING STEPS AS REQUIRED PER THE TYPICAL DETAILS ON S401.
9. ALL SLAB RECESSES SHALL BE LOCATED PER THE ARCHITECTURAL DRAWINGS. COORDINATE DEPTHS OF ALL SLAB RECESSES WITH THE ARCHITECTURAL DRAWINGS AND/OR THE FLOORING SUPPLIER.
10. PROVIDE CMU REINFORCING AS NOTED ON PLANS & SECTIONS. IF NOT SHOWN ELSEWHERE, MINIMUM CMU WALL REINFORCING TO BE #5 VERTS @ 48" OC. PROVIDE OPEN-CORE BOND BEAMS AT TOPS OF WALLS, AT CHANGES IN CMU THICKNESS, AND WHERE INDICATED ON PLANS & SECTIONS (10'-0" OC MAX VERTICAL SPACING). PROVIDE 1/2 OF INTERRUPTED VERTICALS AT JAMBS OF OPENINGS AND PROVIDE ADDITIONAL VERT'S. AT ENDS OF WALLS.
11. COORDINATE REINFORCING DOWELS FOR CMU VERTICAL REINFORCING WITH REINF. NOTED ON PLANS & SECTIONS.
12. GROUT ALL CORES OF CMU SOLID BELOW FIN. FLOOR ELEVATION.
13. PROVIDE THICKENED SLAB UNDER ALL INTERIOR CMU WALLS WITHOUT FOOTINGS. SEE S401 FOR THICKENED SLAB DETAIL. REF. THE ARCHITECTURAL DRAWINGS FOR LOCATIONS OF CMU WALLS.
14. ALL FOOTINGS SHALL BEAR ON APPROVED SOIL. UNDERCUT AS REQ'D. TO SUITABLE BEARING MATERIAL AS DETERMINED BY THE GEOTECHNICAL TESTING AGENCY. REF. TYPICAL FOOTING UNDERCUT DETAILS ON S402.
15. PROVIDE CONTROL/CONTRACTION JOINTS IN SLABS ON GRADE (REF. TYPICAL DETAILS ON S401). ALL JOINTS IN SLABS TO RECEIVE THIN OR THICK-SET TERRAZZO, CERAMIC OR PORCELAIN TILE, VINYL-COMPOSITION TILE (VCT) OR VINYL SHEET GOODS, EPOXY OR SIMILAR THIN-FILM FINISH FLOORING SHALL BE CAREFULLY COORDINATED WITH THE FLOORING CONTRACTOR. THE CONTRACTOR SHALL SUBMIT SLAB JOINT LAYOUT TO ARCHITECT/ENGINEER FOR REVIEW PRIOR TO PLACING SLABS.
16. EARTH-FORMED FOOTINGS ARE ACCEPTABLE WHERE SOIL CONDITIONS PERMIT (I.E. WHERE THE BANKS OF THE EXCAVATION WILL HOLD WITHOUT CAVING AND SLOUGHING). HOWEVER, THE PLAN DIMENSION OF EARTH- FORMED FOOTINGS MUST BE INCREASED BY 2" ALONG ALL EDGES TO ACCOUNT FOR INACCURACIES ASSOCIATED WITH EARTH-FORMING (I.E. 2'-0" WIDE WALL FOOTINGS SHALL BE 2'-4" WIDE AND 5'-0" SQUARE COLUMN FOOTINGS SHALL BE 5'-4" SQUARE).
17. PROVIDE WEAKENED-PLANE CONTRACTION/CONTROL JOINTS IN CIP FOUNDATION WALLS. LOCATE ON ONE SIDE OF CIP PIERS CAST MONOLITHICALLY WITH FOUNDATION WALLS WHERE POSSIBLE. (MAX. SPACING 40 FT OC).
18. PLAN LEGEND:

FF	DENOTES FIN. FLOOR
T/X'	DENOTES TOP OF FTG, SLAB, PIER, ETC.
B/X'	DENOTES BOTTOM OF FTG, GRADE BEAM, ETC.
CJ	DENOTES SLAB ON GRADE CONTROL/ CONTRACTION JOINT
CW12	DENOTES CIP CONC. WALL THICKNESS IN INCHES
WF24 -2'-8"	DENOTES WALL FOOTING MARK & TOP OF FOOTING ELEVATION (REF. WALL FTG SCHEDULE)
TB24x24 -1'-4"	DENOTES TIE BEAM MARK & T/BEAM ELEVATION (REF. TIE BEAM SCHEDULE)
	DENOTES WALL FOOTING WITH STEPS. REF. TYP. DETAIL ON S401
	DENOTES CMU FOUNDATION WALL
	DENOTES CMU FDN. WALL HELD DOWN AT OPENINGS
	DENOTES THICKENED SLAB UNDER INTERIOR NON-LOAD BEARING CMU WALLS
4" CONC. SOG T/SLAB +0'-0"	DENOTES SLAB ON GRADE THICKNESS & T/SLAB ELEVATION. ALL SLABS ON GRADE TO BE PLACED ON 6" MIN. COMPACTED GRANULAR FILL & VAPOR BARRER/RETARDER PER SPECS. PROVIDE THE FOLLOWING WELDED WIRE FABRIC REINFORCING: 4" SLAB: 6x6-W1.4xW1.4 WWF 6" SLAB: 6x6-W2.9xW2.9 WWF

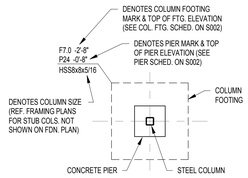

CSO
8831 Keystone Crossing, Indianapolis, IN 46240
317.848.7600 | csoinc.net

© 2019 CSO Architects, Inc. All Rights Reserved

Lynch, Harrison & Brumleve, Inc.
550 Virginia Avenue
Indianapolis, IN 46203
P 317.423.1550
F 317.423.1551

PROJECT:
TOWN OF PLAINFIELD
MADE@ PLAINFIELD
Red Pride Drive, Plainfield, IN 46168

SCOPE DRAWINGS:

These drawings indicate the general scope of the project in terms of dimensions, materials, and the general layout of the building, the major architectural elements and the type of structural, mechanical and electrical systems.

The specifications and contract documents describe all work required for full performance and completion of the requirements of the Contract.

On the basis of the general scope indicated or described, the trade contractors shall furnish all items required for the proper execution and completion of the work.

REVISIONS:

1	ADDENDUM 1	2020-01-30

ISSUE DATE	DRAWN BY	CHECKED BY
01/16/2020	JRV	PAB

DRAWING TITLE:
FOUNDATION PLAN - BUILDING SERVICES

CERTIFIED BY:
MARK D. LAVICKA REGISTERED PE19400014 STATE OF INDIANA PROFESSIONAL ENGINEER

DRAWING NUMBER
S201C

PROJECT NUMBER
19004

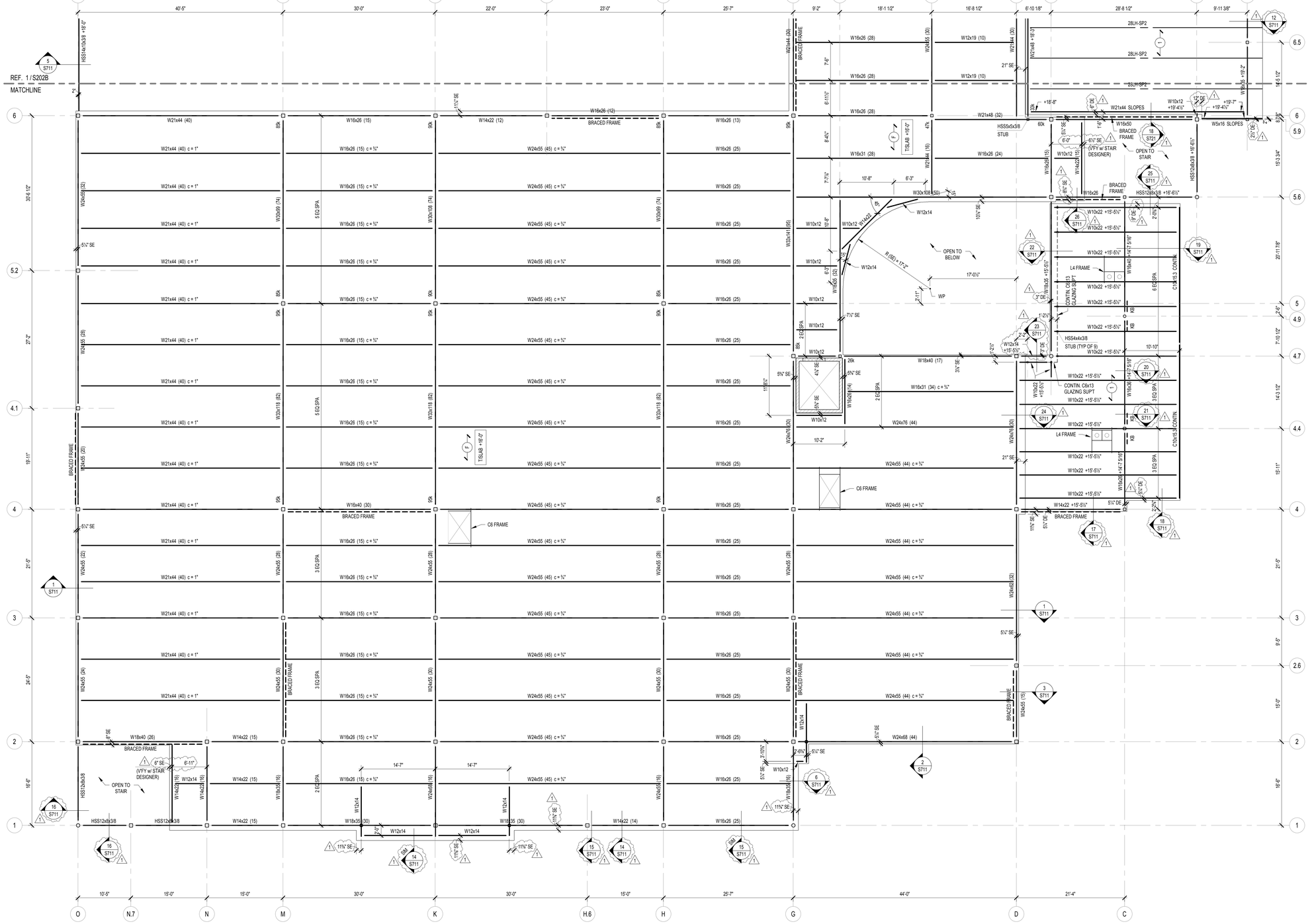

1 S202A SECOND FLOOR FRAMING PLAN - AREA A

SCALE: 1/8" = 1'-0"

NORTH

FRAMING PLAN NOTES

1. REF. S001 & S002 FOR STRUCTURAL NOTES, DESIGN DATA, SCHEDULES & LEGENDS.
2. REF. THE S400 SERIES FOR TYPICAL FRAMING AND MASONRY DETAILS.
3. ALL CONTRACTORS ARE REQUIRED TO COORDINATE THEIR WORK WITH ALL DISCIPLINES TO AVOID CONFLICTS. THE MECHANICAL, ELECTRICAL, AND PLUMBING ASPECTS ARE NOT IN THE SCOPE OF THESE DRAWINGS. THEREFORE, ALL REQUIRED MATERIALS AND WORK MAY NOT BE INDICATED.
4. ALL ELEVATIONS ARE REFERENCED FROM THE FIRST FLOOR FIN. FLOOR ELEVATION +0'-0". COORD. USGS ELEVATION WITH CIVIL DWGS.
5. ALL WALLS SHALL BE LAID OUT FROM THE ARCHITECTURAL DRAWINGS.
6. REF. ARCH. DRAWINGS. FOR ALL DIMENSIONS NOT SHOWN. CONTRACTOR SHALL VERIFY ALL DIMENSIONS PRIOR TO CONSTRUCTION AND IMMEDIATELY NOTIFY ARCHITECT/ENGINEER OF ANY DISCREPANCIES.
7. COORDINATE EXACT SIZE & LOCATION OF ANY MECHANICAL OPENINGS IN FLOOR SLAB, ROOF DECK, OR WALLS WITH THE MEP CONTRACTOR(S). LOCATION & SIZE OF ALL DUCT OPENINGS, GRILLES, ETC. SHALL BE VERIFIED PRIOR TO CONSTRUCTION.
8. ALL ELEVATIONS SHOWN ON PLAN INDICATE TOP OF STEEL BEAM UNLESS NOTED OTHERWISE.
9. PROVIDE CHANNEL FRAMES AT ALL SUPPORTED SLAB OPENINGS PER TYPICAL DETAIL ON S404. COORDINATE EXACT NUMBER, LOCATIONS & DIMENSIONS WITH THE APPROPRIATE CONTRACTORS & THE ARCH. & MEP DRAWINGS.
10. PROVIDE FRAMES AT ALL ROOF DRAINS, ROOF HATCHES & OTHER ROOF OPENINGS PER TYPICAL DETAILS ON S404. COORD. EXACT NUMBER, LOCATIONS & DIMENSIONS WITH THE APPROPRIATE CONTRACTORS & THE ARCH. & MEP DWGS.
11. PROVIDE CMU REINFORCING AS NOTED ON PLANS. IF NOT SHOWN ON PLANS OR DETAILS, MINIMUM CMU WALL REINFORCING TO BE #5 VERTS. @ 48" O.C. PROVIDE OPEN-CORE BOND BEAMS AT TOPS OF WALLS, AT CHANGES IN CMU THICKNESS, AND WHERE INDICATED ON PLANS & SECTIONS (10'-0" O.C. MAX VERTICAL SPACING). PROVIDE 1/2 OF INTERRUPTED VERTICALS AT JAMBS OF OPENINGS AND PROVIDE ADDITIONAL VERT'S. AT ENDS OF WALLS.
12. ALL MASONRY BOND BEAMS, OTHER THAN BOND BEAM LINTELS OVER OPENINGS, SHALL BE "OPEN-CORE" BOND BEAMS TO ALLOW VERTICAL REINFORCING TO PASS THROUGH, UNLESS NOTED OTHERWISE.
13. REF. ARCH. DWGS. FOR MASONRY CONTROL & EXPANSION JOINT LOCATIONS.
14. ALL HORIZONTAL AND DIAGONAL BRIDGING FOR STEEL JOISTS SHALL BE DESIGNED, LOCATED & PROVIDED BY THE JOIST SUPPLIER PER SJI SPECIFICATIONS.
15. FOR ESTIMATING AND BIDDING PURPOSES ONLY, ASSUME AN ADDITIONAL 1/2" THICKNESS OF CONCRETE WILL BE NECESSARY FOR ALL ELEVATED SLABS ON METAL DECK. THE INTENT OF THIS REQUIREMENT IS TO ACCOUNT FOR ANTICIPATED DEAD LOAD DEFLECTIONS IN THE SUPPORTING STRUCTURE. THE FINISHED SLAB SHALL MEET THE FLATNESS REQUIREMENTS DEFINED IN THE SPECIFICATION.
16. PLAN LEGEND:

F.F.	DENOTES FIN. FLOOR
T/X'	DENOTES TOP OF STEEL, SLAB, ETC.
B/X'	DENOTES BOTTOM OF LINTEL, ETC.
SE	DENOTES SLAB EDGE DIMENSION MEASURED FROM BEAM OR COLUMN CENTERLINE
DE	DENOTES DECK EDGE ANGLE DIMENSION MEASURED FROM BEAM OR COLUMN CENTERLINE
(F)	DENOTES 2", 20 GA. GALVANIZED COMPOSITE DECK w/ 3½" NW CONC SLAB w/ 6x6-W2.1xW2.1 WWF, TOTAL 'f' = 5½". REF. DETAIL 1/S404.
(1)	DENOTES 1½", 20 GA. GALV. & PRIME-PAINTED WIDE RIB STEEL ROOF DECK. REF. DETAIL 2/S404.
(3)	DENOTES 3", 20 GA. GALV. & PRIME-PAINTED DEEP RIB STEEL ROOF DECK. REF. DETAIL 3/S404.
	DENOTES BEAM-TO-COLUMN MOMENT CONNECTION. REF. DETAILS ON S405.
	DENOTES BEAM-THRU-BEAM MOMENT CONNECTION. REF. DETAILS ON S404.
	DENOTES BRACED FRAME OR KICKER LOCATION
	DENOTES APPROX. LOCATION OF OPENING IN DECK/SLAB. REF. DETAILS ON S404 FOR TYPICAL OPENING FRAMES.

17. WIDE-FLANGE BEAM & GIRDER NOTATION:
BEAM REACTIONS SHOWN IN KIPS TO BE USED FOR DESIGN OF SHEAR CONNECTION BY STEEL FABRICATOR'S SSE (ALLOWABLE STRESS DESIGN / LOADS UNFACTORED).
REF. THE STEEL CONNECTION NOTES ON S001 FOR DESIGN OF CONNECTIONS AT BEAMS & GIRDERS WITH NO REACTION SHOWN. THE MIN. SHEAR CONNECTION DESIGN LOAD SHALL BE 15 KIPS.

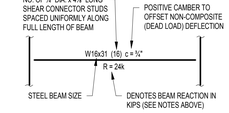

TYPICAL COMPOSITE BEAM DIAGRAM

18. T/STEEL BEAM = +15'-6½" ON THIS SHEET UNLESS NOTED OTHERWISE.

MADE @ PLAINFIELD

CSO
8831 Keystone Crossing, Indianapolis, IN 46240
317.848.7600 | csoinc.net

© 2019 CSO Architects, Inc. All Rights Reserved

Lynch, Harrison & Brumley, Inc.
550 Virginia Avenue
Indianapolis, IN 46203
P 317.423.1550
F 317.423.1551

PROJECT:
TOWN OF PLAINFIELD
MADE@ PLAINFIELD
Red Pride Drive, Plainfield, IN 46168

SCOPE DRAWINGS:
These drawings indicate the general scope of the project in terms of architectural design concept, the dimensions of the building, the major architectural elements and the type of construction and finishes to be provided.
The drawings do not necessarily indicate or describe all work required for full performance and completion of the contract(s) for the project.
On the basis of the general scope indicated or described, the trade contractors shall furnish all items required for the proper execution and completion of the work.

REVISIONS:

1	ADDENDUM 1	2020-01-30

ISSUE DATE	DRAWN BY	CHECKED BY
01/16/2020	JRV	PAB

DRAWING TITLE:
SECOND FLOOR & LOW ROOF FRAMING PLAN - AREA A

CERTIFIED BY:
MARK D. LAVELLE
PE19400114
STATE OF INDIANA
PROFESSIONAL ENGINEER

DRAWING NUMBER
S202A

PROJECT NUMBER
19004

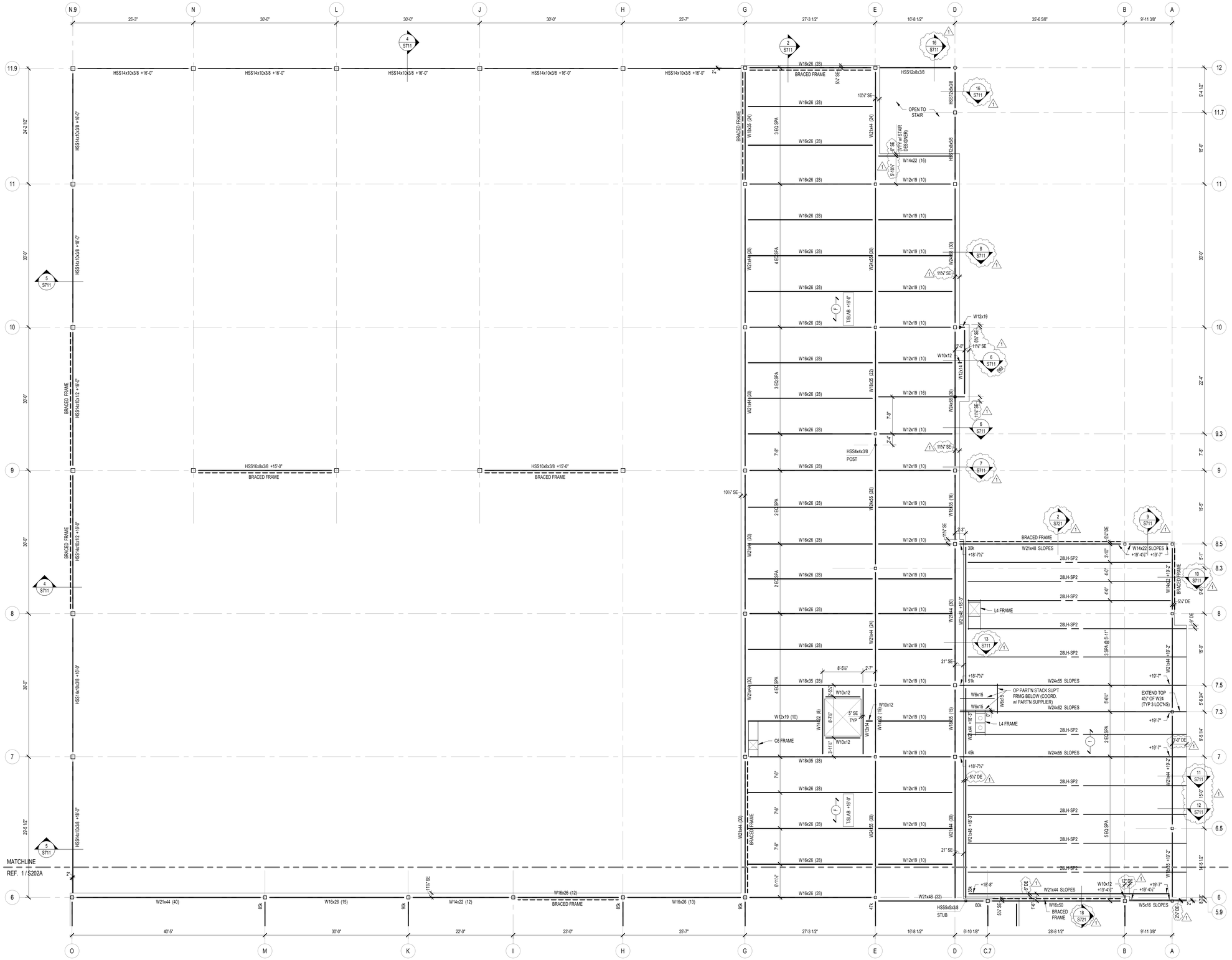

1 / S202B SECOND FLOOR & LOW ROOF FRAMING PLAN - UNIT B

SCALE: 1/8" = 1'-0"

NORTH

FRAMING PLAN NOTES

1. REF. S001 & S002 FOR STRUCTURAL NOTES, DESIGN DATA, SCHEDULES & LEGENDS.
2. REF. THE S400 SERIES FOR TYPICAL FRAMING AND MASONRY DETAILS.
3. ALL CONTRACTORS ARE REQUIRED TO COORDINATE THEIR WORK WITH ALL DISCIPLINES TO AVOID CONFLICTS. THE MECHANICAL, ELECTRICAL, AND PLUMBING ASPECTS ARE NOT IN THE SCOPE OF THESE DRAWINGS. THEREFORE, ALL REQUIRED MATERIALS AND WORK MAY NOT BE INDICATED.
4. ALL ELEVATIONS ARE REFERENCED FROM THE FIRST FLOOR FIN. FLOOR ELEVATION +0'-0". COORD. USGS ELEVATION WITH CIVIL DWGS.
5. ALL WALLS SHALL BE LAID OUT FROM THE ARCHITECTURAL DRAWINGS.
6. REF. ARCH. DRAWINGS. FOR ALL DIMENSIONS NOT SHOWN. CONTRACTOR SHALL VERIFY ALL DIMENSIONS PRIOR TO CONSTRUCTION AND IMMEDIATELY NOTIFY ARCHITECT/ENGINEER OF ANY DISCREPANCIES.
7. COORDINATE EXACT SIZE & LOCATION OF ANY MECHANICAL OPENINGS IN FLOOR SLAB, ROOF DECK, OR WALLS WITH THE MEP CONTRACTOR(S). LOCATION & SIZE OF ALL DUCT OPENINGS, GRILLES, ETC. SHALL BE VERIFIED PRIOR TO CONSTRUCTION.
8. ALL ELEVATIONS SHOWN ON PLAN INDICATE TOP OF STEEL BEAM UNLESS NOTED OTHERWISE.
9. PROVIDE CHANNEL FRAMES AT ALL SUPPORTED SLAB OPENINGS PER TYPICAL DETAIL ON S404. COORDINATE EXACT NUMBER, LOCATIONS & DIMENSIONS WITH THE APPROPRIATE CONTRACTORS & THE ARCH. & MEP DRAWINGS.
10. PROVIDE FRAMES AT ALL ROOF DRAINS, ROOF HATCHES & OTHER ROOF OPENINGS PER TYPICAL DETAILS ON S404. COORD. EXACT NUMBER, LOCATIONS & DIMENSIONS WITH THE APPROPRIATE CONTRACTORS & THE ARCH. & MEP DWGS.
11. PROVIDE CMU REINFORCING AS NOTED ON PLANS. IF NOT SHOWN ON PLANS OR DETAILS, MINIMUM CMU WALL REINFORCING TO BE #5 VERTS. @ 48" O.C. PROVIDE OPEN-CORE BOND BEAMS AT TOPS OF WALLS, AT CHANGES IN CMU THICKNESS, AND WHERE INDICATED ON PLANS & SECTIONS (10'-0" O.C. MAX VERTICAL SPACING). PROVIDE 1/2 OF INTERRUPTED VERTICALS AT JAMBS OF OPENINGS AND PROVIDE ADDITIONAL VERT'S. AT ENDS OF WALLS.
12. ALL MASONRY BOND BEAMS, OTHER THAN BOND BEAM LINTELS OVER OPENINGS, SHALL BE "OPEN-CORE" BOND BEAMS TO ALLOW VERTICAL REINFORCING TO PASS THROUGH, UNLESS NOTED OTHERWISE.
13. REF. ARCH. DWGS. FOR MASONRY CONTROL & EXPANSION JOINT LOCATIONS.
14. ALL HORIZONTAL AND DIAGONAL BRIDGING FOR STEEL JOISTS SHALL BE DESIGNED, LOCATED & PROVIDED BY THE JOIST SUPPLIER PER SJI SPECIFICATIONS.
15. FOR ESTIMATING AND BIDDING PURPOSES ONLY, ASSUME AN ADDITIONAL 1/2" THICKNESS OF CONCRETE WILL BE NECESSARY FOR ALL ELEVATED SLABS ON METAL DECK. THE INTENT OF THIS REQUIREMENT IS TO ACCOUNT FOR ANTICIPATED DEAD LOAD DEFLECTIONS IN THE SUPPORTING STRUCTURE. THE FINISHED SLAB SHALL MEET THE FLATNESS REQUIREMENTS DEFINED IN THE SPECIFICATION.
16. PLAN LEGEND:

F.F.	DENOTES FIN. FLOOR
T/X'	DENOTES TOP OF STEEL, SLAB, ETC.
B/X'	DENOTES BOTTOM OF LINTEL, ETC.
SE	DENOTES SLAB EDGE DIMENSION MEASURED FROM BEAM OR COLUMN CENTERLINE
DE	DENOTES DECK EDGE ANGLE DIMENSION MEASURED FROM BEAM OR COLUMN CENTERLINE
(F)	DENOTES 2", 20 GA. GALVANIZED COMPOSITE DECK w/ 3½" NW CONC SLAB w/ 6x6-W2.1xW2.1 WWF, TOTAL 'I' = 5½". REF. DETAIL 1/S404.
(1)	DENOTES 1½", 20 GA. GALV. & PRIME-PAINTED WIDE RIB STEEL ROOF DECK. REF. DETAIL 2/S404.
(3)	DENOTES 3", 20 GA. GALV. & PRIME-PAINTED DEEP RIB STEEL ROOF DECK. REF. DETAIL 3/S404.
	DENOTES BEAM-TO-COLUMN MOMENT CONNECTION. REF. DETAILS ON S405.
	DENOTES BEAM-THRU-BEAM MOMENT CONNECTION. REF. DETAILS ON S404.
	DENOTES BRACED FRAME OR KICKER LOCATION
	DENOTES APPROX. LOCATION OF OPENING IN DECK/SLAB. REF. DETAILS ON S404 FOR TYPICAL OPENING FRAMES.

17. WIDE-FLANGE BEAM & GIRDER NOTATION:
BEAM REACTIONS SHOWN IN KIPS TO BE USED FOR DESIGN OF SHEAR CONNECTION BY STEEL FABRICATOR'S SSE (ALLOWABLE STRESS DESIGN / LOADS UNFACTORED). REF. THE STEEL CONNECTION NOTES ON S001 FOR DESIGN OF CONNECTIONS AT BEAMS & GIRDERS WITH NO REACTION SHOWN. THE MIN. SHEAR CONNECTION DESIGN LOAD SHALL BE 15 KIPS.

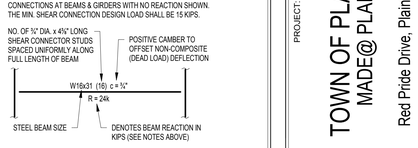

TYPICAL COMPOSITE BEAM DIAGRAM

18. T/STEEL BEAM = +15'-6½" ON THIS SHEET UNLESS NOTED OTHERWISE.

MADE @ PLAINFIELD

CSO
8831 Keystone Crossing, Indianapolis, IN 46240
317.848.7600 | csoinc.net

© 2019 CSO Architects, Inc. All Rights Reserved

Lynch, Harrison & Brumleve, Inc.
P 317.423.1550
F 317.423.1551
550 Virginia Avenue
Indianapolis, IN 46203

PROJECT:
TOWN OF PLAINFIELD
MADE@ PLAINFIELD
Red Pride Drive, Plainfield, IN 46168

SCOPE DRAWINGS:
These drawings describe the general scope of the project in terms of architectural design concept, the dimensions of the building, the major architectural elements and the type of structural, mechanical and electrical systems.
The drawings do not necessarily indicate or describe all work required to the satisfactory completion and completion of the requirements of the Contract.
On the basis of the general scope indicated or described, the trade contractors shall furnish all items required for the proper execution and completion of the work.

REVISIONS:

1	ADDENDUM 1	2020-01-30

ISSUE DATE	DRAWN BY	CHECKED BY
01/16/2020	JRV	PAB

DRAWING TITLE:
SECOND FLOOR & LOW ROOF FRAMING PLAN - AREA B

CERTIFIED BY:
MARK D. LAYER
REGISTERED
PE19400114
STATE OF INDIANA
PROFESSIONAL ENGINEER

DRAWING NUMBER
S202B

PROJECT NUMBER
19004

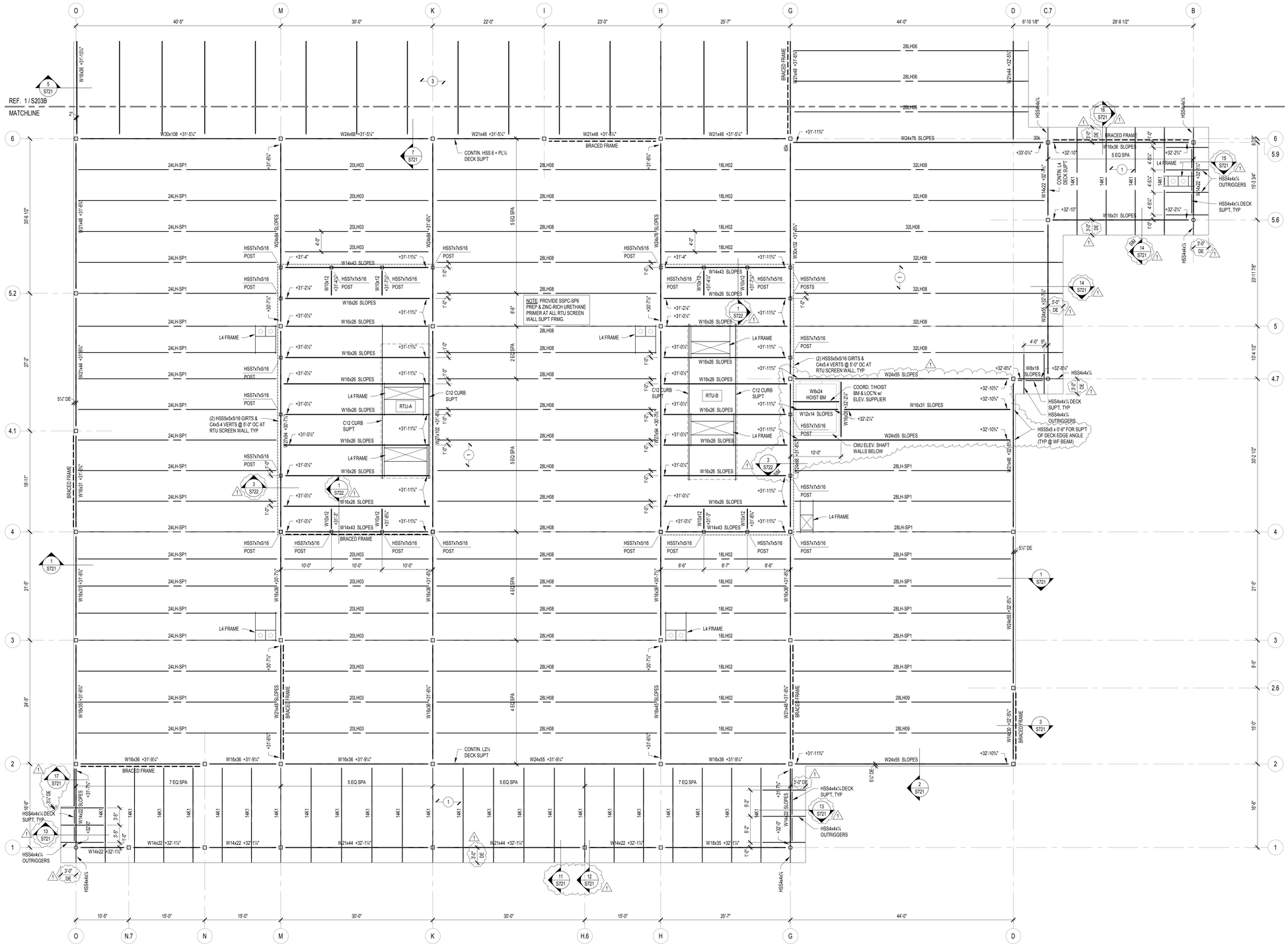

1 S203A ROOF FRAMING PLAN - AREA A
SCALE: 1/8" = 1'-0"

NORTH

FRAMING PLAN NOTES

1. REF. S001 & S002 FOR STRUCTURAL NOTES, DESIGN DATA, SCHEDULES & LEGENDS.
2. REF. THE S400 SERIES FOR TYPICAL FRAMING AND MASONRY DETAILS.
3. ALL CONTRACTORS ARE REQUIRED TO COORDINATE THEIR WORK WITH ALL DISCIPLINES TO AVOID CONFLICTS. THE MECHANICAL, ELECTRICAL, AND PLUMBING ASPECTS ARE NOT IN THE SCOPE OF THESE DRAWINGS. THEREFORE, ALL REQUIRED MATERIALS AND WORK MAY NOT BE INDICATED.
4. ALL ELEVATIONS ARE REFERENCED FROM THE FIRST FLOOR FIN. FLOOR ELEVATION +0'-0". COORD. USGS ELEVATION WITH CIVIL DWGS.
5. ALL WALLS SHALL BE LAID OUT FROM THE ARCHITECTURAL DRAWINGS.
6. REF. ARCH. DRAWINGS. FOR ALL DIMENSIONS NOT SHOWN. CONTRACTOR SHALL VERIFY ALL DIMENSIONS PRIOR TO CONSTRUCTION AND IMMEDIATELY NOTIFY ARCHITECT/ENGINEER OF ANY DISCREPANCIES.
7. COORDINATE EXACT SIZE & LOCATION OF ANY MECHANICAL OPENINGS IN FLOOR SLAB, ROOF DECK, OR WALLS WITH THE MEP CONTRACTOR(S). LOCATION & SIZE OF ALL DUCT OPENINGS, GRILLES, ETC. SHALL BE VERIFIED PRIOR TO CONSTRUCTION.
8. ALL ELEVATIONS SHOWN ON PLAN INDICATE TOP OF STEEL BEAM UNLESS NOTED OTHERWISE.
9. PROVIDE CHANNEL FRAMES AT ALL SUPPORTED SLAB OPENINGS PER TYPICAL DETAIL ON S404. COORDINATE EXACT NUMBER, LOCATIONS & DIMENSIONS WITH THE APPROPRIATE CONTRACTORS & THE ARCH. & MEP DRAWINGS.
10. PROVIDE FRAMES AT ALL ROOF DRAINS, ROOF HATCHES & OTHER ROOF OPENINGS PER TYPICAL DETAILS ON S404. COORD. EXACT NUMBER, LOCATIONS & DIMENSIONS WITH THE APPROPRIATE CONTRACTORS & THE ARCH. & MEP DWGS.
11. PROVIDE CMU REINFORCING AS NOTED ON PLANS. IF NOT SHOWN ON PLANS OR DETAILS, MINIMUM CMU WALL REINFORCING TO BE #5 VERTS @ 48" O.C. PROVIDE OPEN-CORE BOND BEAMS AT TOPS OF WALLS, AT CHANGES IN CMU THICKNESS, AND WHERE INDICATED ON PLANS & SECTIONS (10'-0" O.C. MAX VERTICAL SPACING). PROVIDE 1/2 OF INTERRUPTED VERTICALS AT JAMBS OF OPENINGS AND PROVIDE ADDITIONAL VERT'S. AT ENDS OF WALLS.
12. ALL MASONRY BOND BEAMS, OTHER THAN BOND BEAM LINTELS OVER OPENINGS, SHALL BE "OPEN-CORE" BOND BEAMS TO ALLOW VERTICAL REINFORCING TO PASS THROUGH, UNLESS NOTED OTHERWISE.
13. REF. ARCH. DWGS. FOR MASONRY CONTROL & EXPANSION JOINT LOCATIONS.
14. ALL HORIZONTAL AND DIAGONAL BRIDGING FOR STEEL JOISTS SHALL BE DESIGNED, LOCATED & PROVIDED BY THE JOIST SUPPLIER PER SJI SPECIFICATIONS.
15. FOR ESTIMATING AND BIDDING PURPOSES ONLY, ASSUME AN ADDITIONAL 1/2" THICKNESS OF CONCRETE WILL BE NECESSARY FOR ALL ELEVATED SLABS ON METAL DECK. THE INTENT OF THIS REQUIREMENT IS TO ACCOUNT FOR ANTICIPATED DEAD LOAD DEFLECTIONS IN THE SUPPORTING STRUCTURE. THE FINISHED SLAB SHALL MEET THE FLATNESS REQUIREMENTS DEFINED IN THE SPECIFICATION.
16. PLAN LEGEND:

F.F.	DENOTES FIN. FLOOR
T/X'	DENOTES TOP OF STEEL, SLAB, ETC.
B/X'	DENOTES BOTTOM OF LINTEL, ETC.
SE	DENOTES SLAB EDGE DIMENSION MEASURED FROM BEAM OR COLUMN CENTERLINE
DE	DENOTES DECK EDGE ANGLE DIMENSION MEASURED FROM BEAM OR COLUMN CENTERLINE
(F)	DENOTES 2", 20 GA. GALVANIZED COMPOSITE DECK w/ 3½" NW CONC SLAB w/ 6x6-W2.1xW2.1 WWF, TOTAL T = 5½". REF. DETAIL 1/S404.
(1)	DENOTES 1½", 20 GA. GALV. & PRIME-PAINTED WIDE RIB STEEL ROOF DECK. REF. DETAIL 2/S404.
(3)	DENOTES 3", 20 GA. GALV. & PRIME-PAINTED DEEP RIB STEEL ROOF DECK. REF. DETAIL 3/S404.
	DENOTES BEAM-TO-COLUMN MOMENT CONNECTION. REF. DETAILS ON S405.
	DENOTES BEAM-THRU-BEAM MOMENT CONNECTION. REF. DETAILS ON S404.
	DENOTES BRACED FRAME OR KICKER LOCATION
	DENOTES APPROX. LOCATION OF OPENING IN DECK/SLAB. REF. DETAILS ON S404 FOR TYPICAL OPENING FRAMES.

17. WIDE-FLANGE BEAM & GIRDER NOTATION:
BEAM REACTIONS SHOWN IN KIPS TO BE USED FOR DESIGN OF SHEAR CONNECTION BY STEEL FABRICATOR'S SSE (ALLOWABLE STRESS DESIGN / LOADS UNFACTORED).
REF. THE STEEL CONNECTION NOTES ON S001 FOR DESIGN OF CONNECTIONS AT BEAMS & GIRDERS WITH NO REACTION SHOWN. THE MIN. SHEAR CONNECTION DESIGN LOAD SHALL BE 15 KIPS.

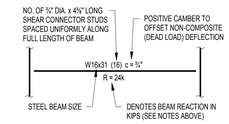

TYPICAL COMPOSITE BEAM DIAGRAM

MADE @ PLAINFIELD

CSO
8831 Keystone Crossing, Indianapolis, IN 46240
317.848.7600 | csoinc.net
© 2019-CSO Architects, Inc. All Rights Reserved

Lynch, Harrison & Brumfield, Inc.
P 317.423.1550
F 317.423.1551
550 Virginia Avenue
Indianapolis, IN 46203

PROJECT:
TOWN OF PLAINFIELD
MADE@ PLAINFIELD
Red Pride Drive, Plainfield, IN 46168

SCOPE DRAWINGS:
These drawings indicate the general scope of the project in terms of architectural design concept, the dimensions of the building, the major architectural elements and the type of construction and finishes to be provided.
The drawings do not necessarily indicate or describe all work required for full performance and completion of the contracted work in all respects.
On the basis of the general scope indicated or described, the trade contractors shall furnish all items required for the proper execution and completion of the work.

REVISIONS:

1	ADDENDUM 1	2020-01-30

ISSUE DATE	DRAWN BY	CHECKED BY
01/16/2020	JRV	PAB

DRAWING TITLE:
ROOF FRAMING PLAN - AREA A

CERTIFIED BY:
MARK D. LAVELLE
REGISTERED
PE19400114
STATE OF INDIANA
PROFESSIONAL ENGINEER

DRAWING NUMBER
S203A

PROJECT NUMBER
19004

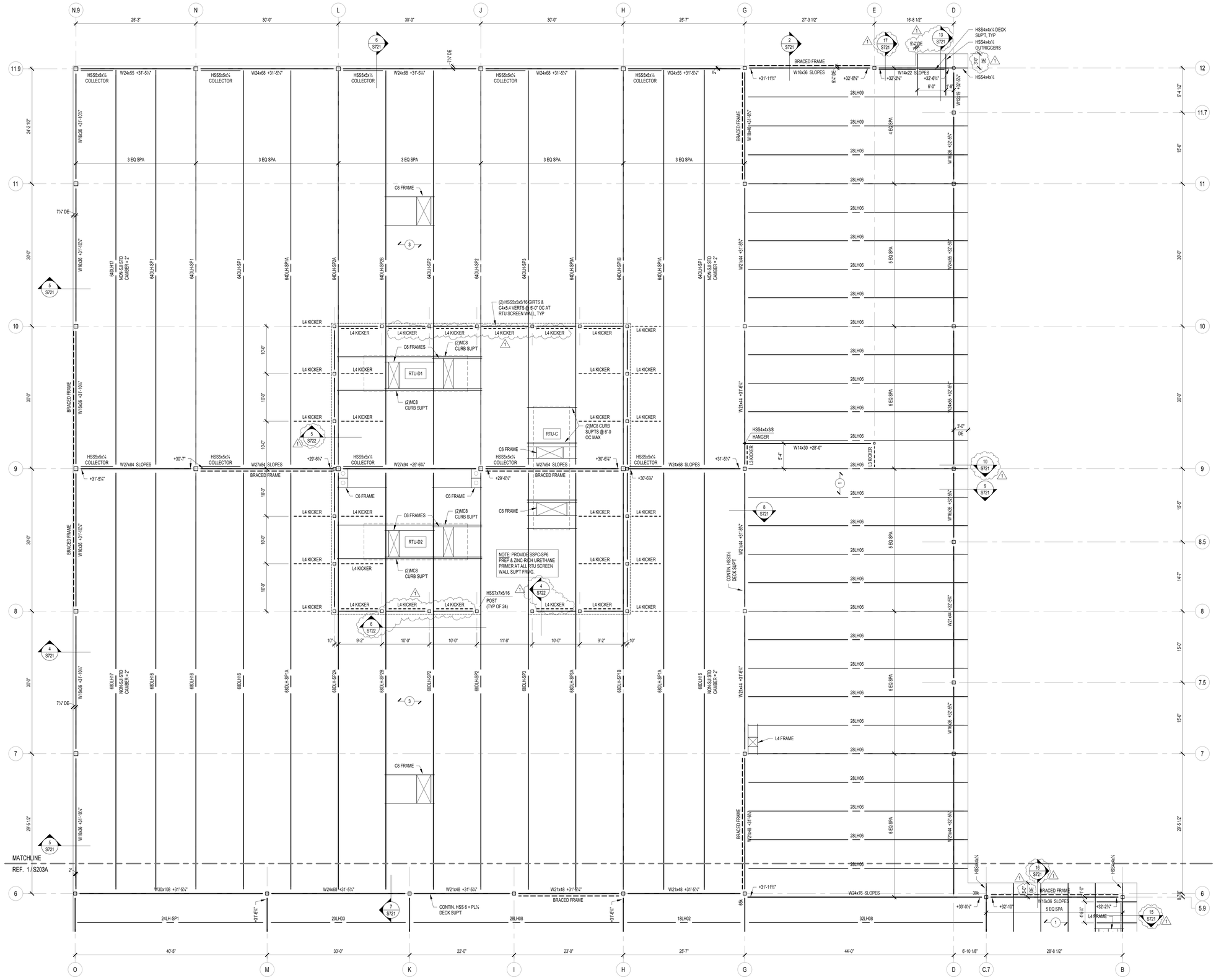

1 S203B ROOF FRAMING PLAN - AREA B
SCALE: 1/8" = 1'-0"
NORTH

FRAMING PLAN NOTES

1. REF. S001 & S002 FOR STRUCTURAL NOTES, DESIGN DATA, SCHEDULES & LEGENDS.
2. REF. THE S400 SERIES FOR TYPICAL FRAMING AND MASONRY DETAILS.
3. ALL CONTRACTORS ARE REQUIRED TO COORDINATE THEIR WORK WITH ALL DISCIPLINES TO AVOID CONFLICTS. THE MECHANICAL, ELECTRICAL, AND PLUMBING ASPECTS ARE NOT IN THE SCOPE OF THESE DRAWINGS. THEREFORE, ALL REQUIRED MATERIALS AND WORK MAY NOT BE INDICATED.
4. ALL ELEVATIONS ARE REFERENCED FROM THE FIRST FLOOR FIN. FLOOR ELEVATION +0'-0". COORD. USGS ELEVATION WITH CIVIL DWGS.
5. ALL WALLS SHALL BE LAID OUT FROM THE ARCHITECTURAL DRAWINGS.
6. REF. ARCH. DRAWINGS. FOR ALL DIMENSIONS NOT SHOWN. CONTRACTOR SHALL VERIFY ALL DIMENSIONS PRIOR TO CONSTRUCTION AND IMMEDIATELY NOTIFY ARCHITECT/ENGINEER OF ANY DISCREPANCIES.
7. COORDINATE EXACT SIZE & LOCATION OF ANY MECHANICAL OPENINGS IN FLOOR SLAB, ROOF DECK, OR WALLS WITH THE MEP CONTRACTOR(S). LOCATION & SIZE OF ALL DUCT OPENINGS, GRILLES, ETC. SHALL BE VERIFIED PRIOR TO CONSTRUCTION.
8. ALL ELEVATIONS SHOWN ON PLAN INDICATE TOP OF STEEL BEAM UNLESS NOTED OTHERWISE.
9. PROVIDE CHANNEL FRAMES AT ALL SUPPORTED SLAB OPENINGS PER TYPICAL DETAIL ON S404. COORDINATE EXACT NUMBER, LOCATIONS & DIMENSIONS WITH THE APPROPRIATE CONTRACTORS & THE ARCH. & MEP DRAWINGS.
10. PROVIDE FRAMES AT ALL ROOF DRAINS, ROOF HATCHES & OTHER ROOF OPENINGS PER TYPICAL DETAILS ON S404. COORD. EXACT NUMBER, LOCATIONS & DIMENSIONS WITH THE APPROPRIATE CONTRACTORS & THE ARCH. & MEP DWGS.
11. PROVIDE CMU REINFORCING AS NOTED ON PLANS. IF NOT SHOWN ON PLANS OR DETAILS, MINIMUM CMU WALL REINFORCING TO BE #5 VERTS. @ 48" O.C. PROVIDE OPEN-CORE BOND BEAMS AT TOPS OF WALLS, AT CHANGES IN CMU THICKNESS, AND WHERE INDICATED ON PLANS & SECTIONS (10'-0" O.C. MAX VERTICAL SPACING). PROVIDE 1/2 OF INTERRUPTED VERTICALS AT JAMBS OF OPENINGS AND PROVIDE ADDITIONAL VERTS. AT ENDS OF WALLS.
12. ALL MASONRY BOND BEAMS, OTHER THAN BOND BEAM LINTELS OVER OPENINGS, SHALL BE "OPEN-CORE" BOND BEAMS TO ALLOW VERTICAL REINFORCING TO PASS THROUGH, UNLESS NOTED OTHERWISE.
13. REF. ARCH. DWGS. FOR MASONRY CONTROL & EXPANSION JOINT LOCATIONS.
14. ALL HORIZONTAL AND DIAGONAL BRIDGING FOR STEEL JOISTS SHALL BE DESIGNED, LOCATED & PROVIDED BY THE JOIST SUPPLIER PER SJI SPECIFICATIONS.
15. FOR ESTIMATING AND BIDDING PURPOSES ONLY, ASSUME AN ADDITIONAL 1/2" THICKNESS OF CONCRETE WILL BE NECESSARY FOR ALL ELEVATED SLABS ON METAL DECK. THE INTENT OF THIS REQUIREMENT IS TO ACCOUNT FOR ANTICIPATED DEAD LOAD DEFLECTIONS IN THE SUPPORTING STRUCTURE. THE FINISHED SLAB SHALL MEET THE FLATNESS REQUIREMENTS DEFINED IN THE SPECIFICATION.
16. PLAN LEGEND:

F.F.	DENOTES FIN. FLOOR
T/X'	DENOTES TOP OF STEEL, SLAB, ETC.
B/X'	DENOTES BOTTOM OF LINTEL, ETC.
SE	DENOTES SLAB EDGE DIMENSION MEASURED FROM BEAM OR COLUMN CENTERLINE
DE	DENOTES DECK EDGE ANGLE DIMENSION MEASURED FROM BEAM OR COLUMN CENTERLINE
F	DENOTES 2", 20 GA. GALVANIZED COMPOSITE DECK w/ 3½" NW CONC SLAB w/ 6x6-W2.1xW2.1 WWF, TOTAL 'Y' = 5½". REF. DETAIL 1/S404.
1	DENOTES 1½", 20 GA. GALV. & PRIME-PAINTED WIDE RIB STEEL ROOF DECK. REF. DETAIL 2/S404.
3	DENOTES 3", 20 GA. GALV. & PRIME-PAINTED DEEP RIB STEEL ROOF DECK. REF. DETAIL 3/S404.
	DENOTES BEAM-TO-COLUMN MOMENT CONNECTION. REF. DETAILS ON S405.
	DENOTES BEAM-THRU-BEAM MOMENT CONNECTION. REF. DETAILS ON S404.
	DENOTES BRACED FRAME OR KICKER LOCATION
	DENOTES APPROX. LOCATION OF OPENING IN DECK/SLAB. REF. DETAILS ON S404 FOR TYPICAL OPENING FRAMES.

17. WIDE-FLANGE BEAM & GIRDER NOTATION:
BEAM REACTIONS SHOWN IN KIPS TO BE USED FOR DESIGN OF SHEAR CONNECTION BY STEEL FABRICATOR'S SSE (ALLOWABLE STRESS DESIGN / LOADS UNFACTORED).
REF. THE STEEL CONNECTION NOTES ON S001 FOR DESIGN OF CONNECTIONS AT BEAMS & GIRDERS WITH NO REACTION SHOWN. THE MIN. SHEAR CONNECTION DESIGN LOAD SHALL BE 15 KIPS.

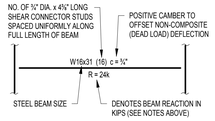

TYPICAL COMPOSITE BEAM DIAGRAM

MADE @ PLAINFIELD

CSO
8831 Keystone Crossing, Indianapolis, IN 46240
317.848.7600 | csoinc.net
© 2019 CSO Architects, Inc. All Rights Reserved

Lynch, Harrison & Brumley, Inc.
P 317.423.1550
F 317.423.1551
550 Virginia Avenue
Indianapolis, IN 46203

PROJECT:
TOWN OF PLAINFIELD
MADE@ PLAINFIELD
Red Pride Drive, Plainfield, IN 46168

SCOPE DRAWINGS:
These drawings indicate the general scope of the project in terms of architectural design concept, the dimensions of the building, the general construction required and the type of structural, mechanical and electrical systems.
The drawings do not necessarily indicate or describe all work required for full performance and completion of the requirements of the Contract.
In addition to the general scope indicated or described, the trade contractors shall furnish all items required for the proper execution and completion of the work.

REVISIONS:

1	ADDENDUM 1	2020-01-30

ISSUE DATE	DRAWN BY	CHECKED BY
01/16/2020	JRV	PAB

DRAWING TITLE:
ROOF FRAMING PLAN - AREA B

CERTIFIED BY:
MARK D. LAVEN REGISTERED PE19400114 STATE OF INDIANA PROFESSIONAL ENGINEER

DRAWING NUMBER
S203B

PROJECT NUMBER
19004

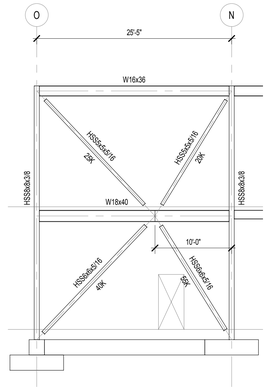

1 S301 BRACING ELEVATION - GRID 2
SCALE: 1/8" = 1'-0"

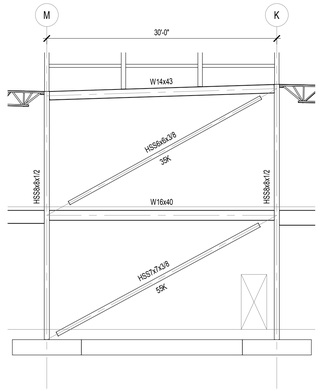

2 S301 BRACING ELEVATION - GRID 4
SCALE: 1/8" = 1'-0"

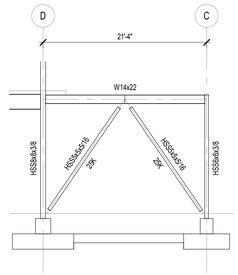

3 S301 BRACING ELEVATION - GRID 4
SCALE: 1/8" = 1'-0"

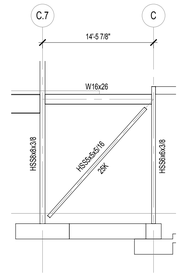

4 S301 BRACING ELEVATION - GRID 5.6
SCALE: 1/8" = 1'-0"

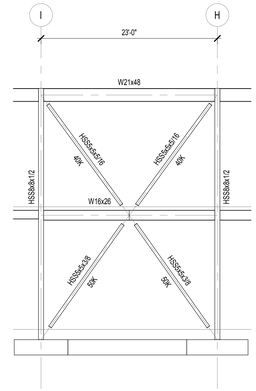

5 S301 BRACING ELEVATION - GRID 6
SCALE: 1/8" = 1'-0"

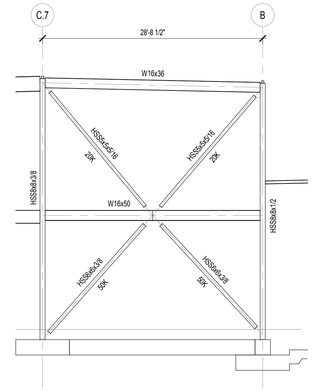

6 S301 BRACING ELEVATION - GRID 5.9
SCALE: 1/8" = 1'-0"

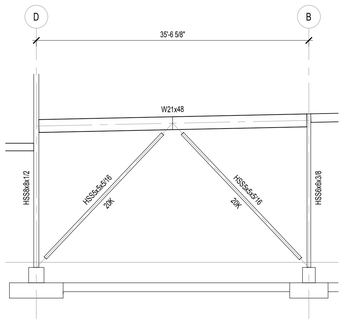

7 S301 BRACING ELEVATION - GRID 8.5
SCALE: 1/8" = 1'-0"

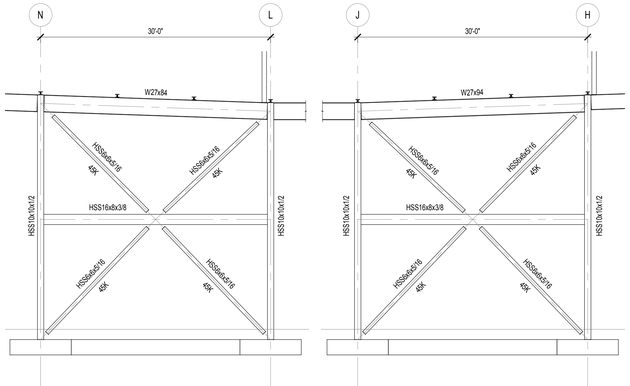

8 S301 BRACING ELEVATION - GRID 9
SCALE: 1/8" = 1'-0"

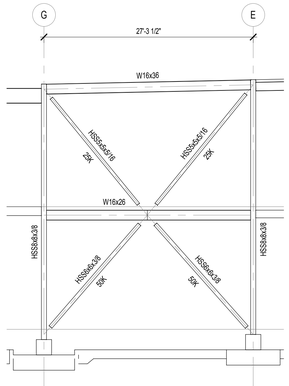

9 S301 BRACING ELEVATION - GRID 12
SCALE: 1/8" = 1'-0"

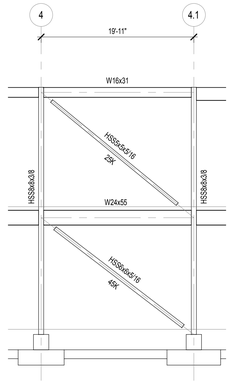

10 S301 BRACING ELEVATION - GRID O
SCALE: 1/8" = 1'-0"

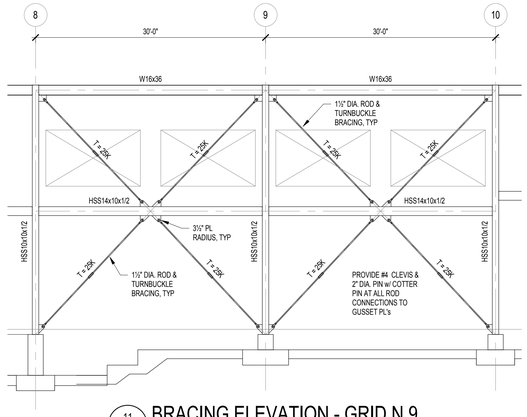

11 S301 BRACING ELEVATION - GRID N.9
SCALE: 1/8" = 1'-0"

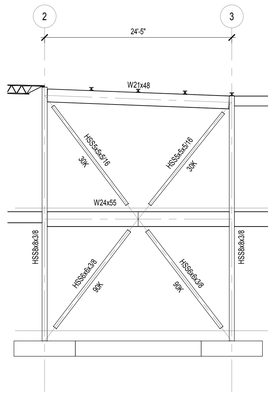

12 S301 BRACING ELEVATION - GRID M
SCALE: 1/8" = 1'-0"

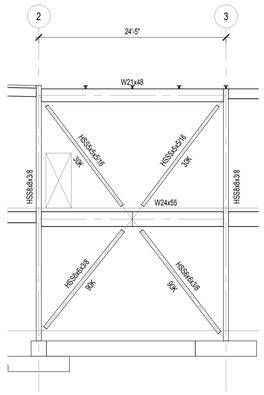

13 S301 BRACING ELEVATION - GRID G
SCALE: 1/8" = 1'-0"

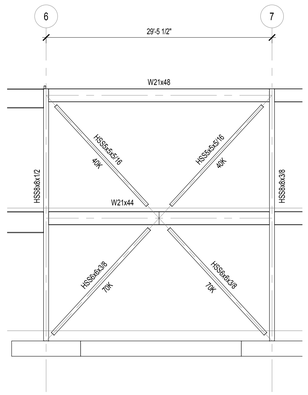

14 S301 BRACING ELEVATION - GRID G
SCALE: 1/8" = 1'-0"

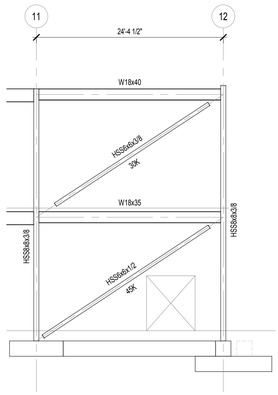

15 S301 BRACING ELEVATION - GRID G
SCALE: 1/8" = 1'-0"

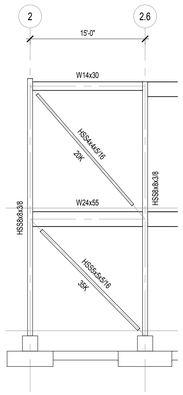

16 S301 BRACING ELEV. - GRID D
SCALE: 1/8" = 1'-0"

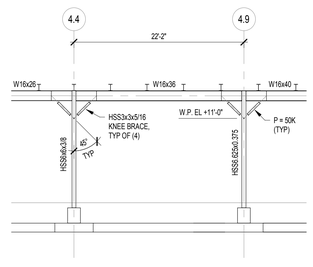

17 S301 BRACING ELEVATION - GRID C
SCALE: 1/8" = 1'-0"

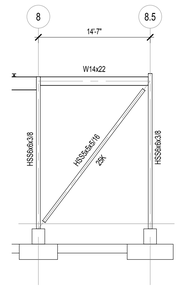

18 S301 BRACING ELEV. - GRID A
SCALE: 1/8" = 1'-0"

BRACING NOTES

1. ALL BRACING MEMBER WORKING POINTS SHALL BE LOCATED AT THE INTERSECTIONS OF MEMBER NEUTRAL AXES AND/OR AT BEAM MID-SPAN, UNLESS NOTED OTHERWISE.
2. ALL GUSSET PLATE CONNECTION MATERIAL SHALL BE ASTM A36 STEEL WITH A MINIMUM THICKNESS OF 1/2".
3. PROVIDE (1) ERECTION BOLT AT EACH END OF BRACING MEMBERS AND WELD AFTER ERECTION.
4. DESIGN ALL BRACING CONNECTIONS TO RESIST THE AXIAL BRACE FORCES SHOWN ON THE ELEVATIONS. FORCES NOTED REPRESENT MAXIMUM ASD LOAD COMBINATIONS PER AISC 360-10 AND THE 2012 INTERNATIONAL BUILDING CODE.
5. PROVIDE FULL-DEPTH WEB STIFFENER PLATES (MIN. 3/8" THICKNESS) ON EACH SIDE OF BEAM WEBS, TYPICAL WHERE BRACING MEMBER CENTERLINE INTERSECTS BEAM NEUTRAL AXIS AWAY FROM COLUMN CENTERLINE.
6. BOLTED BEAM-TO-COLUMN CONNECTIONS AT ALL BRACED FRAMES SHALL BE PRETENSIONED JOINTS USING TENSION-CONTROL BOLTS.
7. REFERENCE FRAMING PLANS FOR ANY BEAM OR COLUMN SIZES, GRID DIMENSIONS, OR TOP OF STEEL ELEVATIONS NOT SHOWN. IF DISCREPANCIES OCCUR BETWEEN THE PLANS AND ELEVATIONS, THE PLANS SHALL GOVERN.
8. REFERENCE FOUNDATION PLAN FOR FOUNDATION INFORMATION.
9. HOLD BOTTOM END OF SECOND-FLOOR BRACES 2" ABOVE T/SLAB ELEVATION.

MADE @ PLAINFIELD

CSO
8831 Keystone Crossing, Indianapolis, IN 46240
317.848.7600 | csoinc.net
© 2019 CSO Architects, Inc. All Rights Reserved

Lynch, Harrison & Brumleve, Inc.
P 317.423.1550
F 317.423.1551
550 Virginia Avenue
Indianapolis, IN 46203

PROJECT:
TOWN OF PLAINFIELD
MADE@ PLAINFIELD
Red Pride Drive, Plainfield, IN 46168

SCOPE DRAWINGS:
These drawings indicate the general scope of the project in terms of architectural design concept, the dimensions of the building, the major architectural elements and the type of construction required for the building shell.
The drawings do not necessarily indicate or describe all work required for full performance and completion of the construction of the building.
On the basis of the general scope indicated or described, the trade contractors shall furnish all items required for the proper execution and completion of the work.

REVISIONS:

ISSUE DATE	DRAWN BY	CHECKED BY
01/16/2020	JRV	PAB

DRAWING TITLE:
BRACING ELEVATIONS

CERTIFIED BY:
MARK D. LAVELLE
REGISTERED
PE19400114
STATE OF INDIANA
PROFESSIONAL ENGINEER

DRAWING NUMBER
S301

PROJECT NUMBER
19004

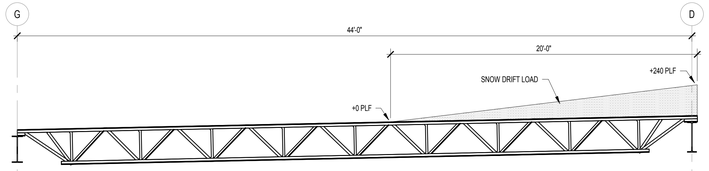

DESIGN CRITERIA

1. UNIFORM TOP CHORD LOADS:
   TL = 350 PLF
   SL = 160 PLF
2. SNOW DRIFT LOAD: SEE LOADING DIAGRAM ABOVE
3. NET WIND UPLIFT:
   20 PSF (WITHIN 14' OF ROOF PERIM.)
   15 PSF (BALANCE OF ROOF AREA)
4. DEFLECTION LIMITS (UNLESS NOTED OTHERWISE ON PLAN):
   MAX. TL DEFLECTION = L/240
   MAX. SLLL DEFLECTION = L/360
5. CAMBER: SJI STANDARD UNLESS NOTED OTHERWISE ON PLAN

1 / S302 JOIST 28LH-SP1 ELEVATION & DESIGN DATA

SCALE: 1/4" = 1'-0"

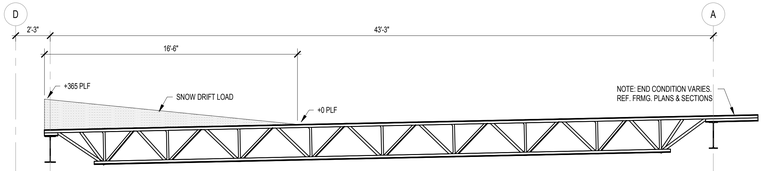

DESIGN CRITERIA

1. UNIFORM TOP CHORD LOADS:
   TL = 340 PLF
   SL = 150 PLF
2. SNOW DRIFT LOAD: SEE LOADING DIAGRAM ABOVE
3. NET WIND UPLIFT:
   20 PSF (WITHIN 14' OF ROOF PERIM.)
   15 PSF (BALANCE OF ROOF AREA)
4. DEFLECTION LIMITS (UNLESS NOTED OTHERWISE ON PLAN):
   MAX. TL DEFLECTION = L/240
   MAX. SLLL DEFLECTION = L/360
5. CAMBER: SJI STANDARD UNLESS NOTED OTHERWISE ON PLAN

2 / S302 JOIST 28LH-SP2 ELEVATION & DESIGN DATA

SCALE: 1/4" = 1'-0"

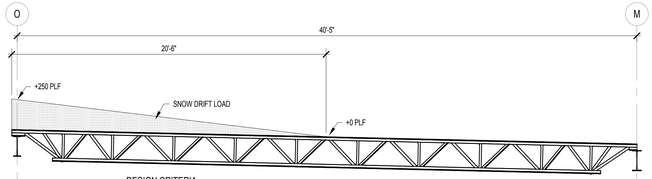

DESIGN CRITERIA

1. UNIFORM TOP CHORD LOADS:
   TL = 335 PLF
   SL = 140 PLF
2. SNOW DRIFT LOAD: SEE LOADING DIAGRAM ABOVE
3. NET WIND UPLIFT:
   20 PSF (WITHIN 14' OF ROOF PERIM.)
   15 PSF (BALANCE OF ROOF AREA)
4. DEFLECTION LIMITS (UNLESS NOTED OTHERWISE ON PLAN):
   MAX. TL DEFLECTION = L/240
   MAX. SLLL DEFLECTION = L/360
5. CAMBER: SJI STANDARD UNLESS NOTED OTHERWISE ON PLAN

3 / S302 JOIST 24LH-SP1 ELEVATION & DESIGN DATA

SCALE: 1/4" = 1'-0"

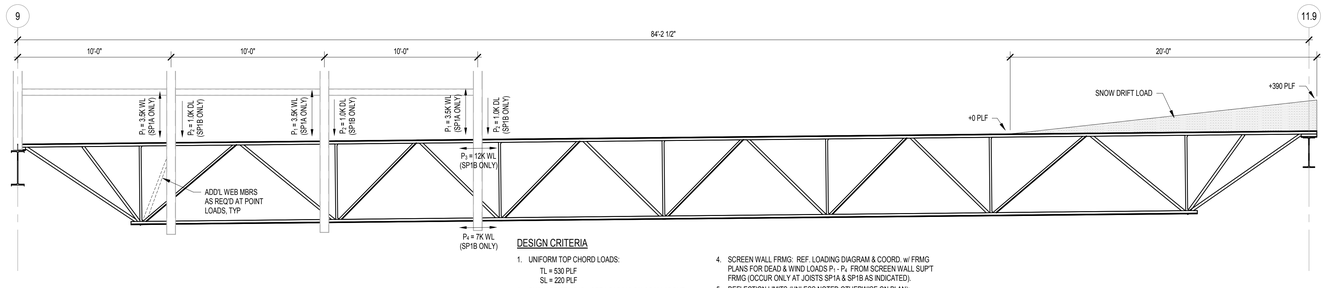

DESIGN CRITERIA

1. UNIFORM TOP CHORD LOADS:
   TL = 530 PLF
   SL = 220 PLF
2. SNOW DRIFT LOAD: SEE LOADING DIAGRAM ABOVE
3. NET WIND UPLIFT: 15 PSF
4. SCREEN WALL FRMG: REF. LOADING DIAGRAM & COORD. w/ FRMG PLANS FOR DEAD & WIND LOADS P_1 - P_2 FROM SCREEN WALL SUP'T FRMG (OCCUR ONLY AT JOISTS SP1A & SP1B AS INDICATED).
5. DEFLECTION LIMITS (UNLESS NOTED OTHERWISE ON PLAN):
   MAX. TL DEFLECTION = L/240
   MAX. SLLL DEFLECTION = L/360
6. CAMBER: SJI STANDARD UNLESS NOTED OTHERWISE ON PLAN

4 / S302 JOIST 64DLH-SP1 ELEVATION & DESIGN DATA

SCALE: 1/4" = 1'-0"

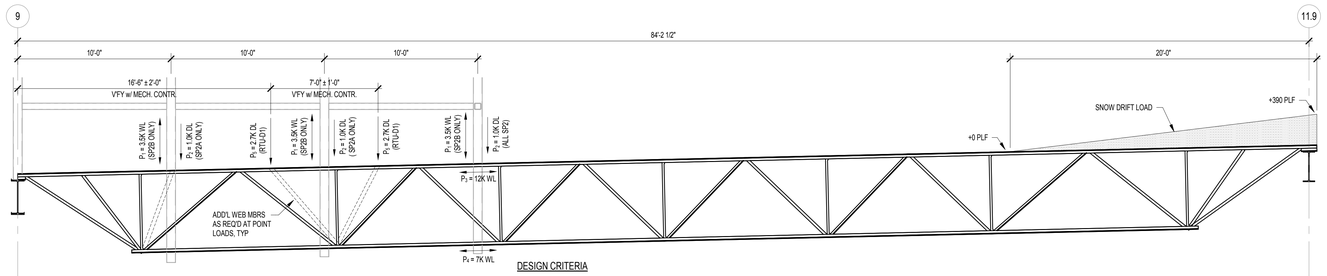

DESIGN CRITERIA

1. UNIFORM TOP CHORD LOADS:
   TL = 530 PLF
   SL = 220 PLF
2. SNOW DRIFT LOAD: SEE LOADING DIAGRAM ABOVE
3. NET WIND UPLIFT: 15 PSF
4. ROOFTOP EQPT. LOADS: SEE LOADING DIAGRAM ABOVE. LOC'NS MUST BE VERIFIED w/ MECH. CONTRACTOR(S).
5. SCREEN WALL FRMG: REF. LOADING DIAGRAM & COORD. w/ FRMG PLANS FOR DEAD & WIND LOADS P_1 - P_2 FROM SCREEN WALL SUP'T FRMG. NOTE ADDITIONAL P_1 & P_2 LOCATIONS AT JOISTS SP2A & SP2B AS INDICATED.
6. DEFLECTION LIMITS (UNLESS NOTED OTHERWISE ON PLAN):
   MAX. TL DEFLECTION = L/240
   MAX. SLLL DEFLECTION = L/360
7. CAMBER: SJI STANDARD UNLESS NOTED OTHERWISE ON PLAN

5 / S302 JOIST 64DLH-SP2 ELEVATION & DESIGN DATA

SCALE: 1/4" = 1'-0"

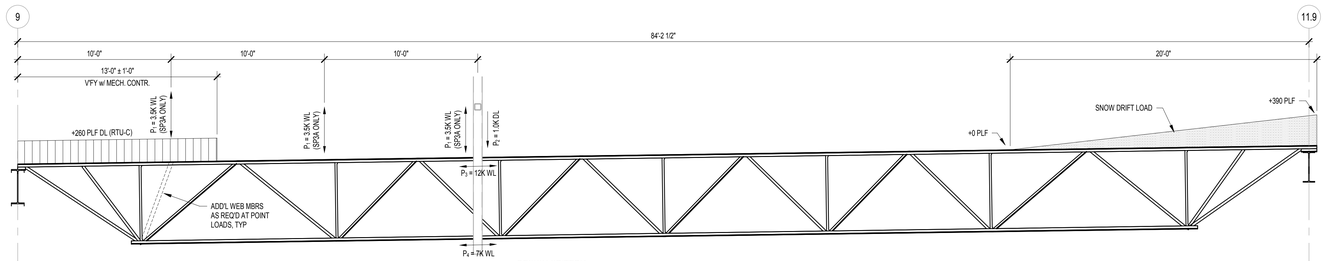

DESIGN CRITERIA

1. UNIFORM TOP CHORD LOADS:
   TL = 530 PLF
   SL = 220 PLF
2. SNOW DRIFT LOAD: SEE LOADING DIAGRAM ABOVE
3. NET WIND UPLIFT: 15 PSF
4. ROOFTOP EQPT. LOADS: SEE LOADING DIAGRAM ABOVE. LOC'NS MUST BE VERIFIED w/ MECH. CONTRACTOR(S).
5. SCREEN WALL FRMG: REF. LOADING DIAGRAM & COORD. w/ FRMG PLANS FOR DEAD & WIND LOADS P_1 - P_2 FROM SCREEN WALL SUP'T FRMG. NOTE ADDITIONAL P_1 LOCATIONS AT JOIST SP3A AS INDICATED.
6. DEFLECTION LIMITS (UNLESS NOTED OTHERWISE ON PLAN):
   MAX. TL DEFLECTION = L/240
   MAX. SLLL DEFLECTION = L/360
7. CAMBER: SJI STANDARD UNLESS NOTED OTHERWISE ON PLAN

6 / S302 JOIST 64DLH-SP3 ELEVATION & DESIGN DATA

SCALE: 1/4" = 1'-0"

CSO
8831 Keystone Crossing, Indianapolis, IN 46240
317.848.7600 | csoinc.net

© 2019 CSO Architects, Inc. All Rights Reserved

Lynch, Harrison & Brumleve, Inc.
P 317.423.1550
F 317.423.1551
550 Virginia Avenue
Indianapolis, IN 46203

PROJECT:
TOWN OF PLAINFIELD
MADE@ PLAINFIELD
Red Pride Drive, Plainfield, IN 46168

SCOPE DRAWINGS:
These drawings indicate the general scope of the project in terms of architectural design concept, the dimensions of the building, the major architectural elements and the type of construction required for the building shell.
The drawings do not necessarily indicate or describe all work required for full performance and completion of the construction of the building.
On the basis of the general scope indicated or described, the trade contractors shall furnish all items required for the proper execution and completion of the work.

REVISIONS:

ISSUE DATE	DRAWN BY	CHECKED BY
01/16/2020	JRV	PAB

DRAWING TITLE:
SPECIAL JOIST ELEVATIONS

CERTIFIED BY:
MARK D. LAWLER
REGISTERED
PE19400114
STATE OF INDIANA
PROFESSIONAL ENGINEER

DRAWING NUMBER
S302

PROJECT NUMBER
19004

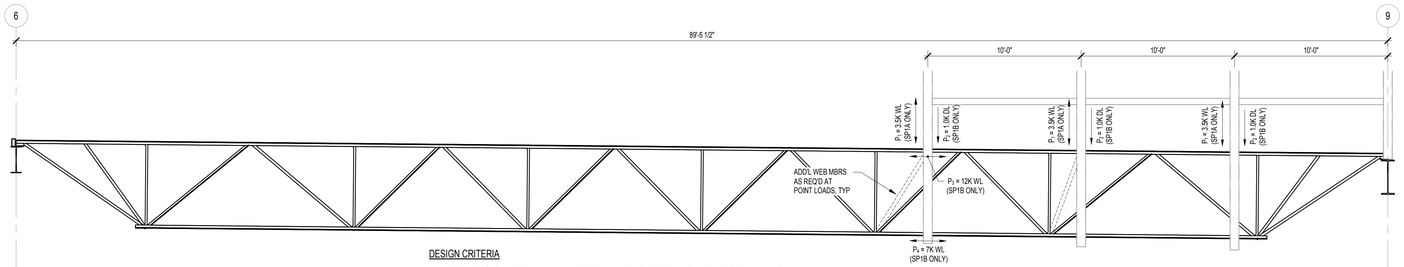

DESIGN CRITERIA

1. UNIFORM TOP CHORD LOADS:
   TL = 530 PLF
   SL = 220 PLF
2. SNOW DRIFT LOAD: NONE
3. NET WIND UPLIFT: 15 PSF
4. SCREEN WALL FRMG: REF. LOADING DIAGRAM & COORD. w/ FRMG PLANS FOR DEAD & WIND LOADS P_1 - P_4 FROM SCREEN WALL SUPT FRMG (OCCUR AT JOISTS SP1A & SP1B AS INDICATED).
5. DEFLECTION LIMITS (UNLESS NOTED OTHERWISE ON PLAN):
   MAX. TL DEFLECTION = L/240
   MAX. SL/LL DEFLECTION = L/360
6. CAMBER: SJI STANDARD UNLESS NOTED OTHERWISE ON PLAN

1 S303 JOIST 68DLH-SP1 ELEVATION & DESIGN DATA

SCALE: 1/4" = 1'-0"

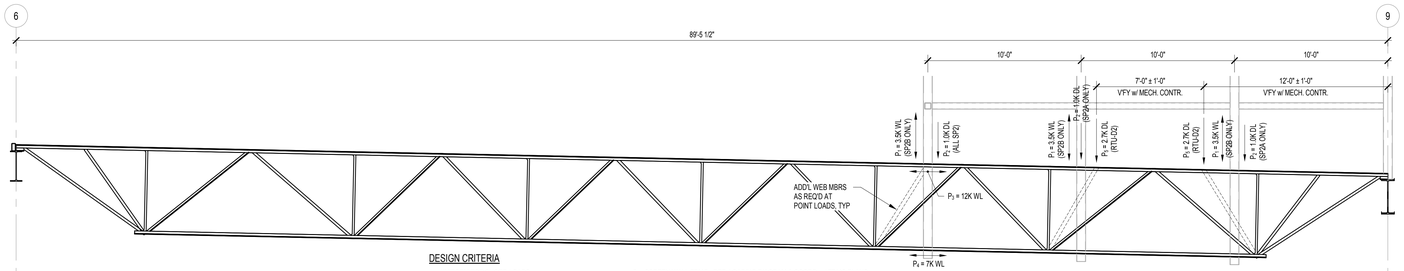

DESIGN CRITERIA

1. UNIFORM TOP CHORD LOADS:
   TL = 530 PLF
   SL = 220 PLF
2. SNOW DRIFT LOAD: NONE
3. NET WIND UPLIFT: 15 PSF
4. ROOFTOP EQPT. LOADS: SEE LOADING DIAGRAM ABOVE. LOC'NS MUST BE VERIFIED w/ MECH. CONTRACTOR(S).
5. SCREEN WALL FRMG: REF. LOADING DIAGRAM & COORD. w/ FRMG PLANS FOR DEAD & WIND LOADS P_1 - P_4 FROM SCREEN WALL SUPT FRMG. NOTE ADDITIONAL P_1 & P_2 LOCATIONS AT JOISTS SP2A & SP2B AS INDICATED.
6. DEFLECTION LIMITS (UNLESS NOTED OTHERWISE ON PLAN):
   MAX. TL DEFLECTION = L/240
   MAX. SL/LL DEFLECTION = L/360
7. CAMBER: SJI STANDARD UNLESS NOTED OTHERWISE ON PLAN

2 S303 JOIST 68DLH-SP2 ELEVATION & DESIGN DATA

SCALE: 1/4" = 1'-0"

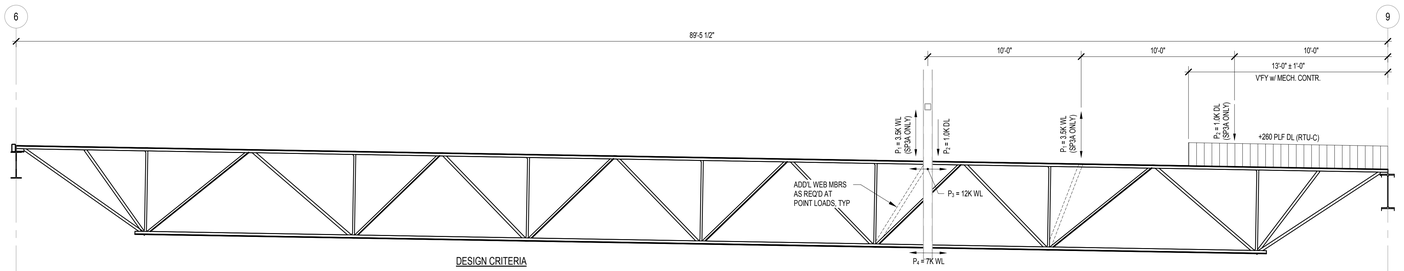

DESIGN CRITERIA

1. UNIFORM TOP CHORD LOADS:
   TL = 530 PLF
   SL = 220 PLF
2. SNOW DRIFT LOAD: NONE
3. NET WIND UPLIFT: 15 PSF
4. ROOFTOP EQPT. LOADS: SEE LOADING DIAGRAM ABOVE. LOC'NS MUST BE VERIFIED w/ MECH. CONTRACTOR(S).
5. SCREEN WALL FRMG: REF. LOADING DIAGRAM & COORD. w/ FRMG PLANS FOR DEAD & WIND LOADS P_1 - P_4 FROM SCREEN WALL SUPT FRMG. NOTE ADDITIONAL P_1 LOCATIONS AT JOIST SP3A AS INDICATED.
6. DEFLECTION LIMITS (UNLESS NOTED OTHERWISE ON PLAN):
   MAX. TL DEFLECTION = L/240
   MAX. SL/LL DEFLECTION = L/360
7. CAMBER: SJI STANDARD UNLESS NOTED OTHERWISE ON PLAN

3 S303 JOIST 68DLH-SP3 ELEVATION & DESIGN DATA

SCALE: 1/4" = 1'-0"

MADE @ PLAINFIELD

CSO
8831 Keystone Crossing, Indianapolis, IN 46240
317.848.7600 | csoinc.net
© 2019 CSO Architects, Inc. All Rights Reserved

Lynch, Harrison & Brumleve, Inc.
P 317.423.1550
F 317.423.1551
550 Virginia Avenue
Indianapolis, IN 46203

PROJECT:
TOWN OF PLAINFIELD
MADE@ PLAINFIELD
Red Pride Drive, Plainfield, IN 46168

SCOPE DRAWINGS:
These drawings indicate the general scope of the project in terms of architectural design concept, the dimensions of the building, the major architectural elements and the type of construction required for the building shell.
The drawings do not necessarily indicate or describe all work required for full performance and completion of the construction of the building.
On the basis of the general scope indicated or described, the trade contractors shall furnish all items required for the proper execution and completion of the work.

REVISIONS:

ISSUE DATE	DRAWN BY	CHECKED BY
01/16/2020	JRV	PAB

DRAWING TITLE:
SPECIAL JOIST ELEVATIONS

CERTIFIED BY:
MARK D. LAVELLE
REGISTERED
PE19400114
STATE OF INDIANA
PROFESSIONAL ENGINEER

DRAWING NUMBER
S303

PROJECT NUMBER
19004

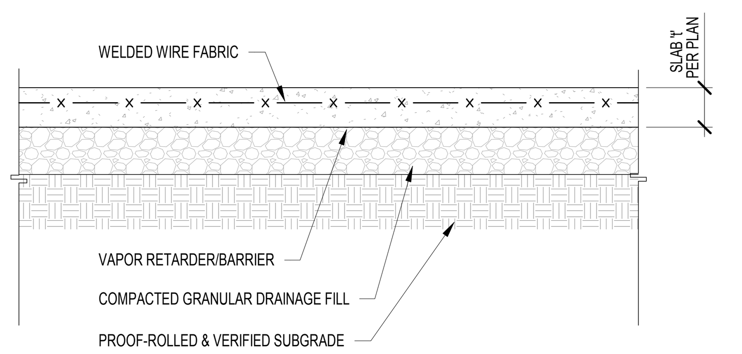

1. LOCATE WELDED WIRE FABRIC IN UPPER THIRD OF SLAB. SUPPORT ON BOLSTERS, CHAIRS, OR CONCRETE BRICKS.
2. LAP WELDED WIRE FABRIC A MIN. OF ONE FULL MESH SPACING.
3. THE USE OF POLYPROPYLENE FIBER IN LIEU OF WELDED WIRE FABRIC AS A SECONDARY REINFORCEMENT IS PERMISSIBLE, UNLESS OTHERWISE NOTED. NOTE: FIBER MAY NOT BE SUBSTITUTED FOR W.W.F. IN SUPPORTED SLABS.
4. SEE PLAN, NOTES, AND SPECIFICATIONS FOR ADDITIONAL REQUIREMENTS SUCH AS FINISH, JOINTING, CURING, ETC.

1/S401 SLAB ON GRADE CONSTRUCTION
SCALE: NONE

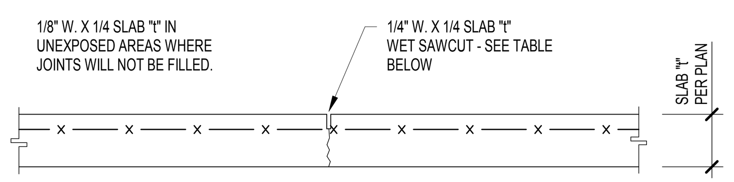

CONTROL JOINTS SHALL BE SAWN NOT LATER THAN THE FOLLOWING TABLE, OR 16 HOURS AFTER FINAL TROWELING (WHICHEVER IS LESS), WHERE TEMP. EQUALS THE AMBIENT TEMPERATURE IN DEGREES FAHRENHEIT AT THE TIME OF FINAL TROWELING. SAWCUTTING SHALL BE SUSPENDED ONLY IF THE LARGE AGGREGATE IS DISLODGED OR LOOSENED. ALTERNATE: USE PRE-FORMED JOINT FORMER.

TEMP, °F	TIME, HOURS
<40°	16
50°	14
60°	8 1/2
70°	5 1/2
80°	4
90°	3

2/S401 SLAB CONTROL/CONTRACTION JOINT
SCALE: NONE

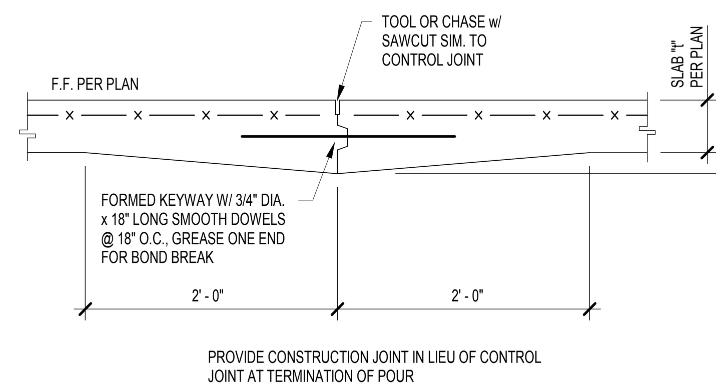

PROVIDE CONSTRUCTION JOINT IN LIEU OF CONTROL JOINT AT TERMINATION OF POUR

3/S401 SLAB CONSTRUCTION JOINT
SCALE: NONE

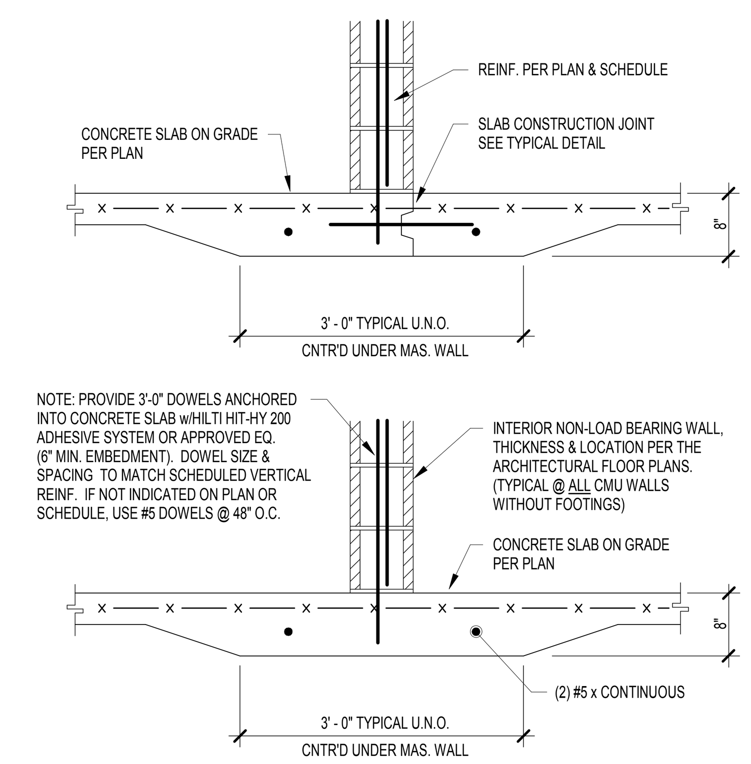

4/S401 THICKENED SLAB DETAILS
SCALE: NONE

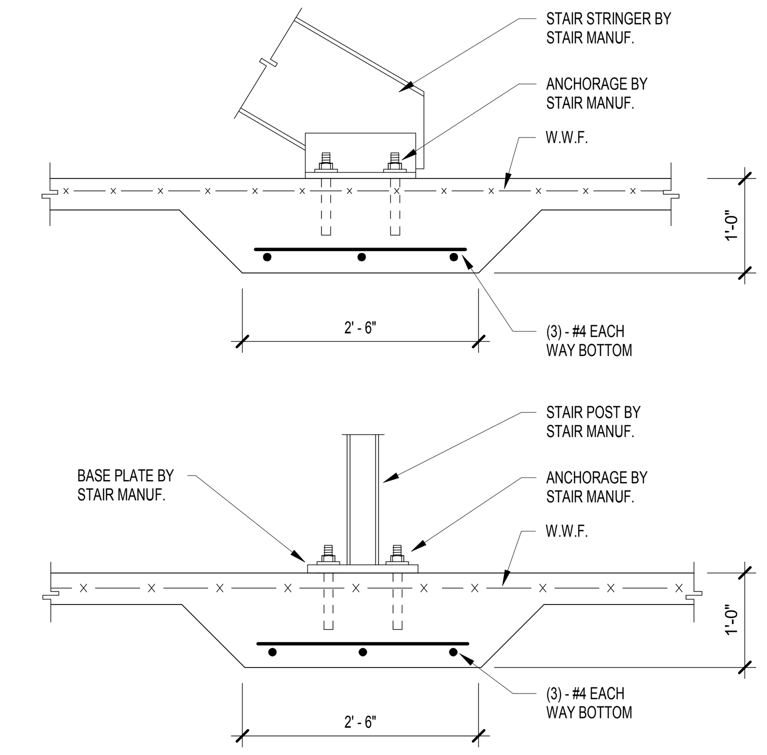

5/S401 THICKENED SLAB AT STAIR POSTS
SCALE: NONE

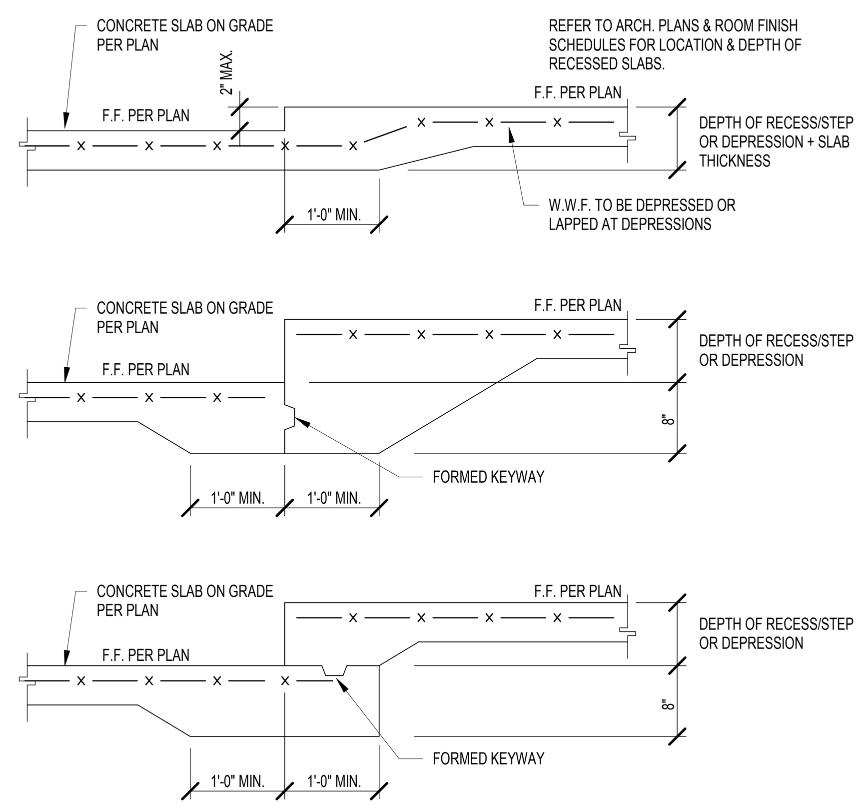

6/S401 RECESSED SLAB DETAIL
SCALE: NONE

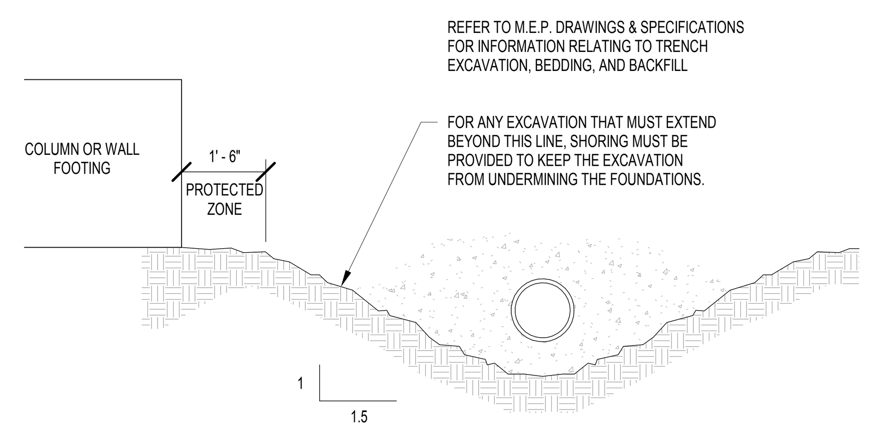

NOTE: ANY SHORING SCHEME REQUIRED MUST BE SUBMITTED TO THE ENGINEER FOR REVIEW PRIOR TO EXCAVATION.

7/S401 EXCAVATION LIMITS DETAIL
SCALE: NONE

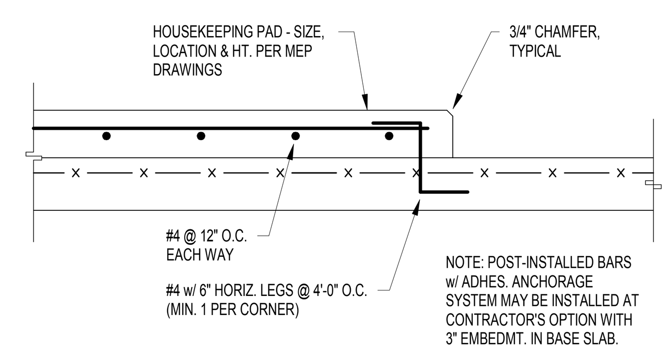

8/S401 MECHANICAL EQUIPMENT PAD DETAIL
SCALE: NONE

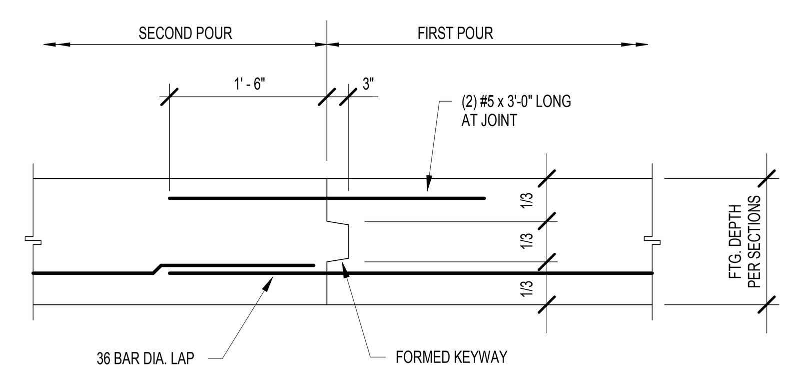

9/S401 WALL FOOTING CONSTRUCTION JOINT
SCALE: NONE

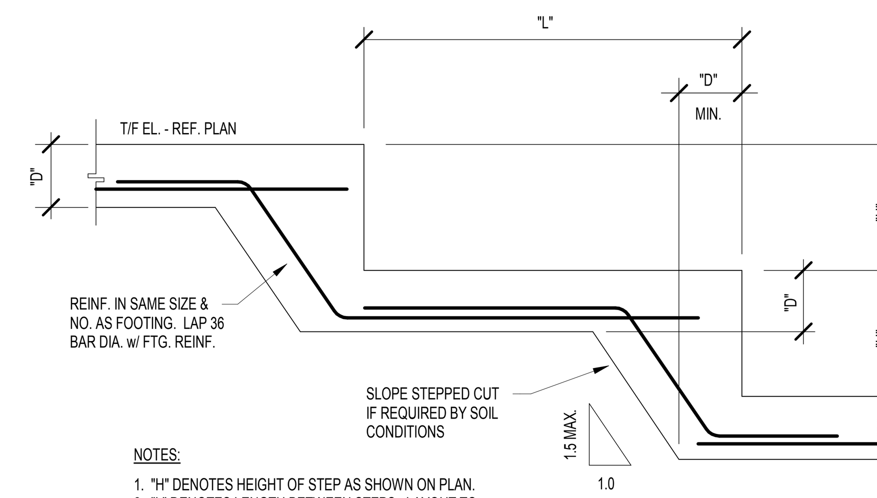

NOTES:
1. "H" DENOTES HEIGHT OF STEP AS SHOWN ON PLAN.
2. "L" DENOTES LENGTH BETWEEN STEPS. LAYOUT TO MAINTAIN SLOPE OF 1 VERTICAL TO 2 HORIZONTAL UNLESS NOTED OTHERWISE.
3. "D" DENOTES FOOTING DEPTH, REFER TO PLANS, SECTIONS & SCHEDULES.

10/S401 STEPPED WALL FOOTING DETAIL
SCALE: NONE

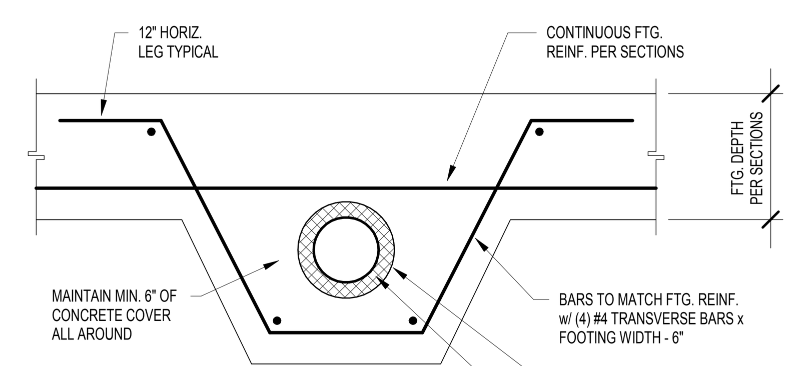

NOTES:
1. REFER TO PLUMBING DRAWINGS FOR INVERT ELEVATION OF ALL UNDERGROUND PIPING.
2. PROVIDE THIS DETAIL WHERE A PENETRATION THROUGH A WALL FOOTING IS UNAVOIDABLE.
3. NO SLEEVES IN COLUMN FOOTINGS ARE PERMITTED WITHOUT PRIOR WRITTEN APPROVAL OF THE ARCHITECT/ENGINEER.

11/S401 WALL FOOTING SLEEVE DETAIL
SCALE: NONE

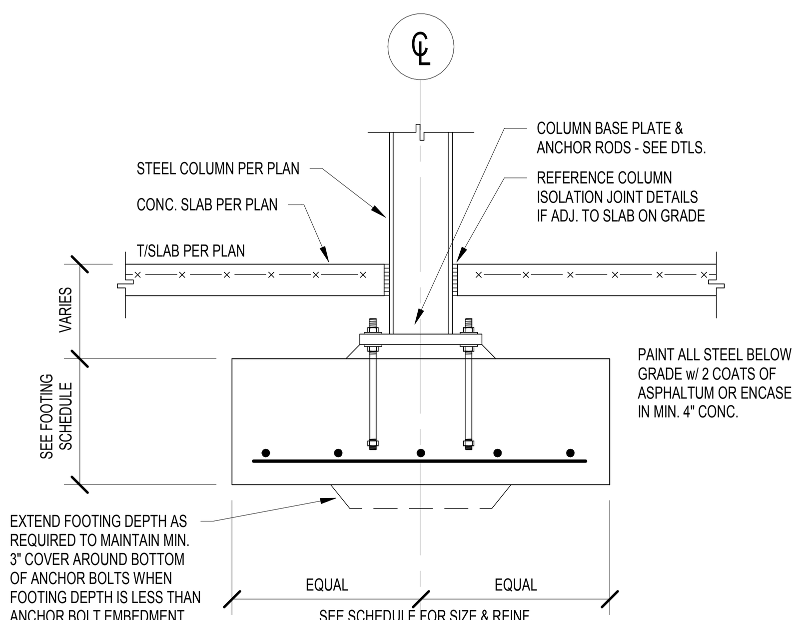

12/S401 TYPICAL INTERIOR COLUMN FOOTING DETAIL
SCALE: NONE

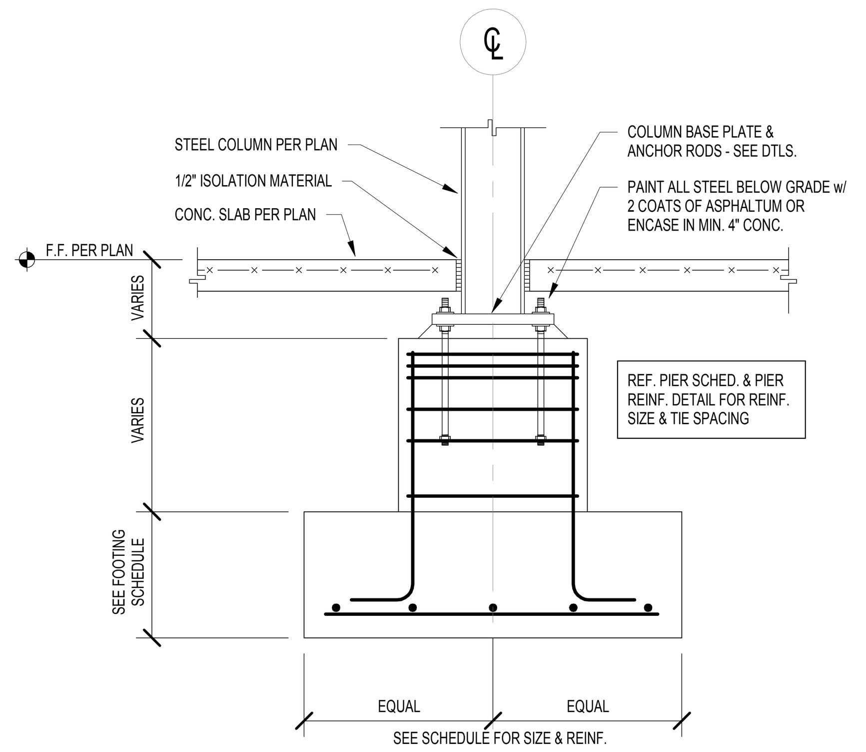

13/S401 INTERIOR COLUMN FOOTING w/PIER DETAIL
SCALE: NONE

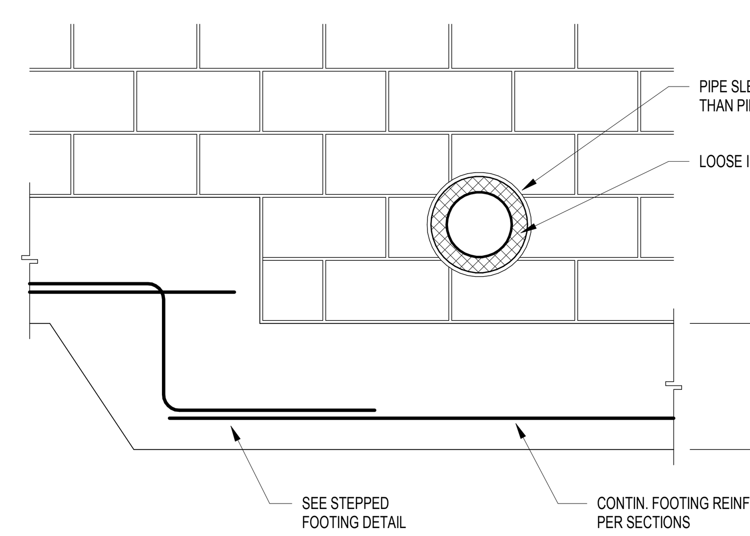

NOTES:
1. REFER TO PLUMBING DRAWINGS FOR INVERT ELEVATION OF ALL UNDERGROUND PIPING.
2. STEP FOOTING FOR PIPE PENETRATION THROUGH FOUNDATION WALL UNLESS WRITTEN PERMISSION IS OBTAINED FROM THE MEP ENGINEER.
3. PROVIDE PRECAST OR BOND BEAM LINTEL FOR MULTIPLE PENETRATIONS OR OPENINGS GREATER THAN 24" IN WIDTH.

14/S401 CMU FOUNDATION WALL SLEEVE
SCALE: NONE

NOTE: WHERE VERTICAL REINFORCING IS INTERRUPTED BY THE OPENING, HALF OF THE INTERRUPTED STEEL SHALL BE ADDED EACH SIDE OF THE OPENING. USE FULL LENGTH BARS. IF BARS CANNOT BE PLACED AS DETAILED, REPLACE THE 1'-6" EXTENSION WITH 6" AND A STANDARD HOOK.

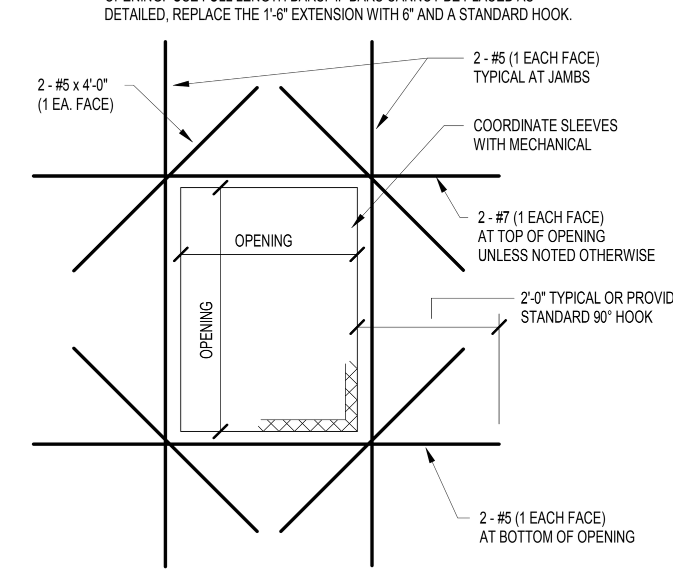

NOTE: COORDINATE FINAL LOCATION OF MECHANICAL PENETRATIONS WITH MECHANICAL CONTRACTOR BEFORE INSTALLATION OF THE REINFORCING.

THIS DETAIL APPLIES TO ALL SQUARE AND RECTANGULAR OPENINGS IN CONCRETE WALLS UNLESS OTHERWISE NOTED ON THE PLANS.

15/S401 CIP WALL - RECTANGULAR OPENING DETAIL
SCALE: NONE

NOTE: WHERE VERTICAL REINFORCING IS INTERRUPTED BY THE OPENING, HALF OF THE INTERRUPTED STEEL SHALL BE ADDED EACH SIDE OF THE OPENING. USE FULL LENGTH BARS. IF BARS CANNOT BE PLACED AS DETAILED, REPLACE THE 1'-6" EXTENSION WITH 6" AND A STANDARD HOOK.

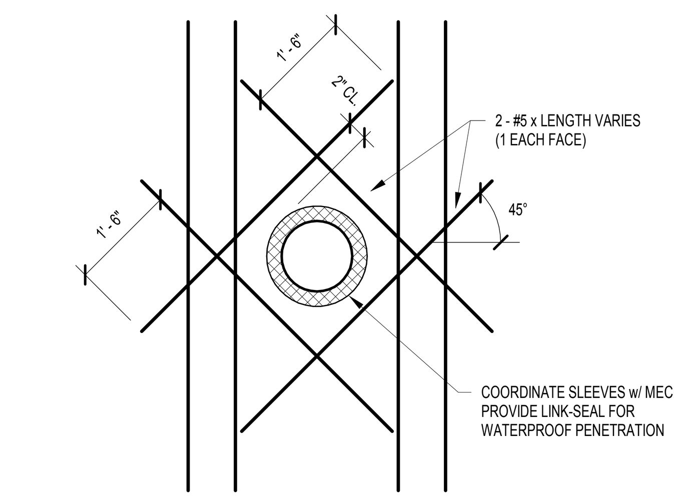

NOTE: COORDINATE FINAL LOCATION OF PIPE PENETRATIONS WITH MECHANICAL CONTRACTOR BEFORE INSTALLATION OF THE REINFORCING.

THIS DETAIL APPLIES TO ALL ROUND AND ELLIPTICAL OPENINGS IN CONCRETE WALLS, UNLESS OTHERWISE NOTED ON THE PLANS.

16/S401 CIP WALL - ROUND OPENING DETAIL
SCALE: NONE

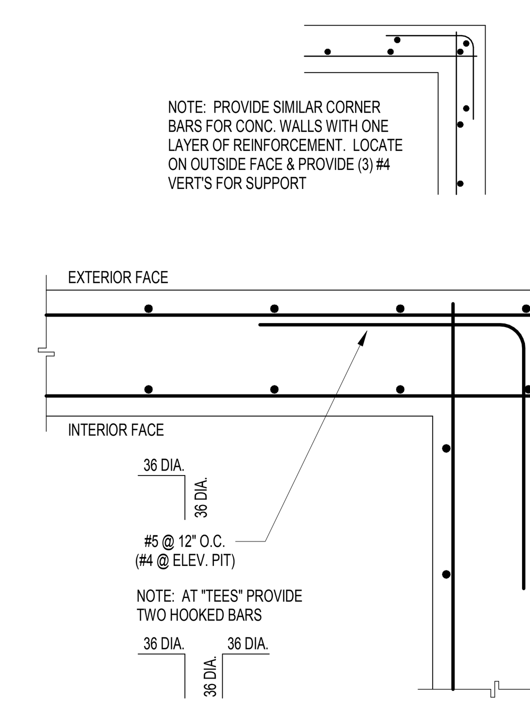

17/S401 CIP WALL CORNER REINF. DETAIL
SCALE: NONE

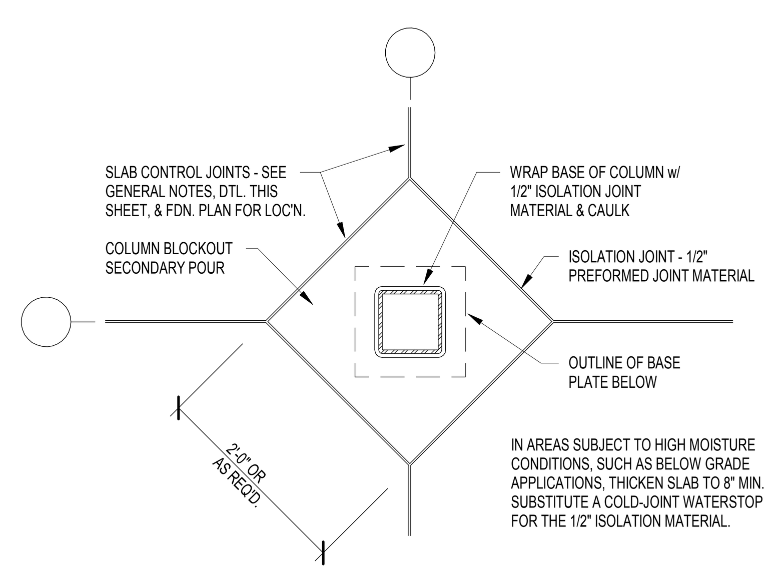

1. TUBE COLUMN SHOWN FOR ILLUSTRATIVE PURPOSES ONLY. WIDE FLANGES, PIPES, AND OTHER STEEL SHAPES ARE SIMILAR.
2. ADJUST 2'-0" DIMENSION AS REQUIRED TO ACCOMMODATE COLUMN BASE PLATES AND GROUTING PROCEDURES.
3. WHERE THIN-SET EPOXY TERRAZZO OR VINYL SHEET GOODS ARE THE SCHEDULED FLOOR FINISH, ELIMINATE THE DIAMOND-SHAPED ISOLATION JOINT AND EXTEND THE CONTROL JOINTS TO THE COLUMN.

18/S401 COLUMN ISOLATION JOINT DETAIL
SCALE: NONE

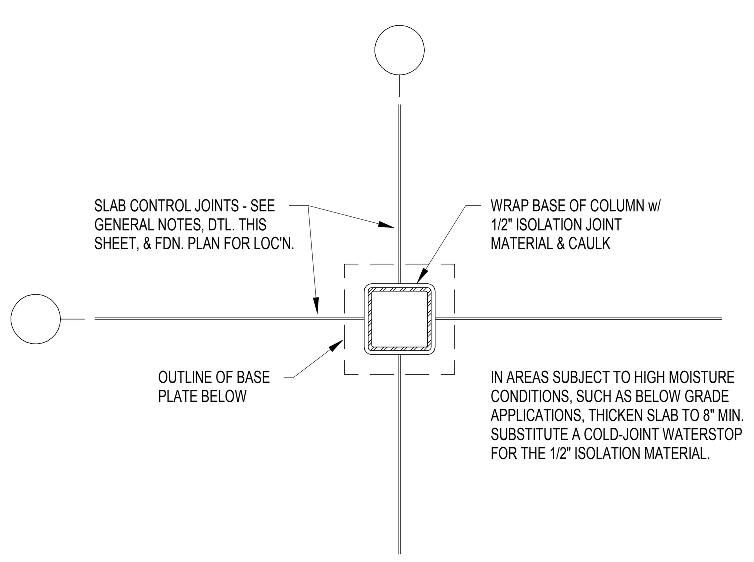

NOTE: THIS DETAIL SHOULD BE USED IN LIEU OF A DIAMOND OR ROUND ISOLATION JOINT TO PREVENT TELEGRAPHING THROUGH FINISH FLOOR MATERIALS SUCH AS THIN-SET TERRAZZO, CERAMIC TILE, VINYL TILE, ETC. SOME MINOR RANDOM SHRINKAGE CRACKS SHOULD BE ANTICIPATED. DETAIL IS SIMILAR AT WIDE-FLANGE COLUMNS.

19/S401 COLUMN ISOLATION JOINT DETAIL
SCALE: NONE

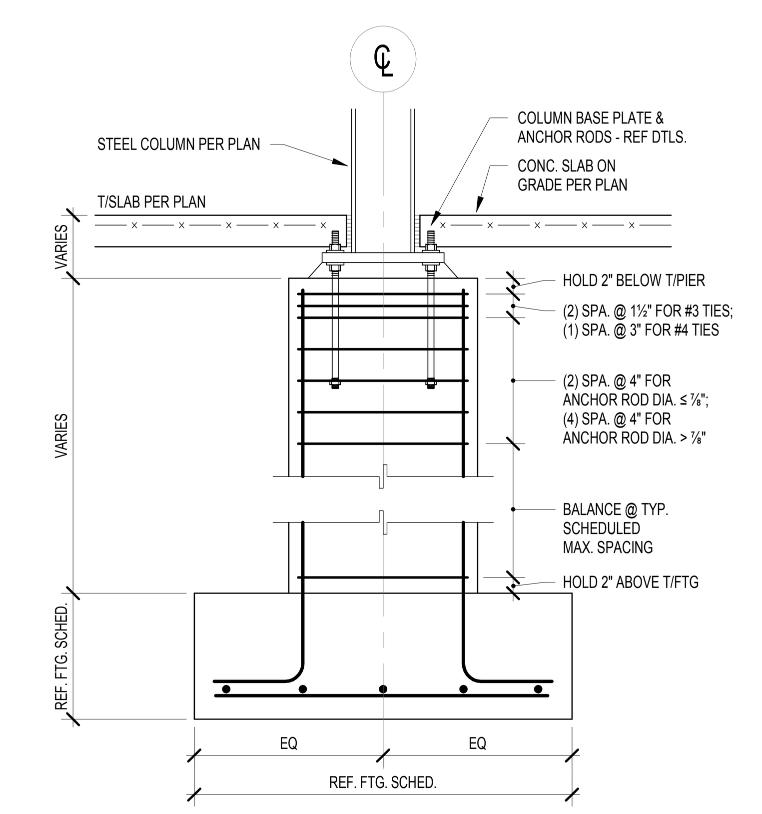

20/S401 CONCRETE PIER REINFORCING DETAIL
SCALE: NONE

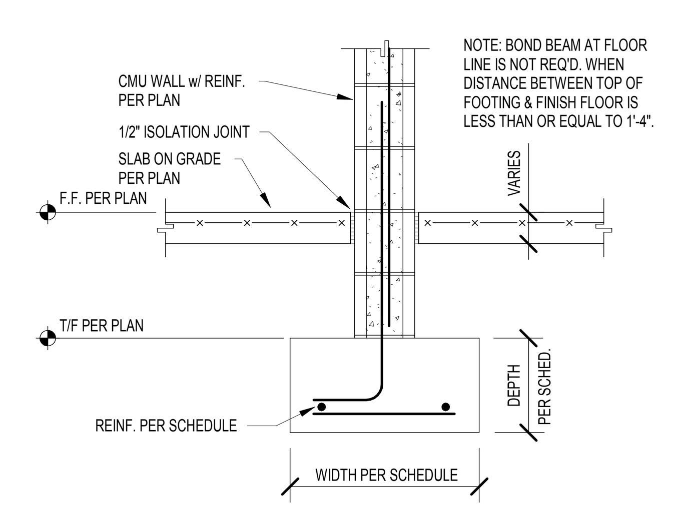

21/S401 INTERIOR WALL FOOTING DETAIL
SCALE: NONE

MADE @ PLAINFIELD

CSO
8831 Keystone Crossing, Indianapolis, IN 46240
317.848.7800 | csoinc.net
© 2018 CSO Architects, Inc. All Rights Reserved

Lynch, Harrison & Brumleve, Inc.
550 Virginia Avenue
Indianapolis, IN 46203
P 317.423.1550
F 317.423.1551

PROJECT:
TOWN OF PLAINFIELD
MADE@ PLAINFIELD
Red Pride Drive, Plainfield, IN 46168

SCOPE DRAWINGS:
These drawings indicate the general scope of the project in terms of architectural design concept, the dimensions of the building, the major architectural elements and the type of structural, mechanical and electrical systems. The drawings do not necessarily indicate or describe all work required for full performance and completion of the requirements of the Contract. On the basis of the general scope indicated or described, the trade contractors shall furnish all items required for the proper execution and completion of the work.

REVISIONS:

ISSUE DATE	DRAWN BY	CHECKED BY
01/16/2020	JRV	PAB

DRAWING TITLE:
TYPICAL DETAILS

CERTIFIED BY:
MARK D. LAVIER REGISTERED PE19400114 STATE OF INDIANA PROFESSIONAL ENGINEER

DRAWING NUMBER
S401

PROJECT NUMBER
19004

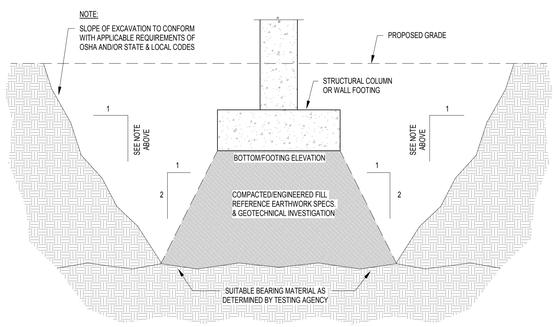

1. REFER TO THE SPECIFICATIONS FOR APPLICATION OF UNIT COSTS FOR REMOVAL OF UNSUITABLE BEARING MATERIAL & REPLACEMENT WITH COMPACTED, ENGINEERED FILL
2. REFER TO THE GEOTECHNICAL ENGINEERING REPORT FOR ADDITIONAL INFORMATION RE: EXPECTED SOIL CONDITIONS, SUITABILITY OF EX. SOILS FOR USE AS ENGINEERED FILL, GROUNDWATER CONDITIONS, ETC.

1 S402 OVEREXCAVATION DETAIL - ENGINEERED FILL
SCALE: NONE

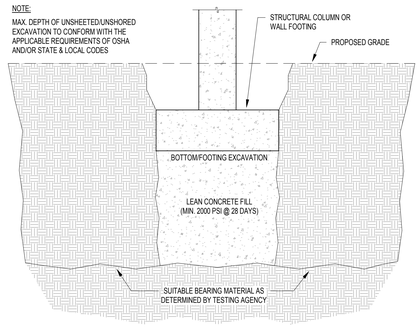

1. REFER TO THE SPECIFICATIONS FOR APPLICATION OF UNIT COSTS FOR REMOVAL OF UNSUITABLE BEARING MATERIAL & REPLACEMENT WITH LEAN CONCRETE FILL.
2. REFER TO THE GEOTECHNICAL ENGINEERING REPORT FOR ADDITIONAL INFORMATION RE: EXPECTED SOIL CONDITIONS, SUITABILITY OF EX. SOILS FOR USE AS ENGINEERED FILL, GROUNDWATER CONDITIONS, ETC.

2 S402 OVEREXCAVATION DETAIL - LEAN CONC. FILL
SCALE: NONE

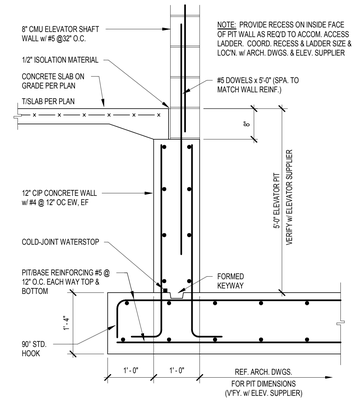

3 S402 ELEVATOR PIT DETAIL
SCALE: NONE

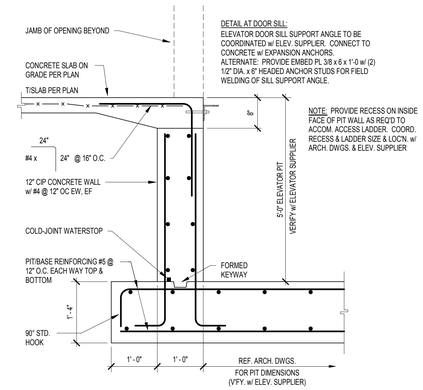

4 S402 ELEVATOR PIT DETAIL AT DOOR
SCALE: NONE

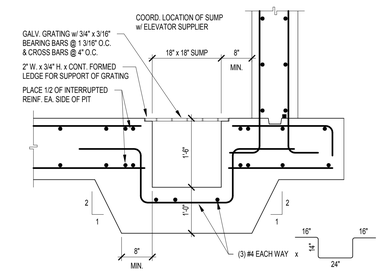

5 S402 ELEVATOR SUMP PIT DETAIL
SCALE: NONE

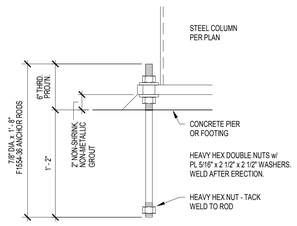

NOTES:
1. LOCATION OF ANCHOR RODS MUST NOT VARY MORE THAN 1/8" CENTER-TO-CENTER OF ANY TWO RODS WITHIN AN ANCHOR ROD GROUP.
2. HOLD MAX. DEVIATION OF 1/4". CENTER-TO-CENTER OF ADJACENT ANCHOR ROD GROUPS.
3. HOLD ELEVATION OF THE TOP OF THE ANCHOR RODS TO +/- 1/2 INCH.
4. HOLD MAXIMUM DEVIATION OF 1/4" FROM THE CENTER OF ANY ANCHOR ROD GROUP TO THE ESTABLISHED COLUMN LINE THROUGH THAT GROUP.
5. REFER TO THE AISC CODE OF STANDARD PRACTICE FOR ADDITIONAL INFORMATION.
6. TESTING AGENCY TO INSPECT TIGHTENING/TENSIONING OF ALL ANCHOR ROD NUTS IN BRACED FRAMES AND MOMENT FRAMES. WELD NUT & WASHER AFTER INSPECTION.

6 S402 7/8" DIA. ANCHOR ROD DETAIL
SCALE: NONE

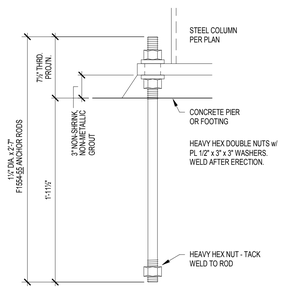

NOTES:
1. REF. DETAIL 6/S402 FOR BALANCE OF NOTES.

7 S402 1¼" DIA. ANCHOR ROD DETAIL
SCALE: NONE

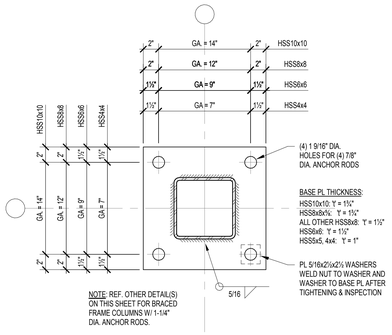

8 S402 BASE PL DETAIL - TYP HSS SQUARE
SCALE: NONE

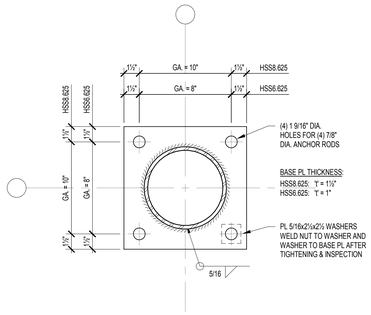

9 S402 BASE PL DETAIL - TYP HSS ROUND
SCALE: NONE

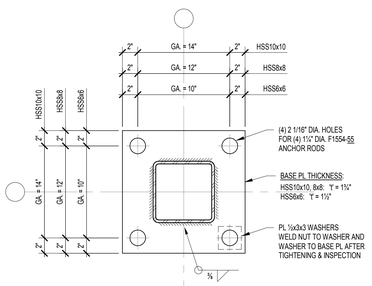

BRACED FRAME COLUMN WITHOUT GUSSET PL

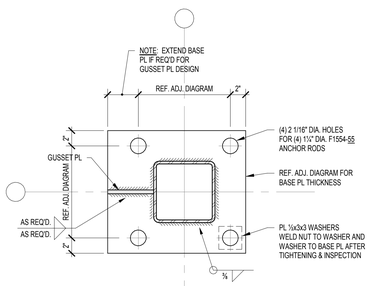

BRACED FRAME COLUMN WITH GUSSET PL

10 S402 BASE PL DETAILS - BRACED FRAME COLUMNS
SCALE: NONE

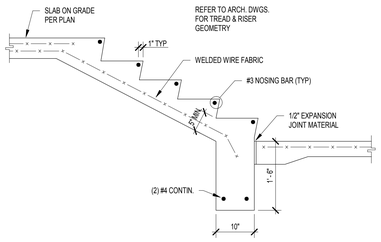

11 S402 CONCRETE STAIR ON GRADE
SCALE: NONE

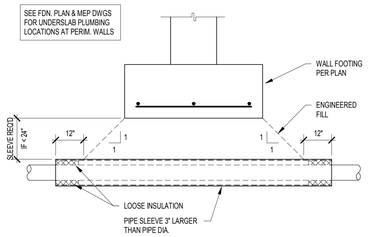

12 S402 SLEEVE UNDER WALL FOOTING
SCALE: NONE

MADE @ PLAINFIELD

CSO
8831 Keystone Crossing, Indianapolis, IN 46240
317.848.7600 | csoinc.net
© 2019 CSO Architects, Inc. All Rights Reserved

Lynch, Harrison & Brumleve, Inc.
P 317.423.1550
F 317.423.1551
550 Virginia Avenue
Indianapolis, IN 46203

PROJECT:
TOWN OF PLAINFIELD
MADE@ PLAINFIELD
Red Pride Drive, Plainfield, IN 46168

SCOPE DRAWINGS:
These drawings indicate the general scope of the project in terms of architectural design concept, the dimensions of the building, the major architectural elements and the type of construction and exterior finishes and materials.
The drawings do not necessarily indicate or describe all work required for full performance and completion of the requirements of the Contract.
On the basis of the general scope indicated or described, the contractor shall provide all work required for the proper execution and completion of the work.

REVISIONS:

ISSUE DATE	DRAWN BY	CHECKED BY
01/16/2020	JRV	PAB

DRAWING TITLE:
TYPICAL DETAILS

CERTIFIED BY:
MARK D. LAVEN REGISTERED PE19400114 STATE OF INDIANA PROFESSIONAL ENGINEER

DRAWING NUMBER
S402

PROJECT NUMBER
19004

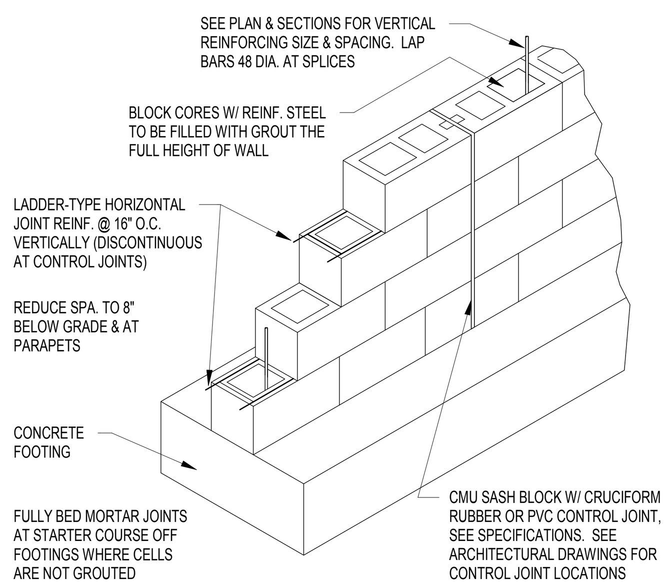

1 S403 REINFORCED MASONRY DETAIL
SCALE: NONE

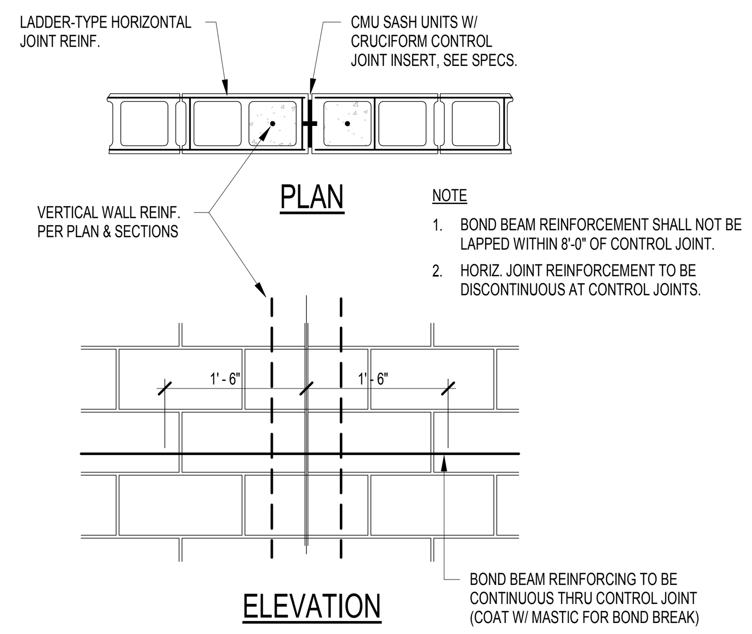

NOTE
1. BOND BEAM REINFORCEMENT SHALL NOT BE LAPPED WITHIN 8'-0" OF CONTROL JOINT.
2. HORIZ. JOINT REINFORCEMENT TO BE DISCONTINUOUS AT CONTROL JOINTS.

2 S403 CMU CONTROL JOINT DETAIL
SCALE: NONE

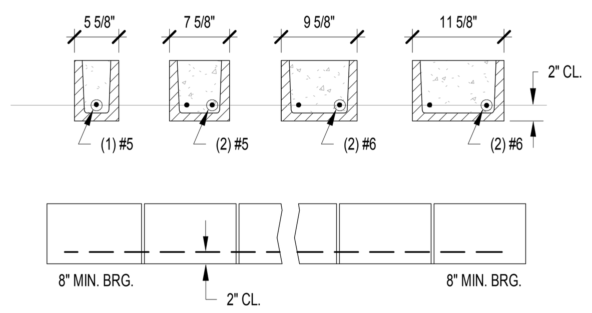

CMU LINTEL NOTES:
1. FILL SHALL BE 2,500 PSI (MINIMUM) GROUT.
2. PROVIDE 1" BRG. PER FOOT OF SPAN WITH 8" MIN.
3. LINTELS SHALL BEAR ON SOLIDLY GROUTED CMU.
4. THIS SCHEDULE DOES NOT APPLY TO LOAD BEARING WALLS, U.N.O.
5. BOND PATTERN OF LINTEL TO BE RUNNING BOND, U.N.O.
6. BOTTOM OF LINTEL SHALL BE SMOOTH MASONRY WITH NO CORES EXPOSED.
7. CONTRACTOR TO PROVIDE TEMPORARY SHORING UNTIL CMU HAS PROPERLY SET (3 DAY MINIMUM).
8. PRECAST LINTELS MAY NOT BE SUBSTITUTED FOR BOND BEAM LINTELS.
9. PROVIDE THIS DETAIL FOR OPENINGS UP TO 7'-11" U.N.O.

3 S403 TYPICAL CMU LINTEL DETAILS
SCALE: NONE

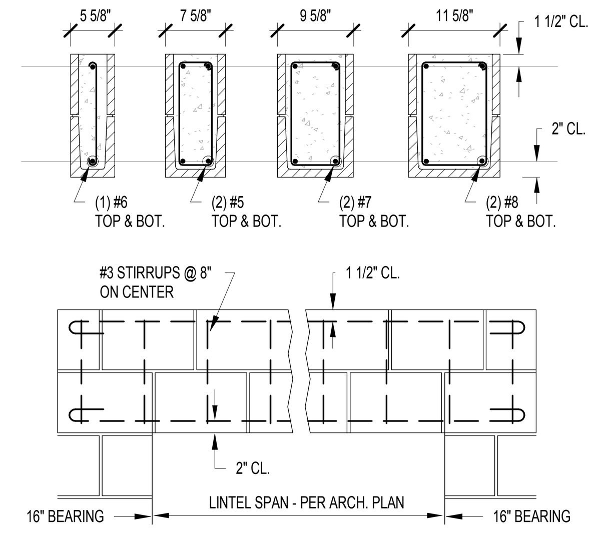

CMU LINTEL NOTES:
1. FILL SHALL BE 2,500 PSI (MINIMUM) GROUT.
2. ALL REBARS ARE HOOKED AT THE ENDS.
3. REFER TO SPECS. FOR TYPE OF CMU.
4. LINTELS SHALL BEAR ON SOLIDLY GROUTED CMU.
5. THIS SCHEDULE DOES NOT APPLY TO LOAD BEARING WALLS, U.N.O.
6. BOND PATTERN OF LINTEL TO BE RUNNING BOND, U.N.O.
7. BOTTOM OF LINTEL SHALL BE SMOOTH MASONRY WITH NO CORES EXPOSED.
8. CONTRACTOR TO PROVIDE TEMPORARY SHORING UNTIL CMU HAS PROPERLY SET (3 DAY MINIMUM).
9. PROVIDE THIS DETAIL FOR OPENINGS BETWEEN 8'-0" & 12'-0" U.N.O.

4 S403 LONG CMU LINTEL DETAILS
SCALE: NONE

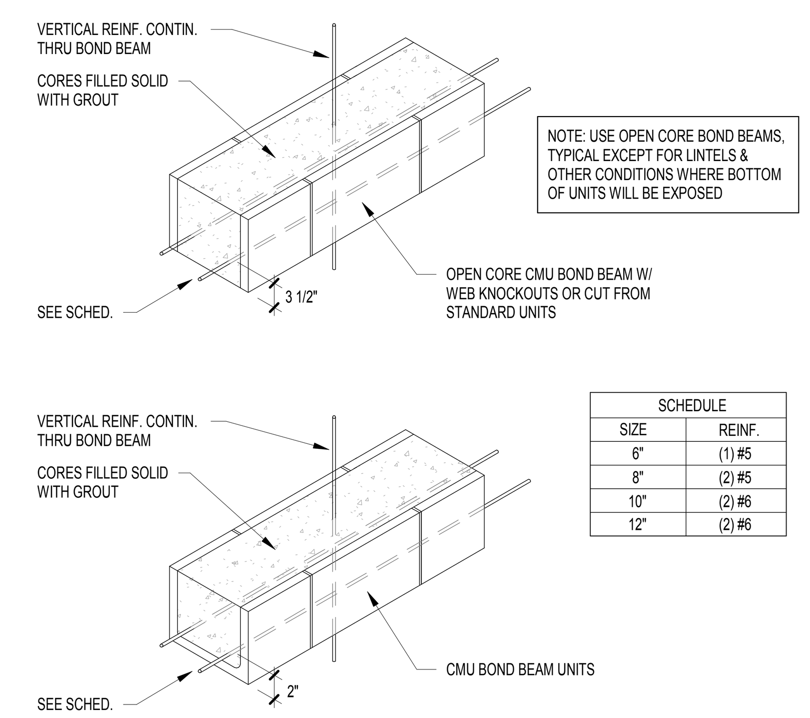

NOTE: USE OPEN CORE BOND BEAMS, TYPICAL EXCEPT FOR LINTELS & OTHER CONDITIONS WHERE BOTTOM OF UNITS WILL BE EXPOSED

SCHEDULE	
SIZE	REINF.
6"	(1) #5
8"	(2) #5
10"	(2) #6
12"	(2) #6

5 S403 CMU BOND BEAM DETAILS
SCALE: NONE

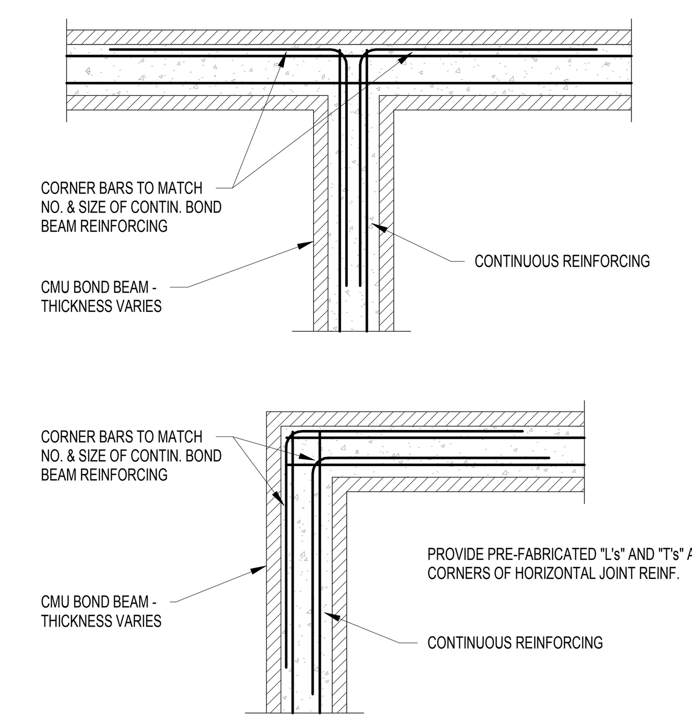

6 S403 BOND BEAM INTERSECTION DETAILS
SCALE: NONE

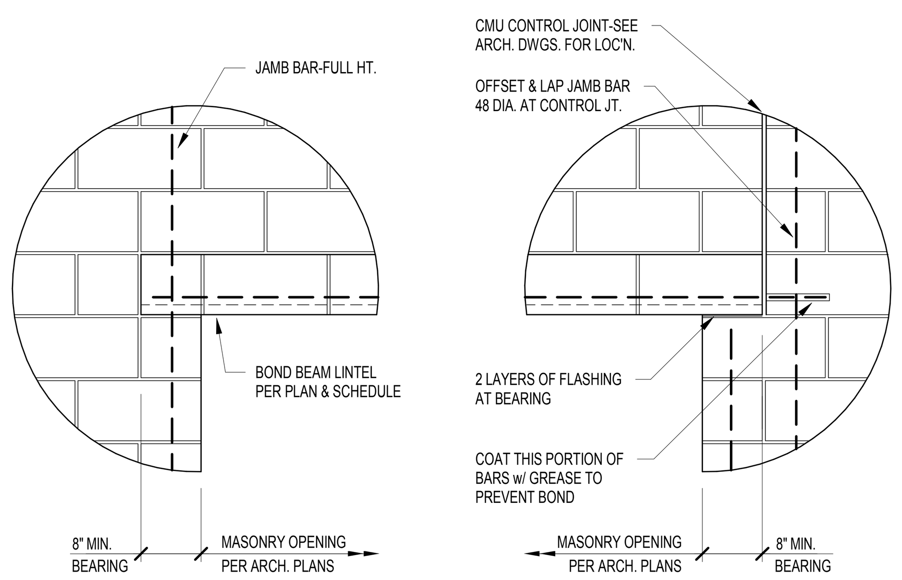

NOT AT CONTROL JOINT

AT CONTROL JOINT

7 S403 BOND BEAM LINTEL BEARING DETAILS
SCALE: NONE

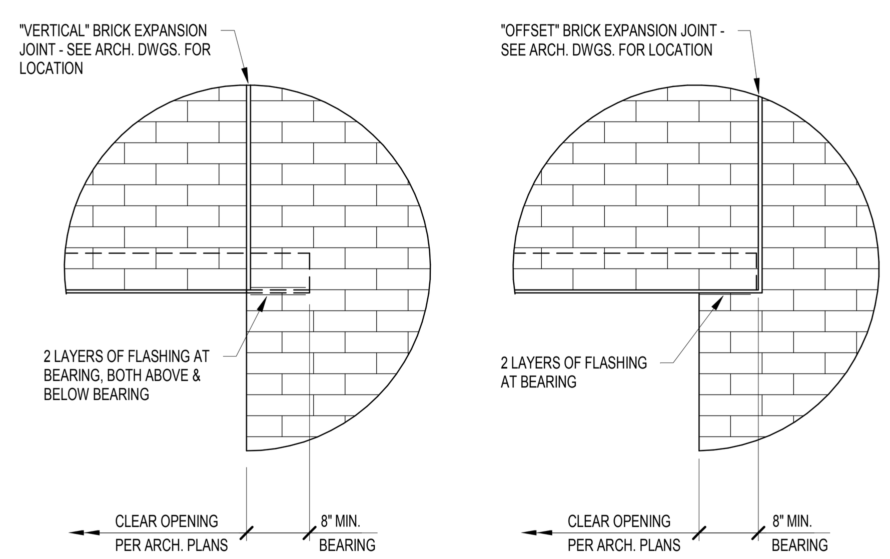

NOTE: LINTELS FOR STONE VENEER ARE SIMILAR.

AT "VERTICAL" BRICK EXPANSION JOINT

AT "OFFSET" BRICK EXPANSION JOINT

8 S403 LINTEL BEARING DETAILS
SCALE: NONE

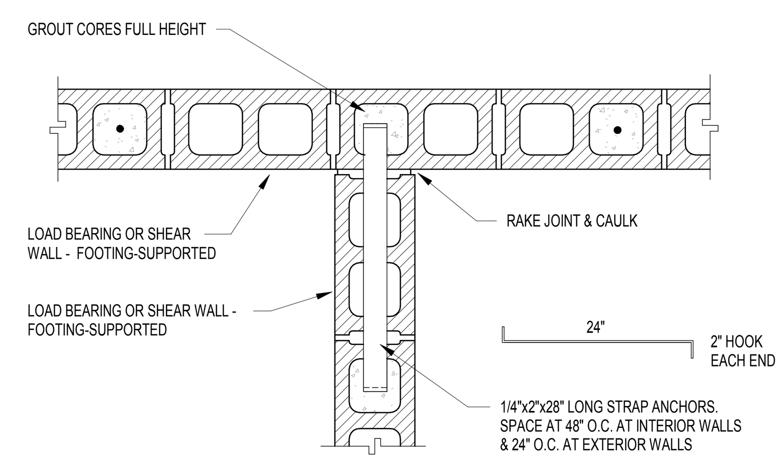

TYPICAL AT INTERSECTION BETWEEN FOOTING-SUPPORTED CMU WALLS

9 S403 WALL INTERSECTION DETAIL
SCALE: NONE

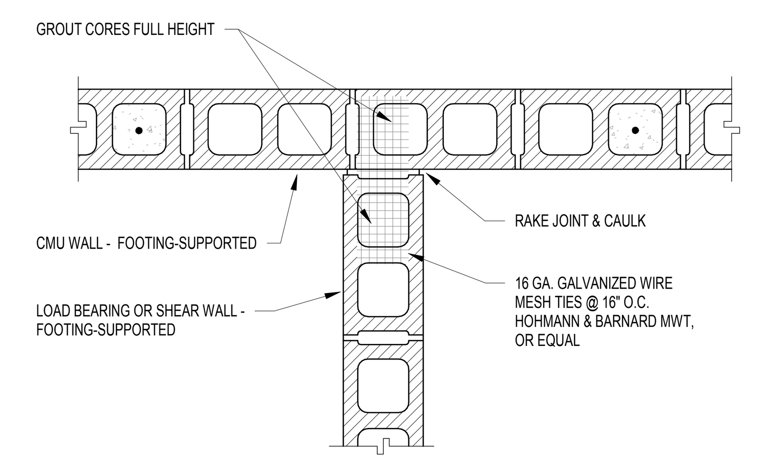

TYPICAL AT INTERSECTION BETWEEN FOOTING-SUPPORTED AND SLAB-SUPPORTED CMU WALLS

10 S403 WALL INTERSECTION DETAIL
SCALE: NONE

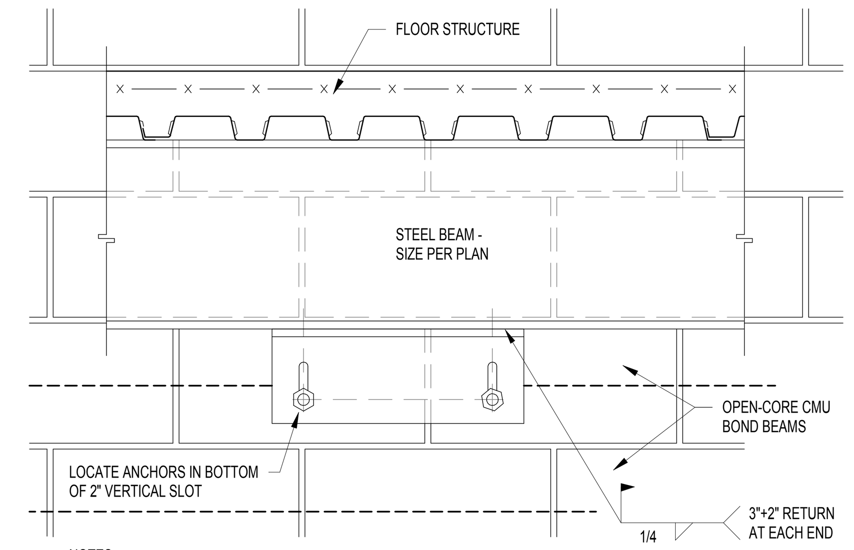

NOTES:
1. PROVIDE L6x6x5/16 x 1' - 4" LONG ANGLE/ANCHOR ASSEMBLIES W/ (2) ADHESIVE ANCHORS TO GROUTED CMU. SPACE ASSEMBLIES 6' - 8" ON CENTER MAXIMUM WITH A MINIMUM OF TWO PER LENGTH OF WALL. WHERE DIM. BETWEEN BEAM CL & FACE OF WALL IS > 7", PROVIDE BENT PL 1/4 x 6 x 'REQ'D. HORIZ. DIM.'
2. ADHESIVE ANCHOR ASSEMBLIES TO BE HILTI HIT-HY 200, OR APPROVED EQUAL, 3/4" DIAMETER W/ 6" EMBEDMENT INTO GROUTED MASONRY.
3. FINGER-TIGHTEN NUT & FOUL THREADS OR DOUBLE-NUT TO PREVENT BACKOFF.
4. PROVIDE ANGLE/ANCHOR ASSEMBLY WHERE DISTANCE BETWEEN INTERSECTING WALL, PILASTER, OR CORNER EXCEEDS 30x THE NOMINAL WALL THICKNESS. COORDINATE W/ ARCH. FLOOR PLANS.
5. IF PROVISIONS IN SPECIFIC SECTIONS CONTRAST WITH THIS TYPICAL DETAIL, THE REQUIREMENTS OF THE SPECIFIC SECTION CONTROL.

11 S403 CMU LATERAL SUPPORT DETAIL
SCALE: NONE

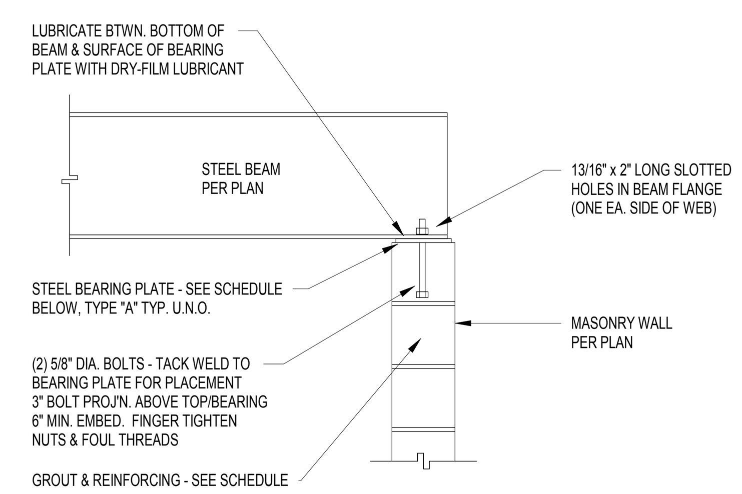

BEAM PERPENDICULAR TO WALL

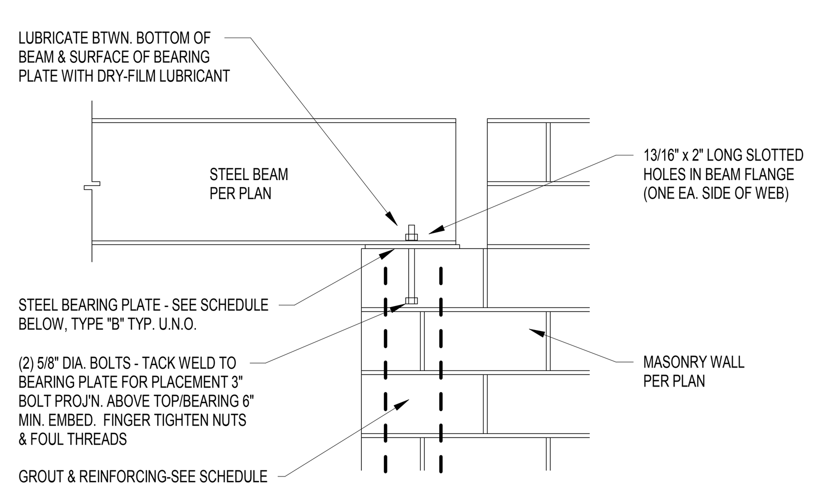

BEAM PARALLEL TO WALL

BEARING PLATE SCHEDULE			
MARK	BEARING PLATE SIZE	GROUT REQUIREMENTS	REINFORCING
A	3/4 x 6 1/2 x 1'-0	MIN. 3 COURSES DEEP x 24" LONG	NONE UNLESS LOCATED AT DISCONTIN. END OF WALL (IF SO, PROVIDE (2) FULL-HEIGHT VERTS. & EXTEND GROUT TO FTG.)
B	1/2 x 6 1/2 x 1'-0	GROUT SOLID TO FTG x 24" LONG	(2) VERTICALS FULL HEIGHT OF WALL. SEE PLANS & DETAILS FOR SIZE.

12 S403 BEAM BEARING PLATE DETAILS
SCALE: NONE

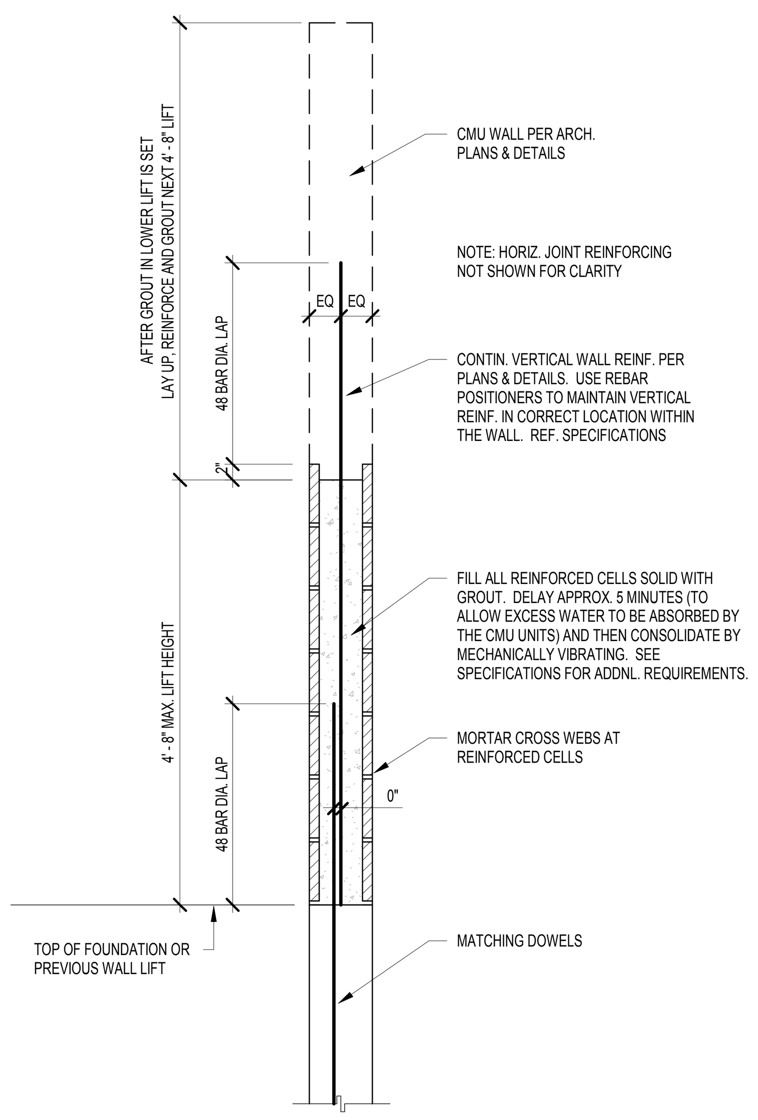

13 S403 LOW-LIFT WALL CONSTRUCTION
SCALE: NONE

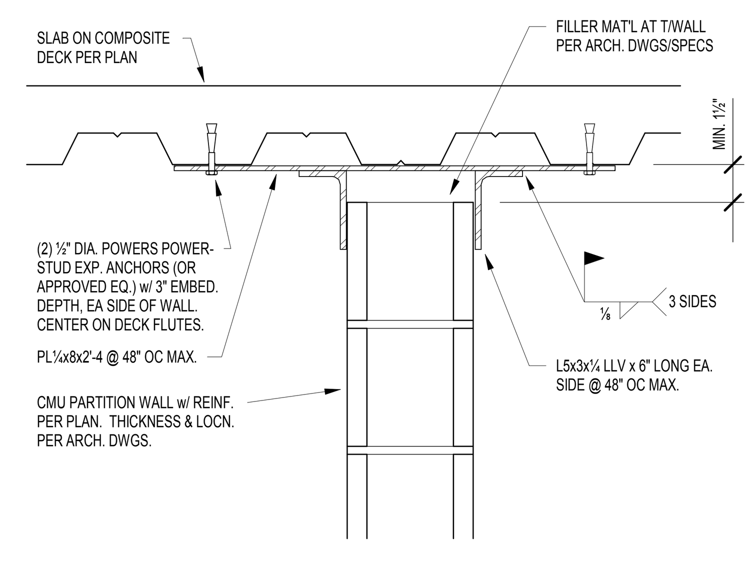

CMU WALL PARALLEL TO DECK SPAN

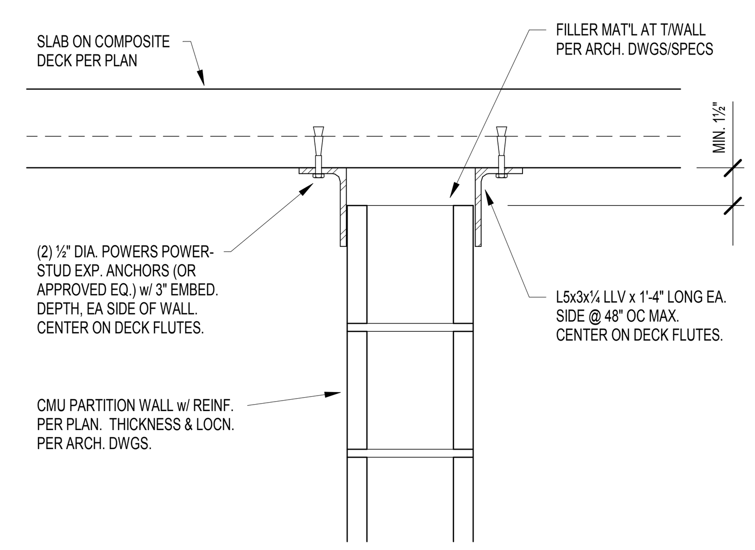

CMU WALL PERP. TO DECK SPAN

14 S403 CMU PARTITION LATERAL SUPPORT AT SLAB ON DECK
SCALE: NONE

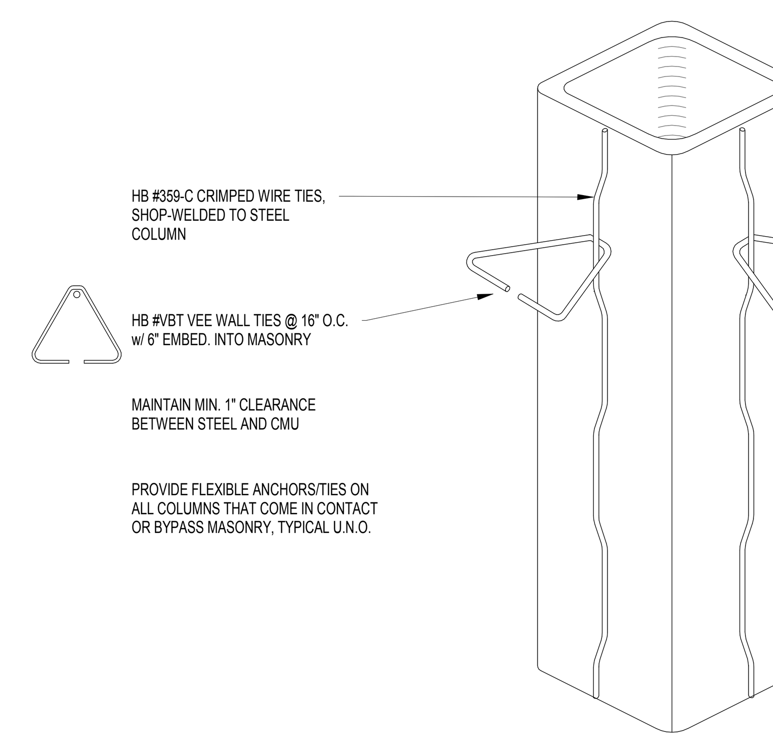

15 S403 ADJUSTABLE FLEXIBLE TIE DETAIL
SCALE: NONE

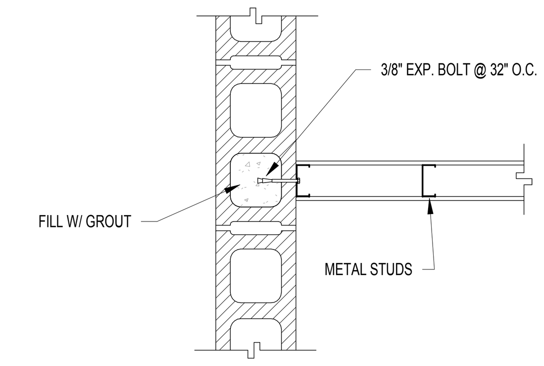

16 S403 CMU WALL/STUD WALL INTERSECTION
SCALE: NONE

MADE @ PLAINFIELD

CSO
8831 Keystone Crossing, Indianapolis, IN 46240
317.848.7800 | csoinc.net
© 2018 CSO Architects, Inc. All Rights Reserved

Lynch, Harrison & Brumleve, Inc.
550 Virginia Avenue
Indianapolis, IN 46203
P 317.423.1550
F 317.423.1551

PROJECT:
TOWN OF PLAINFIELD
MADE@ PLAINFIELD
Red Pride Drive, Plainfield, IN 46168

SCOPE DRAWINGS:
These drawings indicate the general scope of the project in terms of architectural design concept, the dimensions of the building, the major architectural elements and the type of structural, mechanical and electrical systems.
The drawings do not necessarily indicate or describe all work required for full performance and completion of the requirements of the Contract.
On the basis of the general scope indicated or described, the trade contractors shall furnish all items required for the proper execution and completion of the work.

REVISIONS:

ISSUE DATE	DRAWN BY	CHECKED BY
01/16/2020	JRV	PAB

DRAWING TITLE:
TYPICAL DETAILS

CERTIFIED BY:
MARK D. LaVIER
REGISTERED
PE19400114
STATE OF INDIANA
PROFESSIONAL ENGINEER

DRAWING NUMBER
S403

PROJECT NUMBER
19004

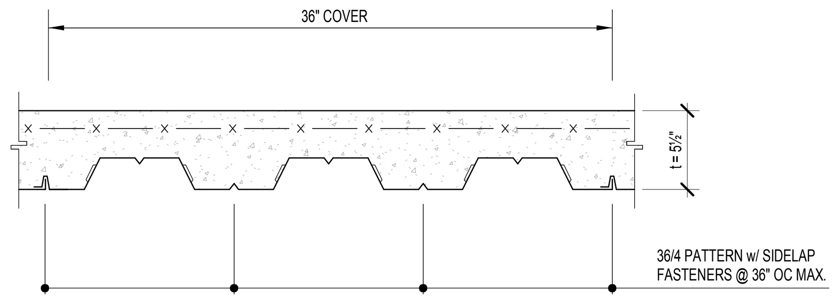

NOTE:

1. 2", 20 GA. GALVANIZED COMPOSITE STEEL FLOOR DECK w/ 3½" NORMAL WEIGHT CONCRETE SLAB w/ 6x6-W2.1xW2.1 WWF, TOTAL 't' = 5½".
2. WELD DECK TO SUPPORTING STRUCTURE USING 3/4" DIAMETER WELDS. MECHANICAL FASTENERS MAY BE USED IN LIEU OF WELDS; SUBMIT PROPOSED FASTENERS & TECHNICAL DATA FOR REVIEW. COMPOSITE SHEAR CONNECTORS MAY TAKE THE PLACE OF WELDS AT COMPOSITE BEAMS.
3. BUTT ENDS OF DECK OVER SUPPORT.
4. USE #10 TEK SCREW SIDELAP FASTENERS, U.N.O.
5. REFER TO SPECIFICATIONS FOR ADDITIONAL INFORMATION.
6. REF. SLAB TYPE (F) ON THE FRAMING PLANS.
7. MAXIMUM UNSHORED CLEAR SPANS SHALL NOT EXCEED THE FOLLOWING:

SINGLE SPAN:	7'-5"
DOUBLE SPAN:	9'-5"
TRIPLE SPAN:	9'-9"

SPANS SHOWN ARE BASED ON VULCRAFT 2" VLI 20 GA. DECK. THE CONTRACTOR MUST CONFIRM THAT ALTERNATE DECK PRODUCTS MEET OR EXCEED THE SPANS SHOWN. CONTRACTOR SHALL SHORE ALL SPANS EXCEEDING THE LIMITS ABOVE UNTIL CONCRETE HAS ACHIEVED ITS SPECIFIED 28-DAY COMPRESSIVE STRENGTH.

1/S404 2" COMPOSITE STEEL DECK/SLAB
SCALE: NONE

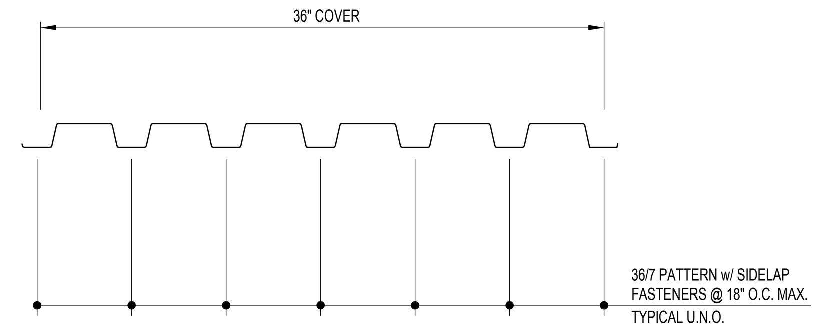

NOTE:

1. 1½", 20 GA. GALVANIZED & PRIME-PAINTED WIDE RIB STEEL ROOF DECK.
2. MECHANICAL FASTENERS SHALL BE USED IN LIEU OF WELDS.
   USE THE FOLLOWING HILTI POWDER ACTUATED FASTENERS:
   USE X-HSN 24 FOR OPEN-WEB STEEL JOISTS & STRUCTURAL STEEL 1/8" ≤ 't' ≤ 3/8"
   USE X-ENP-19 L15 FOR STRUCTURAL STEEL & HEAVY OPEN-WEB JOISTS 't' ≥ 1/4"
   ACCEPTABLE ALTERNATE: PNEUTEK AIR/SAFE FASTENING SYSTEM.
   SUBMIT PROPOSED FASTENERS & TECHNICAL DATA FOR REVIEW.
3. USE #10 TEK SCREW SIDELAP FASTENERS, U.N.O.
4. REF. DECK TYPE (1) ON THE FRAMING PLANS.
5. REFER TO SPECIFICATIONS FOR ADDITIONAL INFORMATION.

2/S404 1½" WIDE RIB STEEL ROOF DECK
SCALE: NONE

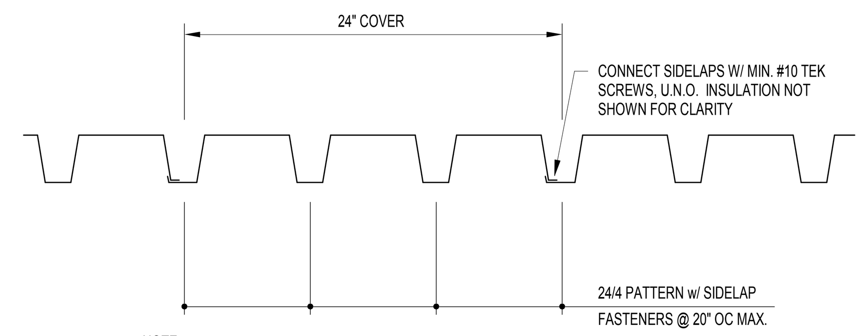

NOTE:

1. 3", 20 GA. GALVANIZED & PRIME-PAINTED DEEP RIB STEEL ROOF DECK.
2. MECHANICAL FASTENERS SHALL BE USED IN LIEU OF WELDS.
   USE THE FOLLOWING HILTI POWDER ACTUATED FASTENERS:
   USE X-HSN 24 FOR OPEN-WEB STEEL JOISTS & STRUCTURAL STEEL 1/8" ≤ 't' ≤ 3/8"
   USE X-ENP-19 L15 FOR STRUCTURAL STEEL & HEAVY OPEN-WEB JOISTS 't' ≥ 1/4"
   ACCEPTABLE ALTERNATE: PNEUTEK AIR/SAFE FASTENING SYSTEM.
   SUBMIT PROPOSED FASTENERS & TECHNICAL DATA FOR REVIEW.
3. USE #10 TEK SCREW SIDELAP FASTENERS, U.N.O.
4. REF. DECK TYPE (3) ON THE FRAMING PLANS.
5. REFER TO SPECIFICATIONS FOR ADDITIONAL INFORMATION.

3/S404 3" DEEP RIB STEEL ROOF DECK
SCALE: NONE

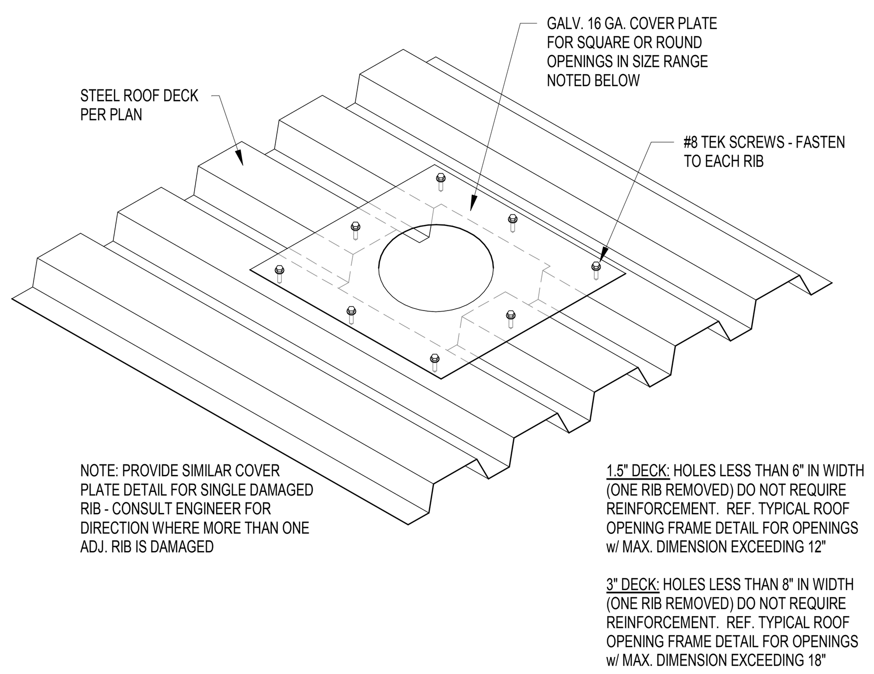

NOTE: PROVIDE SIMILAR COVER PLATE DETAIL FOR SINGLE DAMAGED RIB - CONSULT ENGINEER FOR DIRECTION WHERE MORE THAN ONE ADJ. RIB IS DAMAGED

1.5" DECK: HOLES LESS THAN 6" IN WIDTH (ONE RIB REMOVED) DO NOT REQUIRE REINFORCEMENT. REF. TYPICAL ROOF OPENING FRAME DETAIL FOR OPENINGS w/ MAX. DIMENSION EXCEEDING 12"

3" DECK: HOLES LESS THAN 8" IN WIDTH (ONE RIB REMOVED) DO NOT REQUIRE REINFORCEMENT. REF. TYPICAL ROOF OPENING FRAME DETAIL FOR OPENINGS w/ MAX. DIMENSION EXCEEDING 18"

4/S404 SMALL ROOF OPENING DETAIL
SCALE: NONE

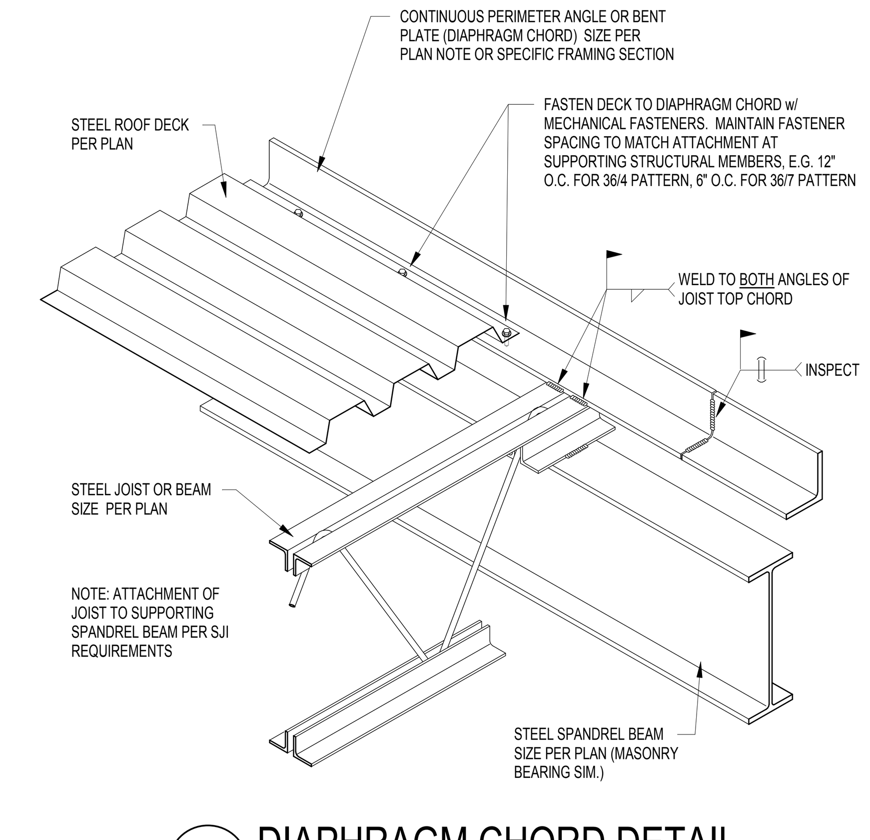

5/S404 DIAPHRAGM CHORD DETAIL
SCALE: NONE

NOTE: ASSUME THAT ALL BENT PLATE SLAB EDGES SHALL BE FIELD WELDED AFTER ADJUSTMENT TO MAINTAIN TOLERANCES AND REQ'D. CLEARANCES. SLAB CLOSURES FOR SHORT MEMBERS, OR FOR SLAB EDGES WHERE TOLERANCES ARE NOT CRITICAL MAY BE SHOP-WELDED PENDING APPROVAL OF THE ENGINEER. THE FABRICATOR & ERECTOR SHALL COORDINATE ALL FIELD WELDING VS. SHOP WELDING AT THE TIME OF BIDDING. LACK OF FIELD WELD SYMBOLS ON SPECIFIC SECTIONS DOES NOT RELIEVE THE FABRICATOR/ERECTOR FROM THE RESPONSIBILITY TO MAINTAIN TOLERANCES.

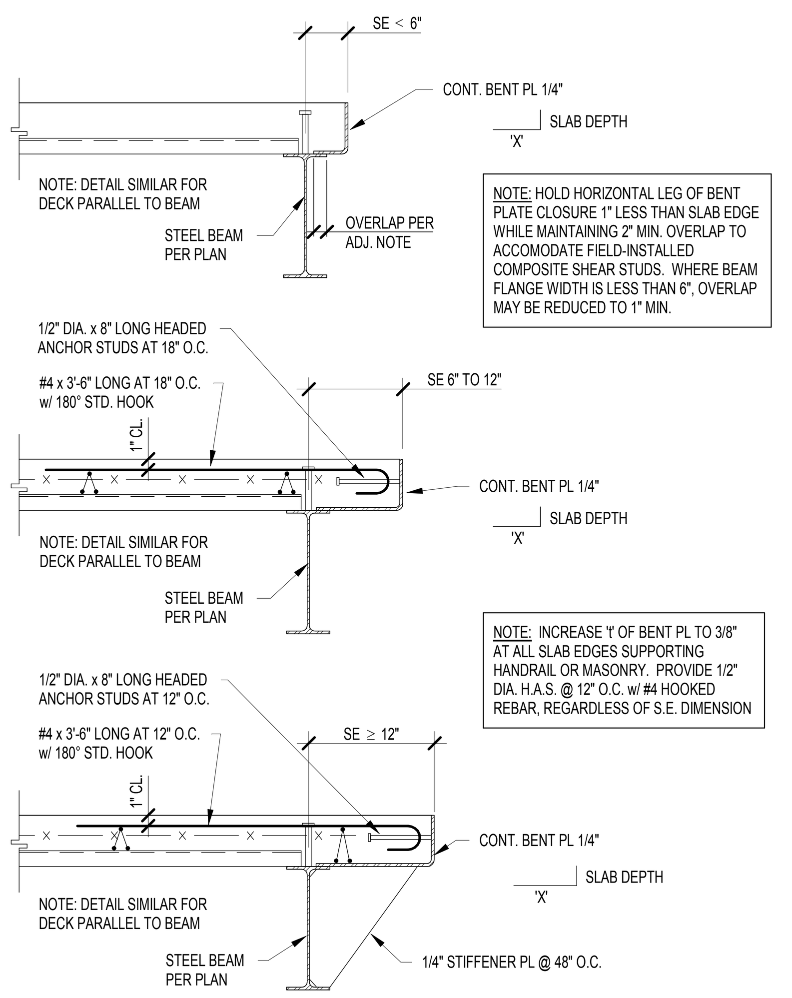

NOTE: HOLD HORIZONTAL LEG OF BENT PLATE CLOSURE 1" LESS THAN SLAB EDGE WHILE MAINTAINING 2" MIN. OVERLAP TO ACCOMODATE FIELD-INSTALLED COMPOSITE SHEAR STUDS. WHERE BEAM FLANGE WIDTH IS LESS THAN 6", OVERLAP MAY BE REDUCED TO 1" MIN.

NOTE: INCREASE 't' OF BENT PL TO 3/8" AT ALL SLAB EDGES SUPPORTING HANDRAIL OR MASONRY. PROVIDE 1/2" DIA. H.A.S. @ 12" O.C. w/ #4 HOOKED REBAR, REGARDLESS OF S.E. DIMENSION

NOTE: SE = SLAB EDGE PER PLAN

6/S404 TYPICAL SLAB EDGE DETAILS
SCALE: NONE

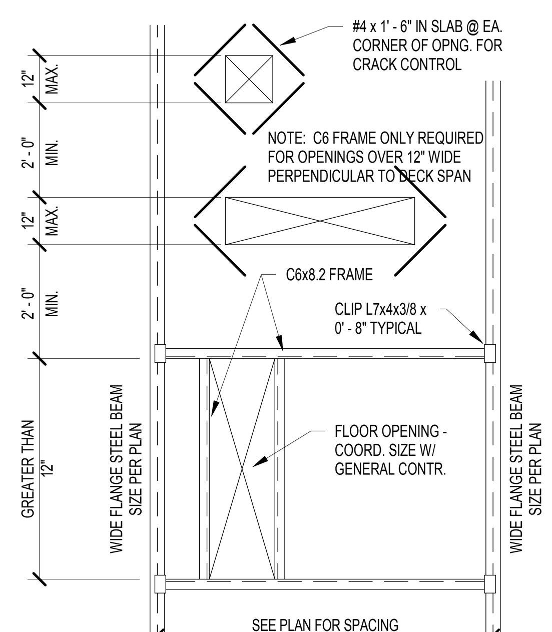

PLAN

NOTE: IF THE OPENING IS POST-INSTALLED AFTER THE SLAB IS POURED, THE CLIP ANGLES MAY BE OMITTED AND THE CHANNELS MAY BE CONNECTED DIRECTLY TO THE BEAM WEB.

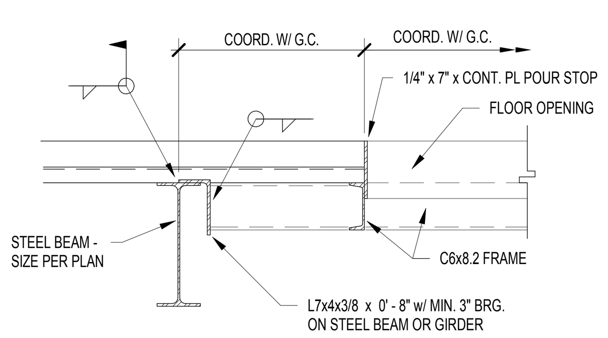

SECTION

7/S404 SLAB ON DECK OPENING FRAME DETAIL
SCALE: NONE

NOTES:

1. PROVIDE ANGLE FRAME AS SHOWN FOR ALL ROOF OPENINGS IN 1 1/2" WIDE-RIB DECK WITH MAXIMUM DIMENSION EXCEEDING 1' - 0".
2. USE: L4x4x1/4 TYPICAL.
3. COORDINATE LOCATION OF ROOF OPENINGS WITH MECHANICAL AND ARCHITECTURAL DRAWINGS.
4. AT ROOF ACCESS HATCH, PROVIDE CHANNEL FRAME INSTEAD OF ANGLE FRAME (REF. ADJ. DETAIL).

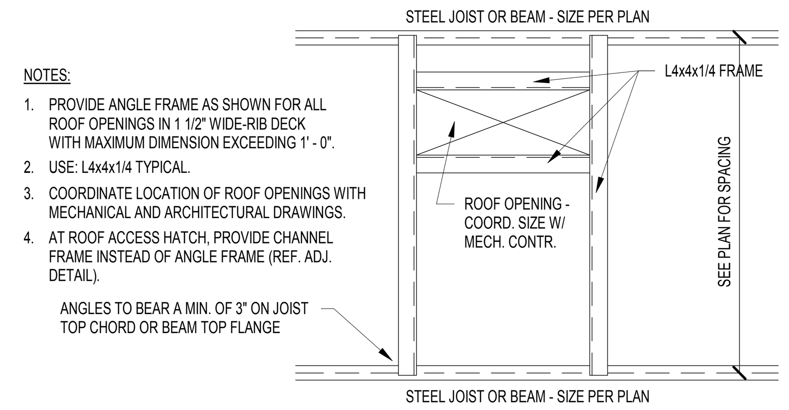

PLAN

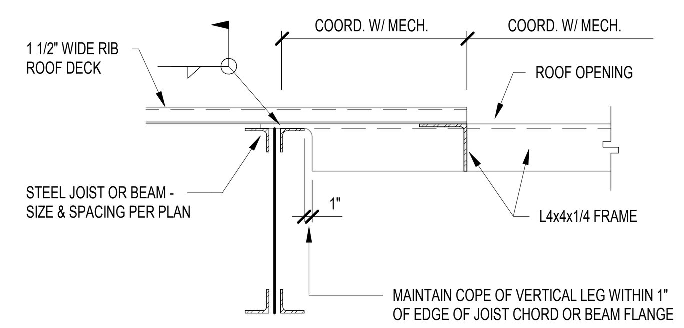

SECTION

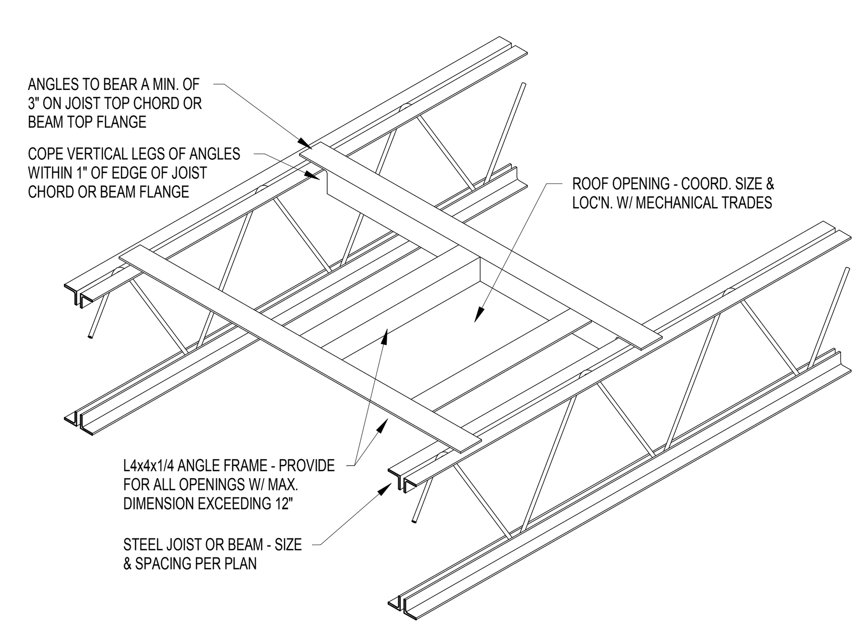

ISOMETRIC

8/S404 ROOF OPENING FRAME DETAIL - 1½" DECK
SCALE: NONE

NOTES:

1. PROVIDE CHANNEL FRAME AS SHOWN FOR ALL ROOF OPENINGS IN 3" ROOF DECK WITH MAX. DIMENSION EXCEEDING 1' - 6".
2. USE: C6x8.2 W/ CLIP L7x4x3/8 TYPICAL.
3. COORDINATE LOCATION OF ROOF OPENINGS WITH MECHANICAL AND ARCHITECTURAL DRAWINGS.
4. ALSO PROVIDE CHANNEL FRAME AT ROOF ACCESS HATCH IN 1.5" ROOF DECK.

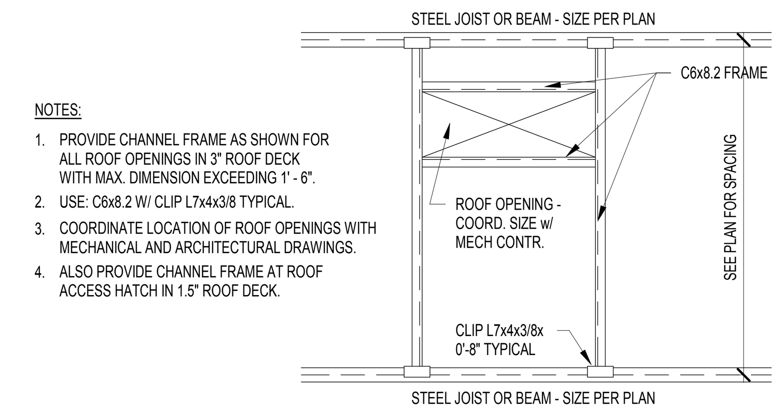

PLAN

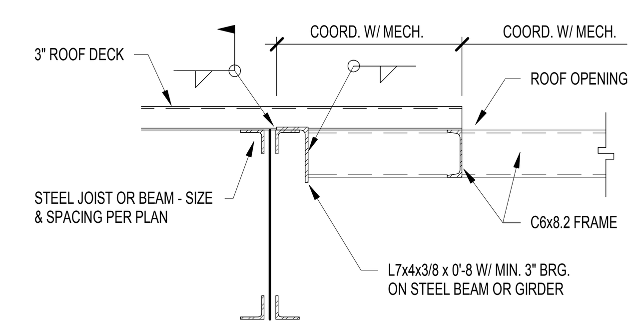

SECTION

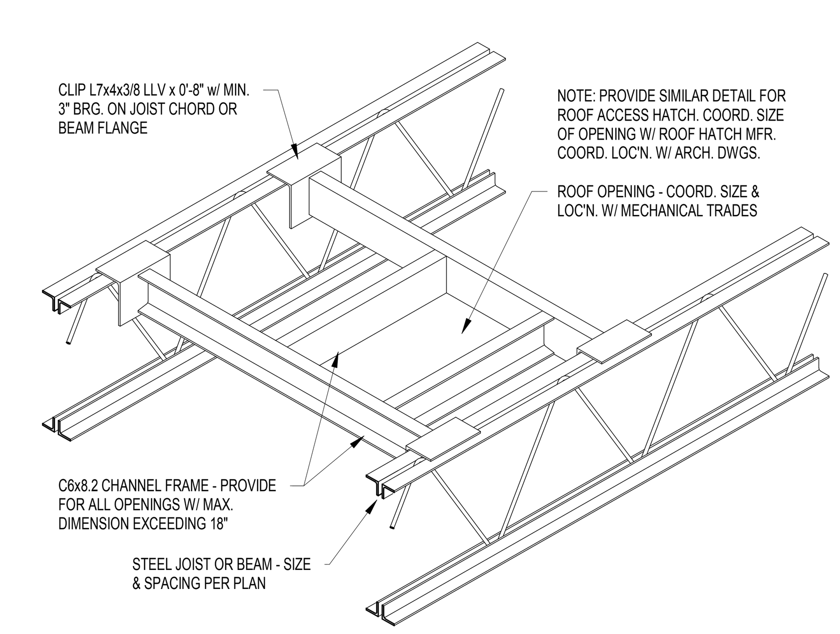

ISOMETRIC

9/S404 ROOF OPENING FRAME DETAIL - 3" DECK
SCALE: NONE

CHANNEL SIZE	
3" DEEP-RIB DECK	(2) MC8x22.8 (STITCH WELD TOGETHER)
1.5" WIDE-RIB DECK	C12x20.7

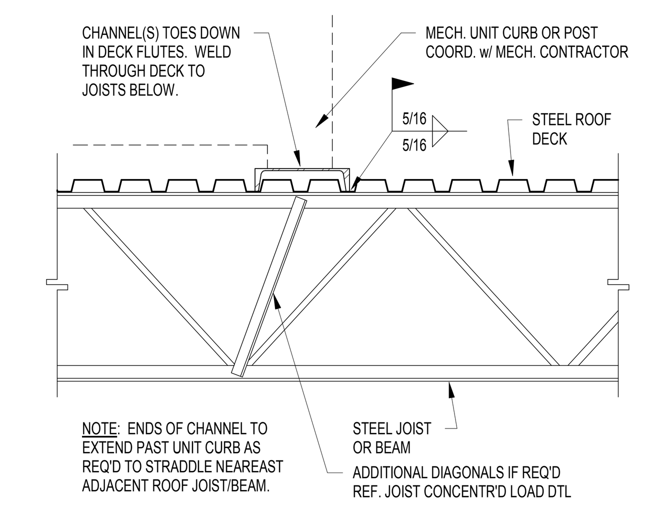

NOTE: ENDS OF CHANNEL TO EXTEND PAST UNIT CURB AS REQ'D TO STRADDLE NEAREAST ADJACENT ROOF JOIST/BEAM.

10/S404 ROOFTOP UNIT CURB SUPPORT DETAIL
SCALE: NONE

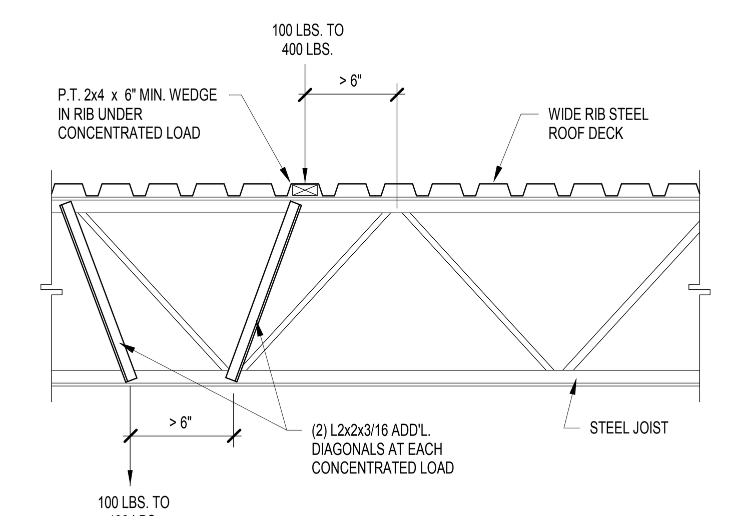

1. LOADS LESS THAN 100 LBS. MAY BE LOCATED ANYWHERE ALONG THE TOP OR BOTTOM CHORD OF THE JOIST WITHOUT REQUIRING REINFORCEMENT.
2. PROVIDE THIS DETAIL WHERE SUSPENDED EQUIPMENT, MECHANICAL UNIT, OR PIPING IMPARTS A CONCENTRATED LOAD OF BETWEEN 100 AND 400 LBS. IF THE LOAD IS APPLIED WITHIN 6" OF A TOP OR BOTTOM CHORD PANEL POINT, NO REINFORCEMENT IS REQUIRED.
3. NO CONCENTRATED LOADS GREATER THAN 400 LBS WILL BE ALLOWED WITHOUT THE WRITTEN APPROVAL OF THE ARCHITECT/ENGINEER.
4. FOR DEEP-RIB DECK, PROVIDE DOUBLE 2x BLOCKING UNDER CONCENTRATED LOAD.
5. FOR DLH JOISTS, INCREASE SIZE OF ADDITIONAL REINFORCING DIAGONALS TO L2½xL2½x¼.

11/S404 JOIST CONCENTRATED LOAD DETAIL
SCALE: NONE

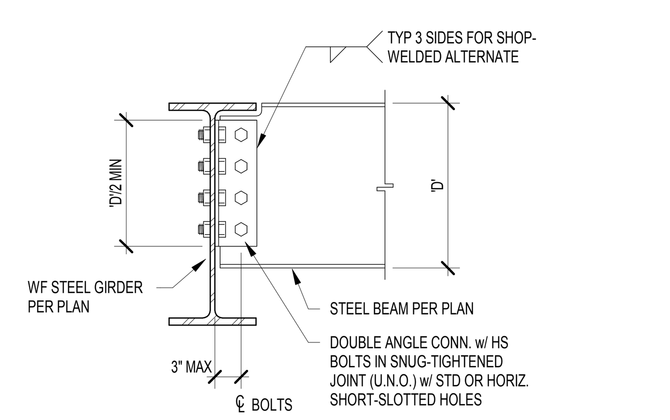

NOTE: DESIGN CONNECTION TO DEVELOP BEAM REACTION (REF. FRAMING PLANS AND STEEL CONNECTION NOTES ON S001)

12/S404 TYP. FRAMED BEAM CONNECTION
SCALE: NONE

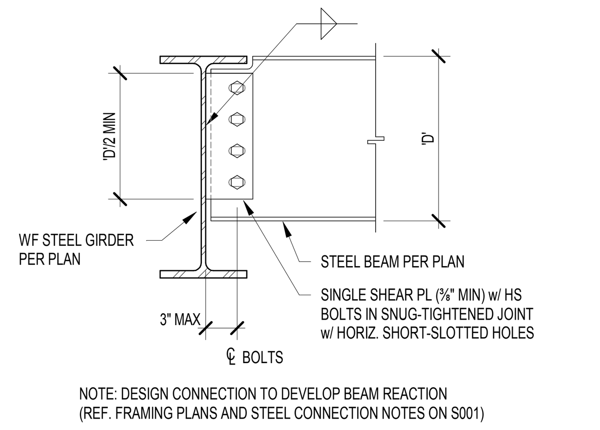

NOTE: DESIGN CONNECTION TO DEVELOP BEAM REACTION (REF. FRAMING PLANS AND STEEL CONNECTION NOTES ON S001)

13/S404 ALT. FRAMED BEAM CONNECTION
SCALE: NONE

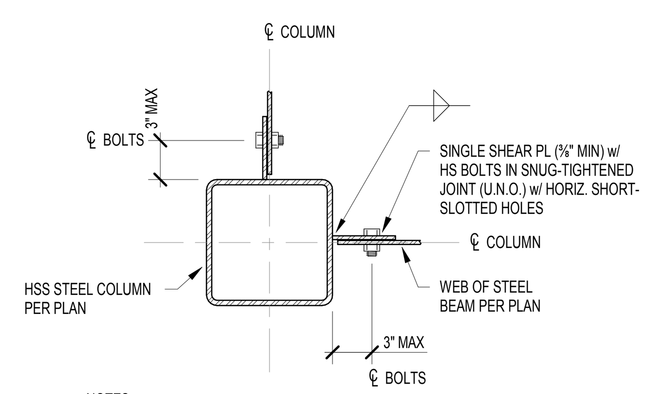

NOTES:

1. DESIGN CONNECTION TO DEVELOP BEAM REACTION (REF. FRAMING PLANS AND STEEL CONNECTION NOTES ON S001)
2. PROVIDE SHEAR PL AT LEAST ONE HALF THE DEPTH OF THE FRAMED BEAM.

14/S404 TYP. FRAMED BEAM TO HSS COL. CONNECTION - HSS FACE < 8"
SCALE: NONE

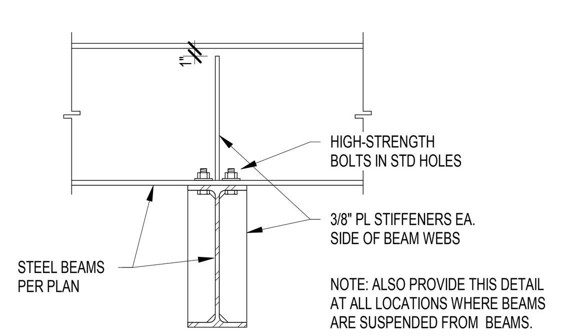

NOTE: ALSO PROVIDE THIS DETAIL AT ALL LOCATIONS WHERE BEAMS ARE SUSPENDED FROM BEAMS.

15/S404 BEAM BRG. ON BEAM DETAIL
SCALE: NONE

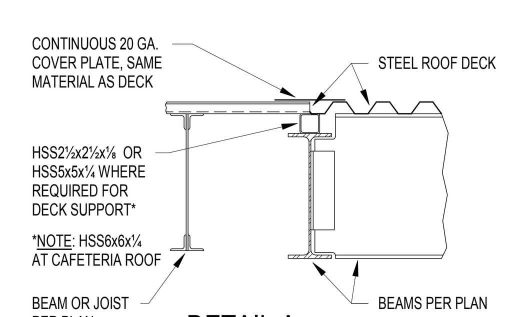

DETAIL A

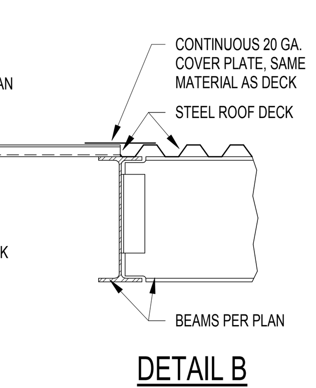

DETAIL B

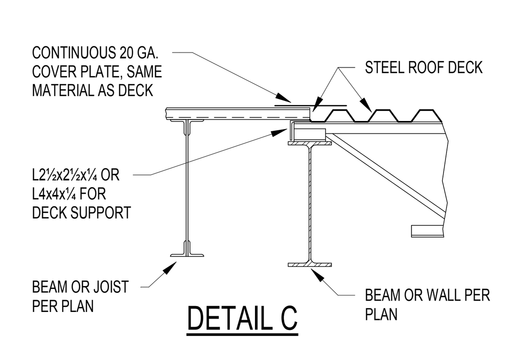

DETAIL C

17/S404 CHANGE OF ROOF DECK DIRECTION
SCALE: NONE

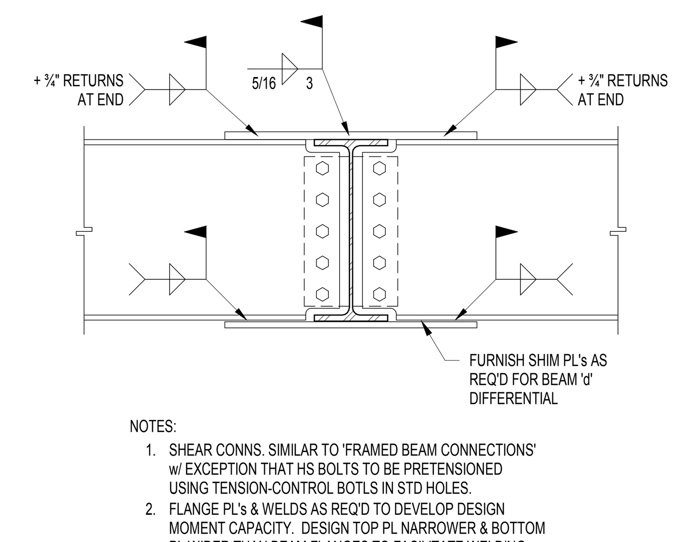

NOTES:

1. SHEAR CONNS. SIMILAR TO 'FRAMED BEAM CONNECTIONS' w/ EXCEPTION THAT HS BOLTS TO BE PRETENSIONED USING TENSION-CONTROL BOTLS IN STD HOLES.
2. FLANGE PL's & WELDS AS REQ'D TO DEVELOP DESIGN MOMENT CAPACITY. DESIGN TOP PL NARROWER & BOTTOM PL WIDER THAN BEAM FLANGES TO FACILITATE WELDING.

DETAIL A - BEAMS NOMINALLY SAME DEPTH

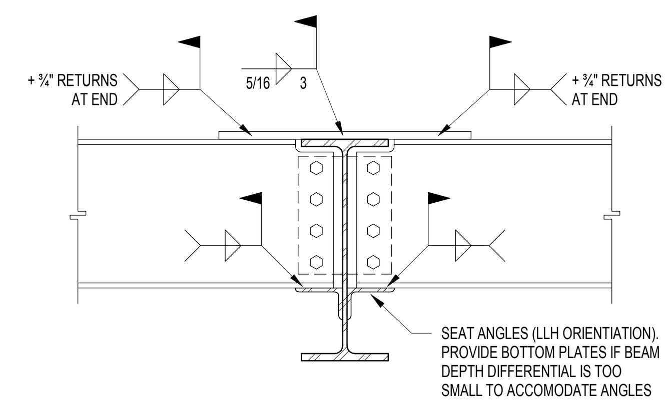

NOTES:

1. SHEAR CONNS. SIMILAR TO 'FRAMED BEAM CONNECTIONS' w/ EXCEPTION THAT HS BOLTS TO BE PRETENSIONED USING TENSION-CONTROL BOTLS IN STD HOLES.
2. FLANGE PL's, ANGLES & WELDS AS REQ'D TO DEVELOP DESIGN MOMENT CAPACITY. DESIGN TOP PL NARROWER & BOTTOM ANGLES/PLATES WIDER THAN BEAM FLANGE TO FACILITATE WELDING.

DETAIL B - BEAMS OF DIFFERENT DEPTH

18/S404 TYPICAL BEAM-TO-BEAM MOMENT CONNECTIONS
SCALE: NONE

MADE @ PLAINFIELD

CSO
8831 Keystone Crossing, Indianapolis, IN 46240
317.848.7800 | csoinc.net

© 2018 CSO Architects, Inc. All Rights Reserved

Lynch, Harrison & Brumleve, Inc.
550 Virginia Avenue
Indianapolis, IN 46203
P 317.423.1550
F 317.423.1551

PROJECT:

TOWN OF PLAINFIELD
MADE@ PLAINFIELD
Red Pride Drive, Plainfield, IN 46168

SCOPE DRAWINGS:
These drawings indicate the general scope of the project in terms of architectural design concept, the dimensions of the building, the major architectural elements and the type of structural, mechanical and electrical systems.
The drawings do not necessarily indicate or describe all work required for full performance and completion of the requirements of the Contract.
On the basis of the general scope indicated or described, the trade contractors shall furnish all items required for the proper execution and completion of the work.

REVISIONS:

ISSUE DATE	DRAWN BY	CHECKED BY
01/16/2020	JRV	PAB

DRAWING TITLE:
TYPICAL DETAILS

CERTIFIED BY:
MARK D. LaVIER REGISTERED PE19400114 STATE OF INDIANA PROFESSIONAL ENGINEER

DRAWING NUMBER
S404

PROJECT NUMBER
19004

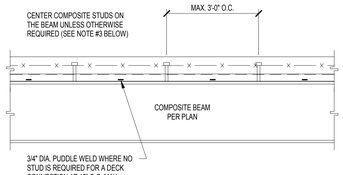

1. THE MIN. NUMBER OF STUDS FOR EACH BEAM IS SHOWN ON THE FRAMING PLAN.
2. SPACE STUDS AS EVENLY AS POSSIBLE IN AVAILABLE DECK FLUTES. WHERE STUD SPACING EXCEEDS THE MAX. SPACING ALLOWED, PROVIDE ADDITIONAL STUDS TO SATISFY THE SPACING REQUIREMENTS.
3. WHERE THE NUMBER OF STUDS EXCEEDS THE NUMBER OF FLUTES, PROVIDE TWO STUDS IN EVERY OTHER FLUTE, STARTING AT EACH END OF THE BEAM. THE TRANSVERSE SPACING BETWEEN TWO STUDS IN A SINGLE FLUTE SHALL BE 3", UNLESS NOTED OTHERWISE.
4. PLACE ANY NATURAL BEAM CAMBER UP.

1 / S405 COMPOSITE GIRDER CONSTRUCTION
SCALE: NONE

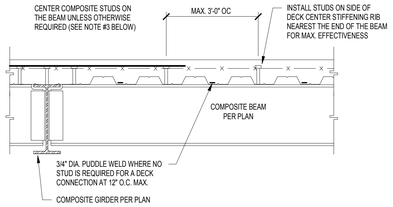

1. THE MIN. NUMBER OF STUDS FOR EACH BEAM IS SHOWN ON THE FRAMING PLAN.
2. SPACE STUDS AS EVENLY AS POSSIBLE IN AVAILABLE DECK FLUTES. WHERE STUD SPACING EXCEEDS THE MAX. SPACING ALLOWED, PROVIDE ADDITIONAL STUDS TO SATISFY THE SPACING REQUIREMENTS.
3. WHERE THE NUMBER OF STUDS EXCEEDS THE NUMBER OF FLUTES, PROVIDE TWO STUDS IN EVERY OTHER FLUTE, STARTING AT EACH END OF THE BEAM. THE TRANSVERSE SPACING BETWEEN TWO STUDS IN A SINGLE FLUTE SHALL BE 3", UNLESS NOTED OTHERWISE.
4. PLACE ANY NATURAL BEAM CAMBER UP.

2 / S405 COMPOSITE PURLIN CONSTRUCTION
SCALE: NONE

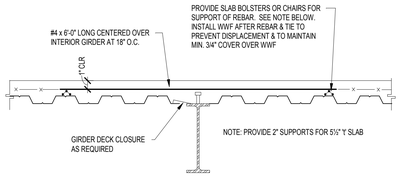

3 / S405 INTERIOR COMPOSITE GIRDER DETAIL
SCALE: NONE

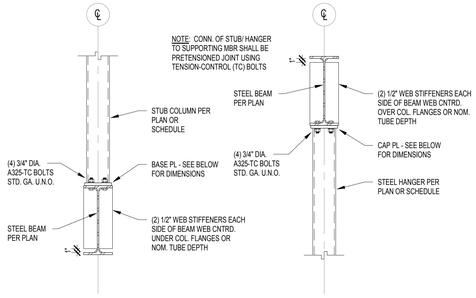

NOTES:
1. CAP PL 'T' ≥ LARGER OF COL. OR BEAM FLANGE/WALL THICKNESS, WITH MIN. 'T' = 1".
2. MIN. CAP PL LENGTH = COL. DEPTH + 4" UNLESS LONGER PL REQ'D FOR BEARING/CRIPPLING OR BOLT CLEARANCES.
3. MIN. CAP PL WIDTH = COL. WIDTH + 1" OR AS REQ'D FOR BOLT GA. + 3"
4. WHERE COLUMN DEPTH IS LESS THAN 8", REPLACE STIFFENER PLATES SHOWN WITH (1) STIFF. PL EA SIDE CENTERED ON COLUMN. PLATE MAY DOUBLE AS SHEAR PL WHERE SUPPORT OF A PERPENDICULAR BEAM IS REQUIRED.

4 / S405 STUB/HANGER COLUMN DETAILS
SCALE: NONE

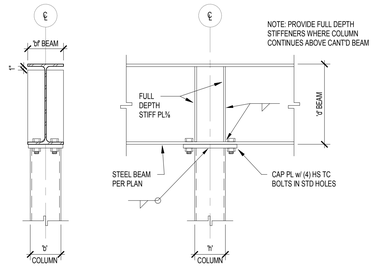

NOTES:
1. CAP PL 'T' ≥ LARGER OF COL. OR BEAM FLANGE/WALL THICKNESS, WITH MIN. 'T' = 1".
2. MIN. CAP PL LENGTH = COL. DEPTH + 6" UNLESS LONGER PL REQ'D FOR BEARING/CRIPPLING OR BOLT CLEARANCES.
3. MIN. CAP PL WIDTH = COL. WIDTH + 1" OR AS REQ'D FOR BOLT GA. + 3"
4. WHERE COLUMN DEPTH IS LESS THAN 8", REPLACE STIFFENER PLATES SHOWN WITH (1) STIFF. PL EA SIDE CENTERED ON COLUMN. PLATE MAY DOUBLE AS SHEAR PL WHERE SUPPORT OF A PERPENDICULAR BEAM IS REQUIRED.
5. WHERE COLUMN CONTINUES ABOVE BEAM, BASE PL ABOVE TO BE SIM. TO CAP PL BELOW.

5 / S405 CONTIN. BEAM OVER TOP OF COLUMN
SCALE: NONE

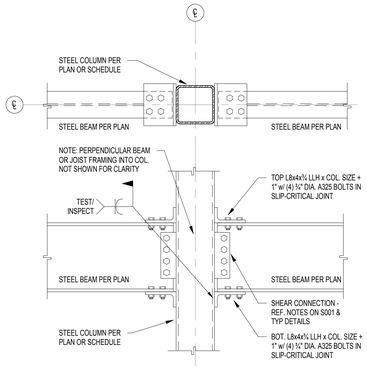

6 / S405 BEAM TO HSS COL. MOMENT CONNECTION
SCALE: 3/4" = 1'-0"

CSO
8831 Keystone Crossing, Indianapolis, IN 46240
317.848.7600 | csoinc.net

© 2019 CSO Architects, Inc. All Rights Reserved

Lynch, Harrison & Brumleve, Inc.
550 Virginia Avenue
Indianapolis, IN 46203
P 317.423.1550
F 317.423.1551

PROJECT:
TOWN OF PLAINFIELD
MADE@ PLAINFIELD
Red Pride Drive, Plainfield, IN 46168

SCOPE DRAWINGS:
These drawings indicate the general scope of the project in terms of architectural design concept, the dimensions of the building, the major architectural elements and the type and quantity of materials to be incorporated.
The drawings do not necessarily indicate or describe all work required for full performance and completion of the architectural and engineering.
On the basis of the general scope indicated or described, the trade contractors shall furnish all items required for the proper execution and completion of the work.

REVISIONS:
△

ISSUE DATE	DRAWN BY	CHECKED BY
01/16/2020	JRV	PAB

DRAWING TITLE:
TYPICAL DETAILS

CERTIFIED BY:
MARK D. LAWLER
REGISTERED
PE19400114
STATE OF INDIANA
PROFESSIONAL ENGINEER

DRAWING NUMBER
S405

PROJECT NUMBER
19004

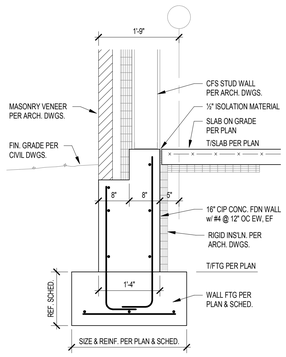

1 S701 SECTION
SCALE: 3/4" = 1'-0"

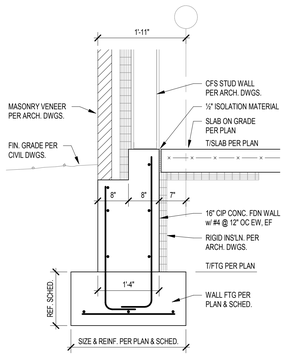

2 S701 SECTION
SCALE: 3/4" = 1'-0"

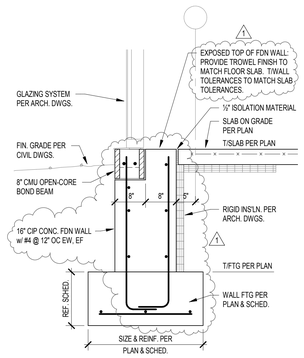

3 S701 SECTION
SCALE: 3/4" = 1'-0"

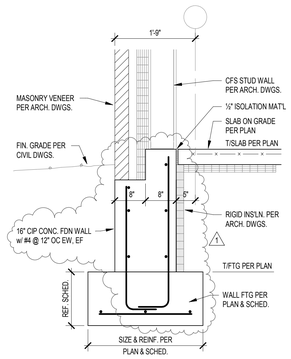

4 S701 SECTION
SCALE: 3/4" = 1'-0"

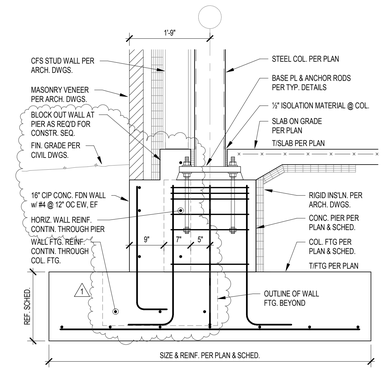

5 S701 SECTION
SCALE: 3/4" = 1'-0"

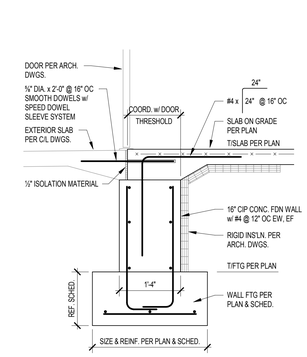

6 S701 SECTION
SCALE: 3/4" = 1'-0"

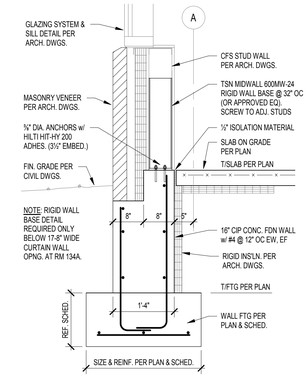

7 S701 SECTION
SCALE: 3/4" = 1'-0"

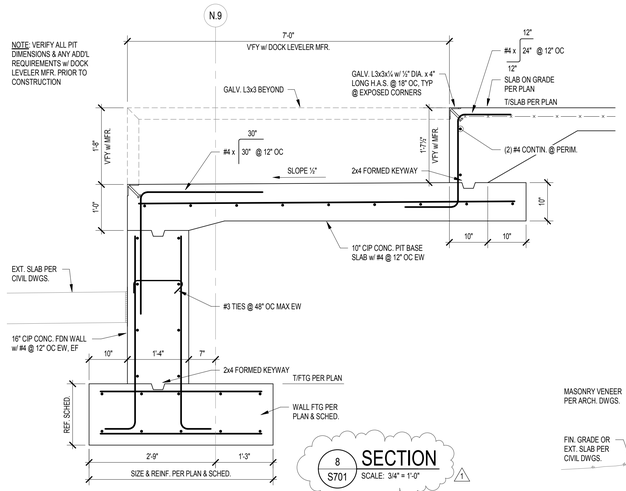

8 S701 SECTION
SCALE: 3/4" = 1'-0"

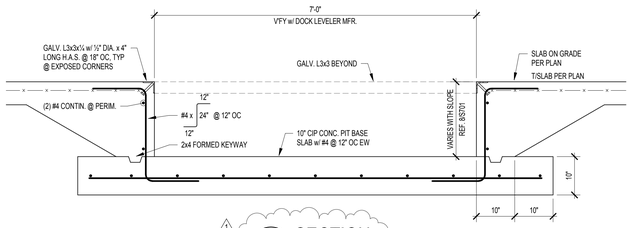

9 S701 SECTION
SCALE: 3/4" = 1'-0"

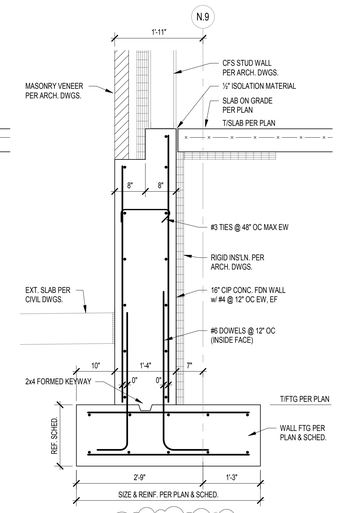

10 S701 SECTION
SCALE: 3/4" = 1'-0"

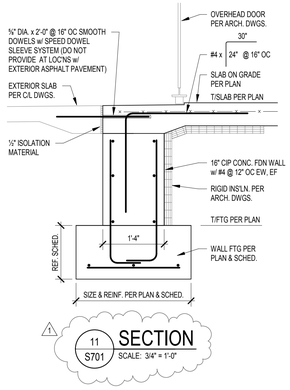

11 S701 SECTION
SCALE: 3/4" = 1'-0"

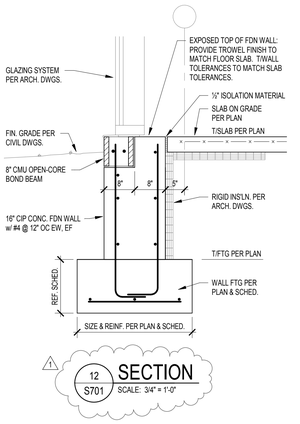

12 S701 SECTION
SCALE: 3/4" = 1'-0"

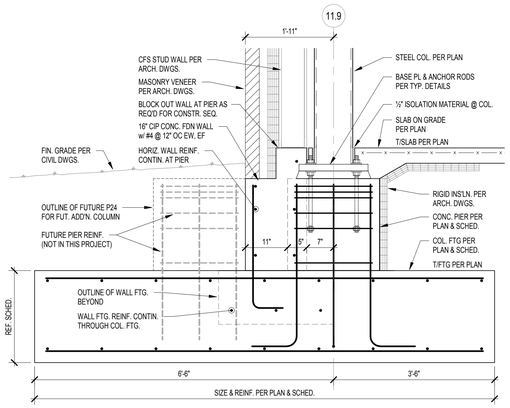

13 S701 SECTION
SCALE: 3/4" = 1'-0"

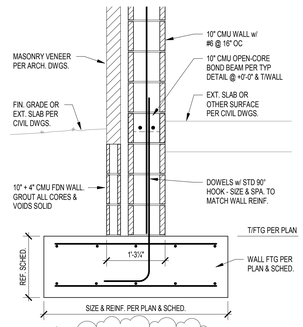

14 S701 SECTION
SCALE: 3/4" = 1'-0"

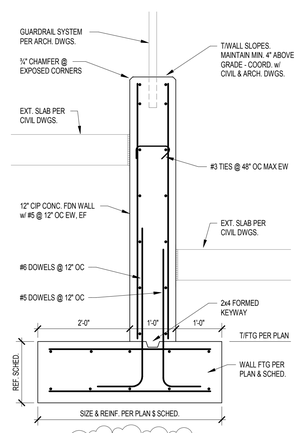

15 S701 SECTION
SCALE: 3/4" = 1'-0"

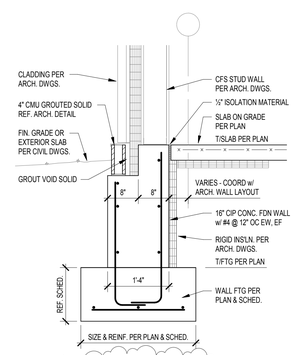

16 S701 SECTION
SCALE: 3/4" = 1'-0"

MADE @ PLAINFIELD

CSO
8831 Keystone Crossing, Indianapolis, IN 46240
317.848.7600 | csoinc.net
© 2019 CSO Architects, Inc. All Rights Reserved

Lynch, Harrison & Brumleve, Inc.
P 317.423.1550
F 317.423.1551
550 Virginia Avenue
Indianapolis, IN 46203

PROJECT:
TOWN OF PLAINFIELD
MADE@ PLAINFIELD
Red Pride Drive, Plainfield, IN 46168

SCOPE DRAWINGS:
These drawings indicate the general scope of the project in terms of architectural design concept, the dimensions of the building, the major architectural elements and the type of construction and finishes to be provided.
The drawings do not necessarily indicate or describe all work required for full performance and completion of the requirements of the Contract.
On the basis of the general scope indicated or described, the Contractor shall provide all labor and materials required for the proper execution and completion of the work.

REVISIONS:

1	ADDENDUM 1	2020-01-30

ISSUE DATE	DRAWN BY	CHECKED BY
01/16/2020	JRV	PAB

DRAWING TITLE:
FOUNDATION SECTIONS & DETAILS

CERTIFIED BY:
MARK D. LAVELLE REGISTERED PE19400114 STATE OF INDIANA PROFESSIONAL ENGINEER

DRAWING NUMBER
S701

PROJECT NUMBER
19004

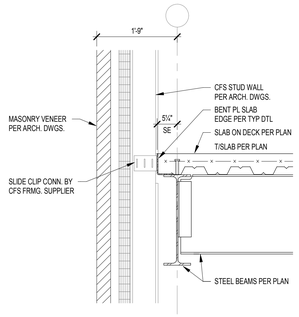

1 S711 SECTION
SCALE: 3/4" = 1'-0"

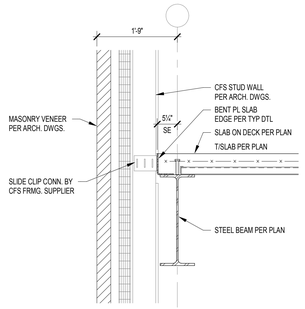

2 S711 SECTION
SCALE: 3/4" = 1'-0"

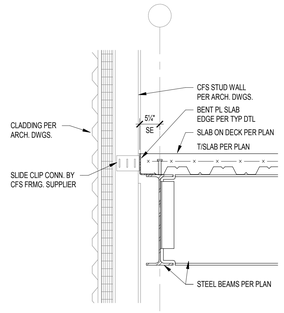

3 S711 SECTION
SCALE: 3/4" = 1'-0"

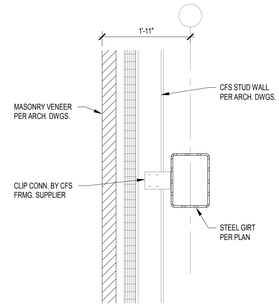

4 S711 SECTION
SCALE: 3/4" = 1'-0"

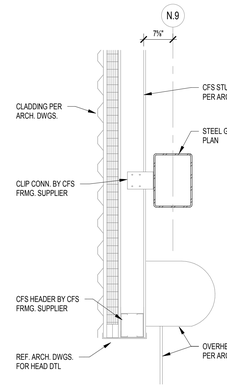

5 S711 SECTION
SCALE: 3/4" = 1'-0"

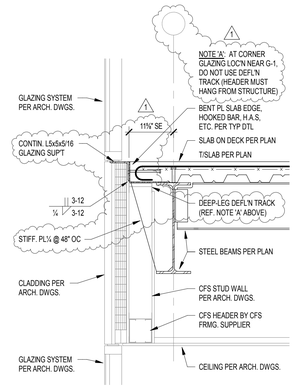

6 S711 SECTION
SCALE: 3/4" = 1'-0"

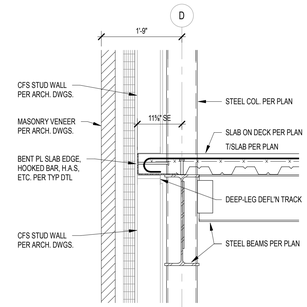

7 S711 SECTION
SCALE: 3/4" = 1'-0"

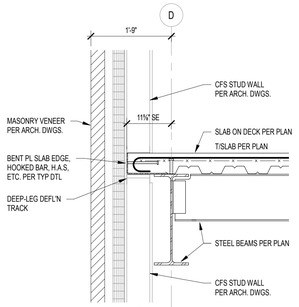

8 S711 SECTION
SCALE: 3/4" = 1'-0"

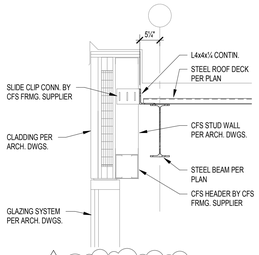

9 S711 SECTION
SCALE: 3/4" = 1'-0"

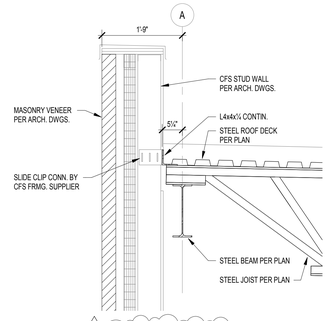

10 S711 SECTION
SCALE: 3/4" = 1'-0"

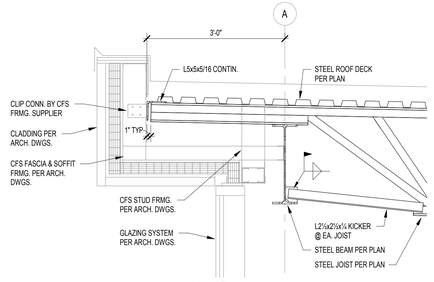

11 S711 SECTION
SCALE: 3/4" = 1'-0"

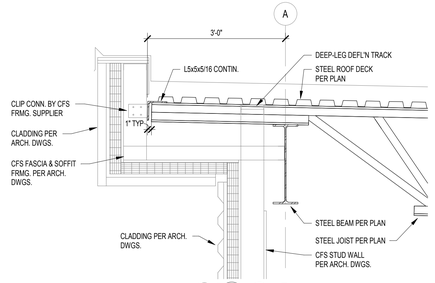

12 S711 SECTION
SCALE: 3/4" = 1'-0"

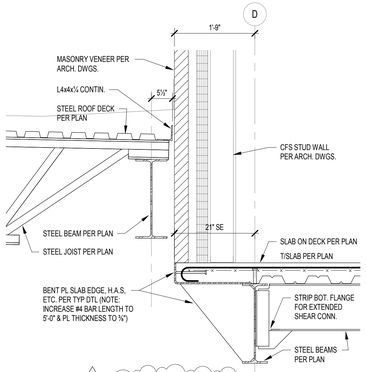

13 S711 SECTION
SCALE: 3/4" = 1'-0"

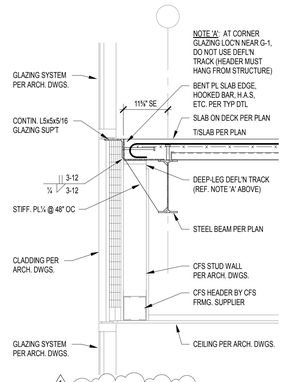

14 S711 SECTION
SCALE: 3/4" = 1'-0"

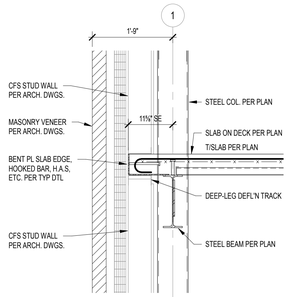

15 S711 SECTION
SCALE: 3/4" = 1'-0"

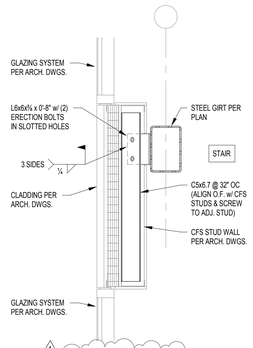

16 S711 SECTION
SCALE: 3/4" = 1'-0"

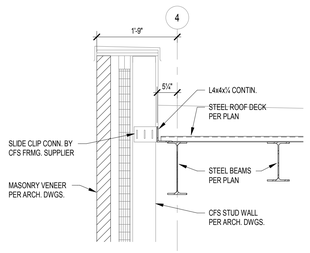

17 S711 SECTION
SCALE: 3/4" = 1'-0"

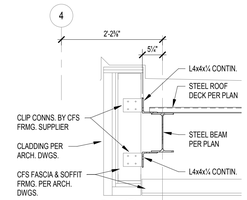

18 S711 SECTION
SCALE: 3/4" = 1'-0"

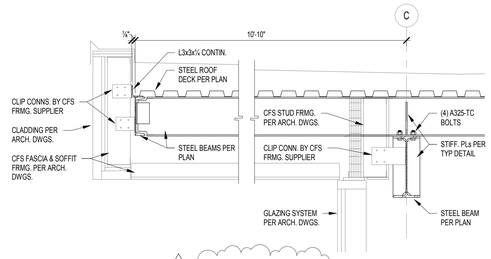

19 S711 SECTION
SCALE: 3/4" = 1'-0"

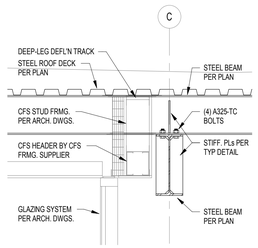

20 S711 SECTION
SCALE: 3/4" = 1'-0"

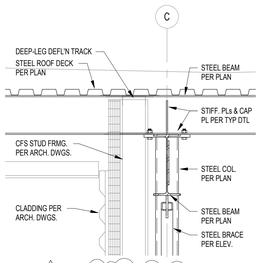

21 S711 SECTION
SCALE: 3/4" = 1'-0"

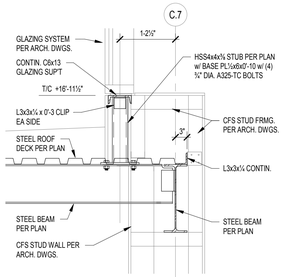

22 S711 SECTION
SCALE: 3/4" = 1'-0"

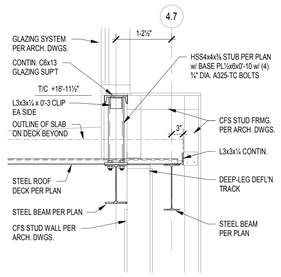

23 S711 SECTION
SCALE: 3/4" = 1'-0"

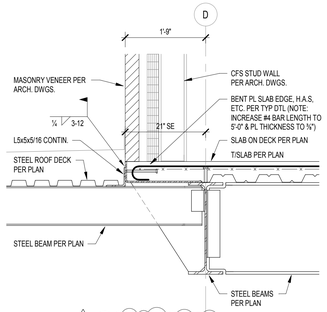

24 S711 SECTION
SCALE: 3/4" = 1'-0"

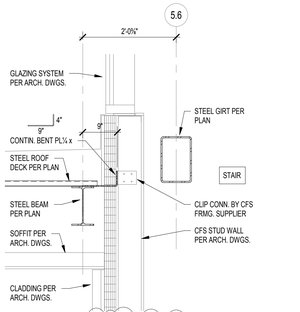

25 S711 SECTION
SCALE: 3/4" = 1'-0"

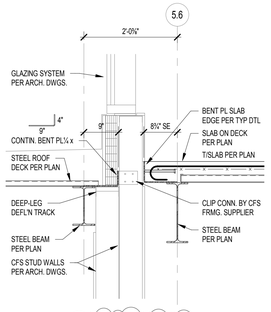

26 S711 SECTION
SCALE: 3/4" = 1'-0"

MADE @ PLAINFIELD

CSO
8831 Keystone Crossing, Indianapolis, IN 46240
317.848.7600 | csoinc.net
© 2019 CSO Architects, Inc. All Rights Reserved

Lynch, Harrison & Brumleye, Inc.
P 317.423.1550
F 317.423.1551
550 Virginia Avenue
Indianapolis, IN 46203

PROJECT:
TOWN OF PLAINFIELD
MADE@ PLAINFIELD
Red Pride Drive, Plainfield, IN 46168

SCOPE DRAWINGS:
These drawings indicate the general scope of the project in terms of architectural design concept, the dimensions of the building, the major architectural elements and the type of construction and finishes to be provided.
The drawings do not necessarily indicate or describe all work required for full performance and completion of the construction of the project.
On the basis of the general scope indicated or described, the trade contractors shall furnish all items required for the proper execution and completion of the work.

REVISIONS:

1	ADDENDUM 1	2020-01-30

ISSUE DATE	DRAWN BY	CHECKED BY
01/16/2020	JRV	PAB

DRAWING TITLE:
FRAMING SECTIONS & DETAILS

CERTIFIED BY:
MARK D. LAWLER
REGISTERED
PE19400114
STATE OF INDIANA
PROFESSIONAL ENGINEER

DRAWING NUMBER
S711

PROJECT NUMBER
19004

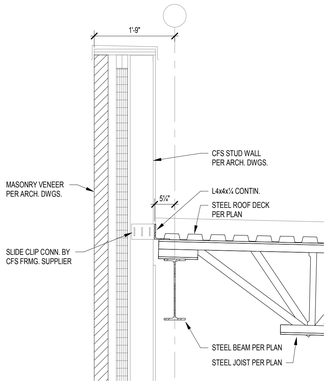

1 S721 SECTION
SCALE: 3/4" = 1'-0"

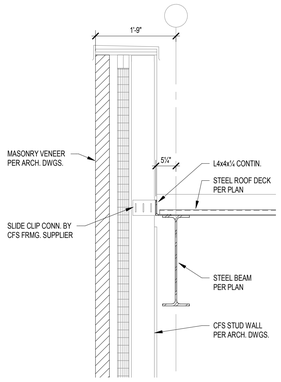

2 S721 SECTION
SCALE: 3/4" = 1'-0"

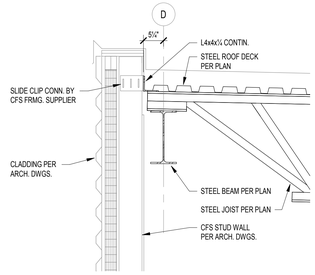

3 S721 SECTION
SCALE: 3/4" = 1'-0"

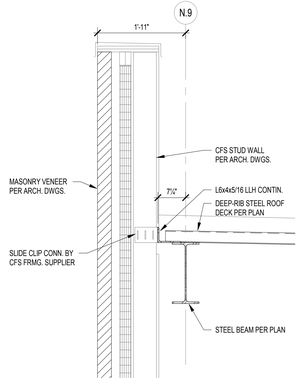

4 S721 SECTION
SCALE: 3/4" = 1'-0"

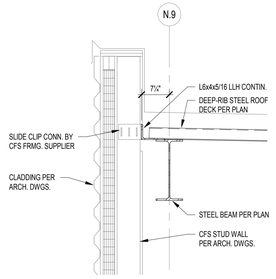

5 S721 SECTION
SCALE: 3/4" = 1'-0"

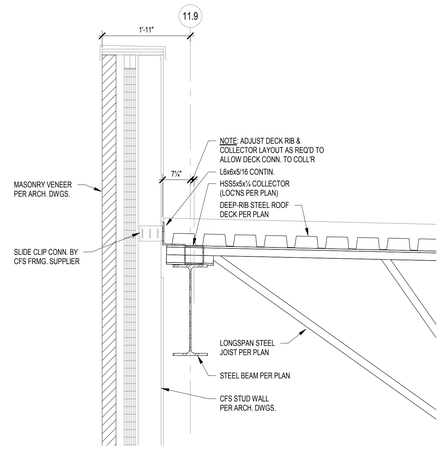

6 S721 SECTION
SCALE: 3/4" = 1'-0"

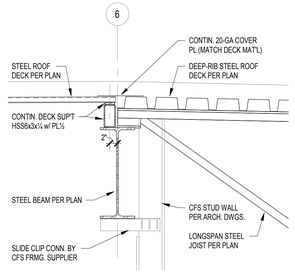

7 S721 SECTION
SCALE: 3/4" = 1'-0"

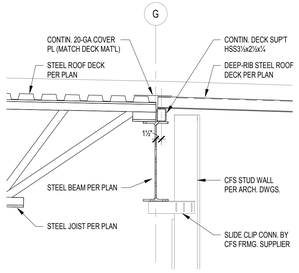

8 S721 SECTION
SCALE: 3/4" = 1'-0"

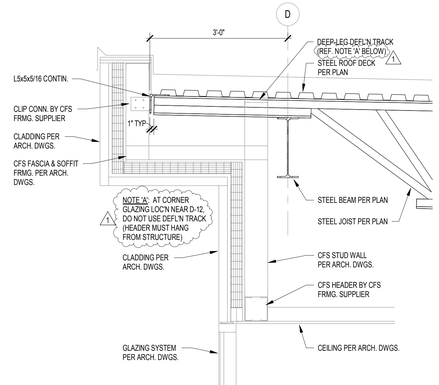

9 S721 SECTION
SCALE: 3/4" = 1'-0"

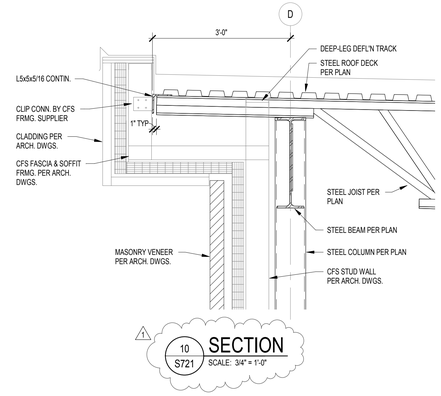

10 S721 SECTION
SCALE: 3/4" = 1'-0"

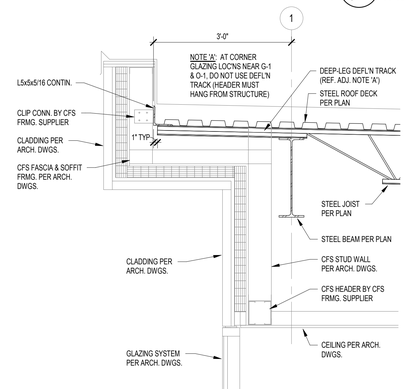

11 S721 SECTION
SCALE: 3/4" = 1'-0"

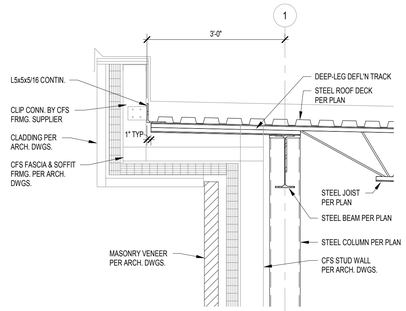

12 S721 SECTION
SCALE: 3/4" = 1'-0"

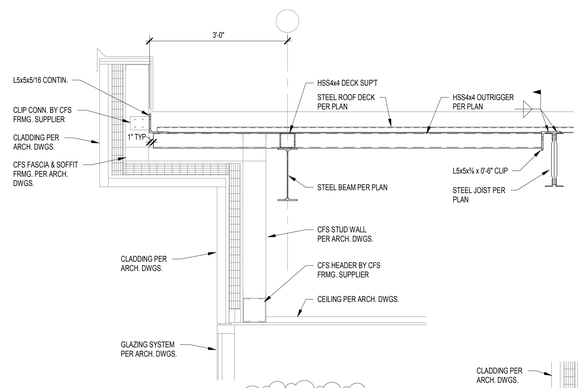

13 S721 SECTION
SCALE: 3/4" = 1'-0"

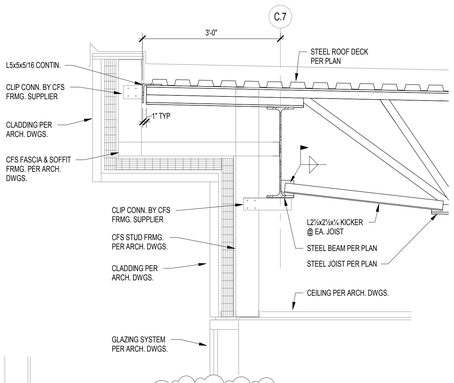

14 S721 SECTION
SCALE: 3/4" = 1'-0"

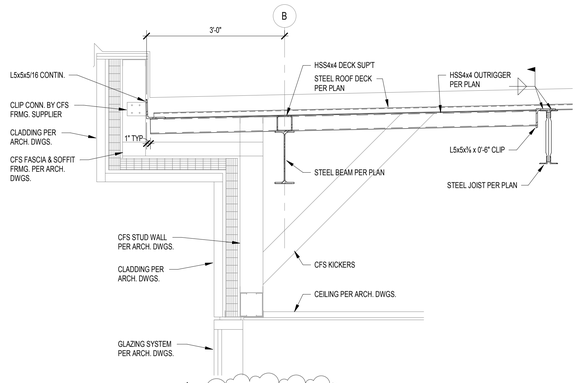

15 S721 SECTION
SCALE: 3/4" = 1'-0"

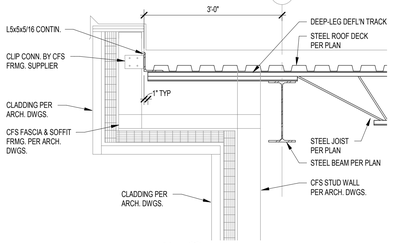

16 S721 SECTION
SCALE: 3/4" = 1'-0"

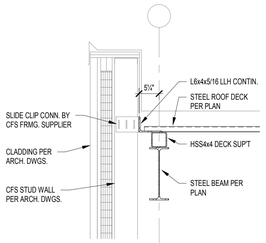

17 S721 SECTION
SCALE: 3/4" = 1'-0"

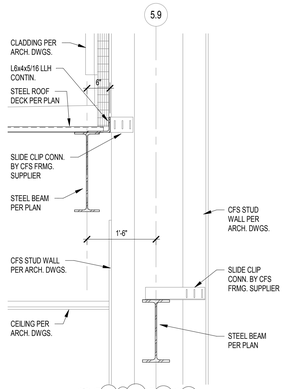

18 S721 SECTION
SCALE: 3/4" = 1'-0"

MADE @ PLAINFIELD

CSO
8831 Keystone Crossing, Indianapolis, IN 46240
317.848.7600 | csoinc.net
© 2019 CSO Architects, Inc. All Rights Reserved

Lynch, Harrison & Brumleve, Inc.
P 317.423.1550
F 317.423.1551
550 Virginia Avenue
Indianapolis, IN 46203

PROJECT:
TOWN OF PLAINFIELD
MADE@ PLAINFIELD
Red Pride Drive, Plainfield, IN 46168

SCOPE DRAWINGS:
These drawings indicate the general scope of the project in terms of architectural design concept, the dimensions of the building, the major architectural elements and the type of construction and finishes to be provided.
The drawings do not necessarily indicate or describe all work required for full performance and completion of the contract by the trades.
On the basis of the general scope indicated or described, the trade contractors shall furnish all items required for the proper execution and completion of the work.

REVISIONS:

1	ADDENDUM 1	2020-01-30

ISSUE DATE	DRAWN BY	CHECKED BY
01/16/2020	JRV	PAB

DRAWING TITLE:
FRAMING SECTIONS & DETAILS

CERTIFIED BY:
MARK D. LAVELLE
REGISTERED
PE19400114
STATE OF INDIANA
PROFESSIONAL ENGINEER

DRAWING NUMBER
S721

PROJECT NUMBER
19004

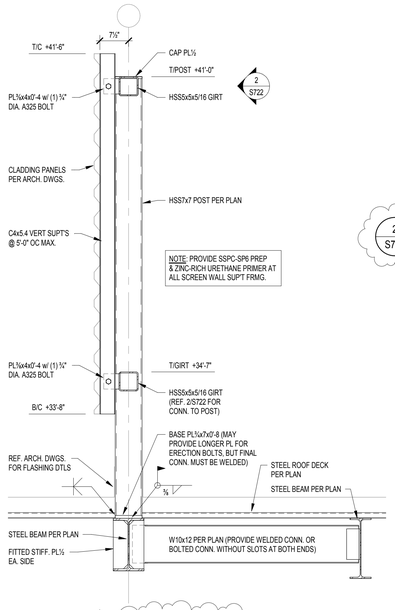

1 SECTION
1 S722 SCALE: 3/4" = 1'-0"

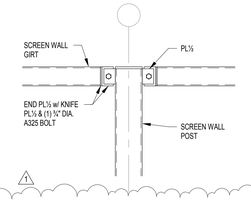

2 TYP. SCREEN GIRT CONN. DETAIL
2 S722 SCALE: 3/4" = 1'-0"

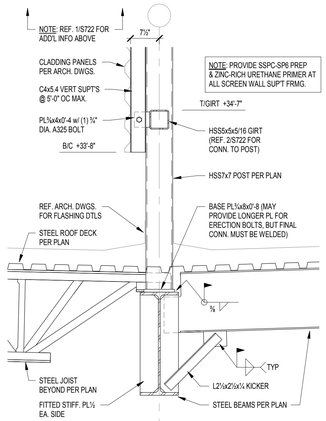

3 SECTION
3 S722 SCALE: 3/4" = 1'-0"

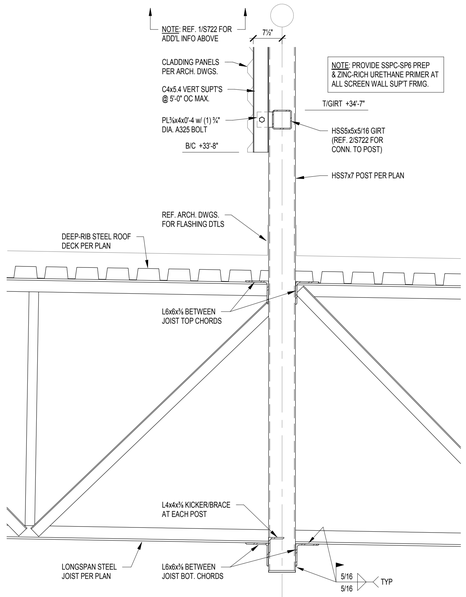

4 SECTION
4 S722 SCALE: 3/4" = 1'-0"

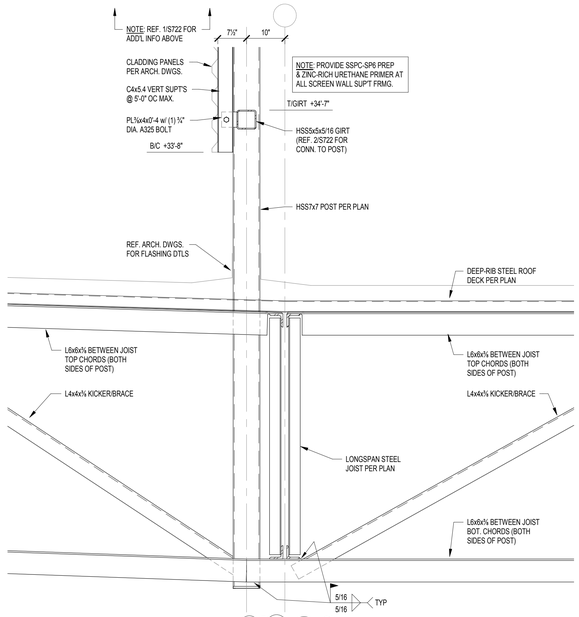

5 SECTION
5 S722 SCALE: 3/4" = 1'-0"

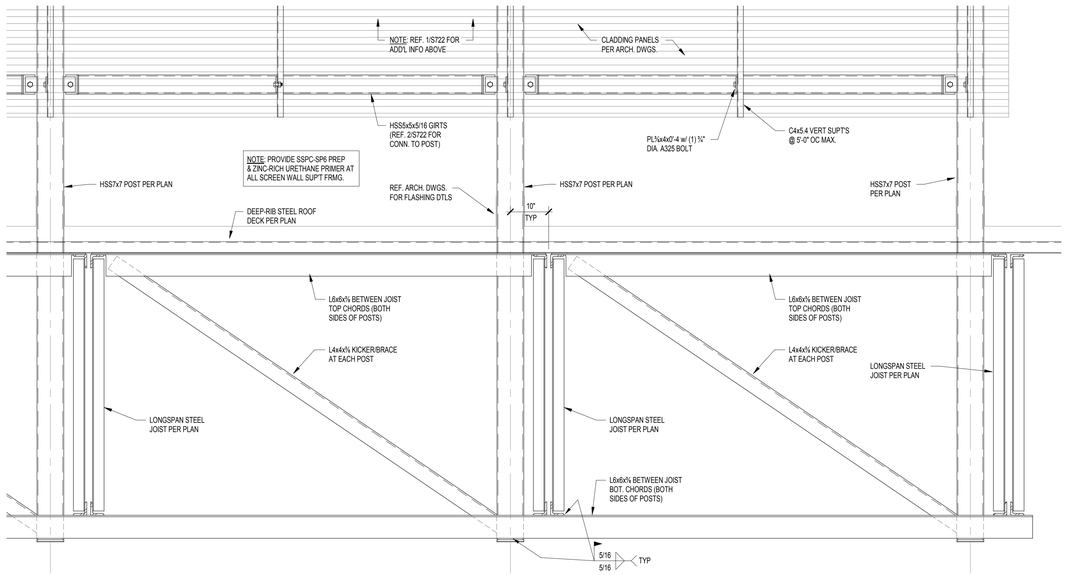

6 SECTION
6 S722 SCALE: 3/4" = 1'-0"

MADE @ PLAINFIELD

CSO
8831 Keystone Crossing, Indianapolis, IN 46240
317.848.7600 | csoinc.net
© 2019 CSO Architects, Inc. All Rights Reserved

Lynch, Harrison & Brumleve, Inc.
P 317.423.1550
F 317.423.1551
550 Virginia Avenue
Indianapolis, IN 46203

PROJECT:
TOWN OF PLAINFIELD
MADE@ PLAINFIELD
Red Pride Drive, Plainfield, IN 46168

SCOPE DRAWINGS:
These drawings indicate the general scope of the project in terms of architectural design concept, the dimensions of the building, the general arrangement of spaces and the type of structural, mechanical and electrical systems.
The drawings do not necessarily indicate or describe all work required for the complete performance and completion of the requirements of the Contract.
On the basis of the general scope indicated or described, the trade contractors shall furnish all items required for the proper execution and completion of the work.

REVISIONS:

1	ADDENDUM 1	2020-01-30

ISSUE DATE	DRAWN BY	CHECKED BY
01/30/2020	JRV	PAB

DRAWING TITLE:
FRAMING SECTIONS & DETAILS

CERTIFIED BY:
MARK D. LAFLEN
REGISTERED
PE19400014
STATE OF INDIANA
PROFESSIONAL ENGINEER

DRAWING NUMBER
S722

PROJECT NUMBER
19004

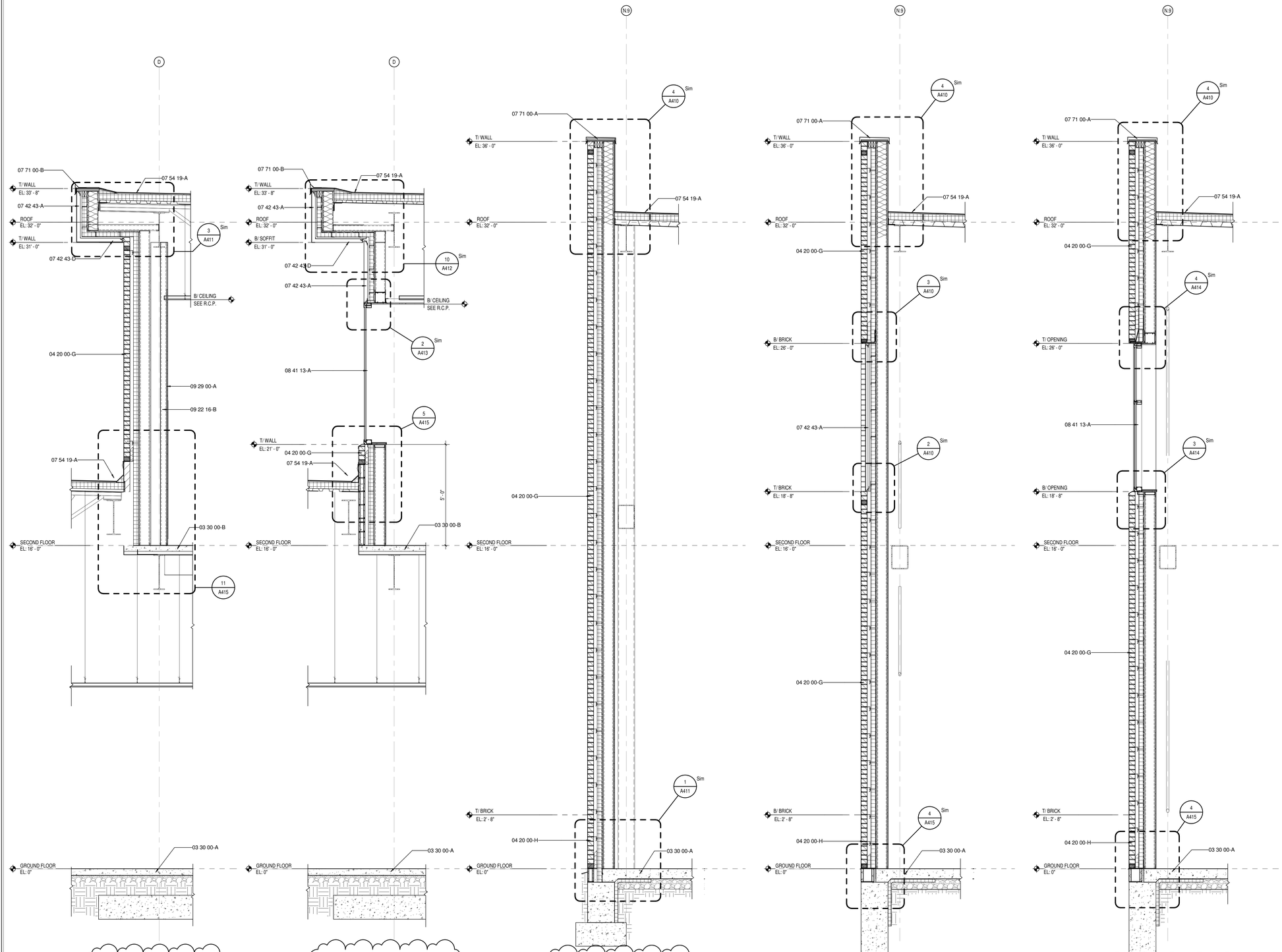

KEYNOTE LEGEND

03 30 00-A	CONCRETE SLAB OVER VAPOR BARRIER ON DRAINAGE FILL. SEE STRUCTURAL
03 30 00-B	CONCRETE SLAB ON METAL DECK- SEE STRUCTURAL
03 30 00-D	CONCRETE FOOTING- SEE STRUCTURAL
03 30 00-F	1/2" EXPANSION MATERIAL
04 20 00-A	GROUT SOLID
04 20 00-B	ADJUSTIBLE MASONRY VENEER ANCHOR AT 16" O.C. VERTICALLY
04 20 00-D	WEEP HOLES AT 16" O.C.
04 20 00-F	CAVITY DRAINAGE MATERIAL
04 20 00-G	BRICK TYPE 1
04 20 00-H	BRICK TYPE 2 (ACCENT)
04 20 00-I	CONCRETE MASONRY UNIT
04 20 00-J	BOND BEAM MASONRY UNIT
04 20 00-K	GROUND FACE CONCRETE MASONRY UNIT
05 12 00-A	STRUCTURAL STEEL FRAMING MEMBER- SEE STRUCTURAL
05 21 00-A	STEEL JOIST- SEE STRUCTURAL
05 21 00-B	STEEL JOIST GIRDER- SEE STRUCTURAL
05 31 00-A	METAL ROOF DECKING- SEE STRUCTURAL
05 31 00-B	METAL FLOOR DECKING- SEE STRUCTURAL
05 31 00-C	METAL DECK CLOSURE
05 40 00-B	3 5/8" 16 GA. MIN GALVANIZED STEEL STUD
05 40 00-D	6" 16 GA. MIN GALVANIZED STEEL STUD
05 40 00-G	12" 14 GA. MIN GALVANIZED STEEL STUD TRACK
05 50 00-A	MISCELLANEOUS STEEL - SEE STRUCTURAL
05 50 00-C	PAINTED STEEL BRICK LINTEL
05 50 00-D	STEEL SHELF ANGLE- SEE STRUCTURAL
05 51 00-A	CONCRETE FILLED METAL PAN TREAD AND RISER
05 51 00-B	STAIR METAL STRINGER- TUBE
05 51 00-C	STEEL TUBE LANDING SUPPORT
05 51 00-D	CONCRETE FILLED METAL PAN STAIR LANDING (SEALED)
05 51 00-E	PRECAST POLISHED CONCRETE TREAD (FINISH TO MATCH PC1 SEE A800 SERIES)
05 51 00-F	PRECAST POLISHED CONCRETE STAIR LANDING (FINISH TO MATCH PC1 SEE A800 SERIES)
05 52 13-A	1-1/4" I.D. STAINLESS STEEL PIPE RAILING
05 73 00-A	1-1/4" I.D. STAINLESS STEEL HANDRAIL
05 73 00-B	STAINLESS STEEL HANDRAIL BRACKET
05 73 00-C	STAINLESS STEEL CAP RAIL
05 73 00-D	CORE DRILL AND SET RAILING POST W/NON-SHRINK, NON-METALLIC GROUT
05 73 00-E	1/2" O.D. PAINTED STEEL BALUSTER
05 73 00-F	3/4" X 2" PAINTED STEEL POST
05 73 00-G	2" X 3" POST COVER FLANGE
06 10 53-A	1X WOOD BLOCKING
06 10 53-B	2X WOOD BLOCKING
06 16 00-A	3/4" EXTERIOR GRADE PLYWOOD
06 16 00-B	5/8" EXTERIOR GRADE PLYWOOD
06 16 43-A	5/8" EXTERIOR GYPSUM SHEATHING
06 40 00-A	SOLID PLASTIC SURFACE - 1/2" WINDOW STOOL
07 21 00-A	SLAB PERIMETER RIGID INSULATION (R-15 FOR 24" HORZ. & VERT.)
07 21 00-B	PACK FULL WITH MINERAL WOOL BATT INSULATION
07 21 00-C	3" CAVITY WALL EXTRUDED POLYSTYRENE INSULATION (R-16.8)
07 21 00-D	THERMALLY BROKEN Z-CLIPS @ 16" O.C. VERTICALLY
07 21 00-E	SPRAY APPLIED THERMAL INSULATION (R-20)
07 21 00-F	MINERAL WOOL BATT INSULATION
07 24 15-A	DIRECT APPLIED FINISH SYSTEM (DAFS)- UN-INSULATED SOFFIT
07 25 00-A	WEATHER RESISTIVE BARRIERS- BUILDING WRAP
07 27 26-A	FLUID APPLIED MEMBRANE AIR BARRIER
07 42 13-A	PRE-FINISHED METAL WALL PANEL
07 42 13-B	FLASHING
07 42 13-C	TRIM
07 42 43-A	COMPOSITE METAL WALL PANEL
07 42 43-B	HAT CHANNEL - SEE SECTIONS FOR DEPTH
07 42 43-D	COMPOSITE METAL SOFFIT
07 54 19-A	POLYVINYL-CHLORIDE MEMBRANE (PVC) ROOFING SYSTEM
07 54 19-B	MEMBRANE ROOFING - EXTEND OVER AND ATTACH TO FRONT FACE OF PARAPET
07 54 19-C	2 LAYERS OF 2" POLYISO INSULATION BOARD (R-26)
07 54 19-D	1/2" COVER BOARD
07 54 19-E	TAPERED POLYISO INSULATION BOARD
07 71 00-A	MANUFACTURED COPING
07 71 00-B	MANUFACTURED GRAVEL STOP
07 92 00-A	BACKER ROD AND SEALANT
07 92 00-B	SEALANT EACH SIDE, TYPICAL
07 92 00-C	SEALANT
07 92 00-D	BACKER ROD AND SEALANT EACH SIDE, TYPICAL
08 11 13-A	HOLLOW METAL DOOR
08 11 13-B	HOLLOW METAL DOOR/BORROWED LIGHT FRAME
08 14 16-A	FLUSH WOOD DOOR
08 33 23-A	OVERHEAD COILING DOOR
08 41 13-A	4 1/2" ALUMINUM-FRAMED STOREFRONT
08 41 13-B	ALUMINUM ENTRANCE DOOR
08 41 13-C	ALUMINUM BRAKE METAL TO MATCH STOREFRONT FRAME
08 44 13-A	7 1/2" DEEP ALUMINUM CURTAINWALL SYSTEM
08 44 13-B	CURTAINWALL ATTACHMENT MEMBER, ALLOW FOR THERMAL MOVEMENT
08 80 00-A	GLAZING - SEE SCHEDULE/ELEVATIONS
09 22 16-A	7/8" FURRING CHANNEL
09 22 16-B	3 5/8" STEEL STUD
09 22 16-C	6" STEEL STUD
09 22 16-E	METAL STUD KICKERS AS REQUIRED
09 22 16-F	10" STEEL STUD
09 29 00-A	5/8" GYPSUM WALL BOARD (SEE SPECS FOR TYPE)
09 29 00-C	SUSPENDED GYPSUM BOARD CEILING ASSEMBLY
09 29 00-D	METAL J- MOULD
09 51 13-A	ACOUSTICAL CEILING SUSPENSION ASSEMBLY
31 20 00-A	FINISH GRADE- SEE CIVIL SHEETS
32 13 13-A	SIDEWALK- SEE CIVIL SHEETS

CSO
8831 Keystone Crossing, Indianapolis, IN 46240
317.848.7600 | csoinc.net
© 2018 CSO Architects, Inc. All Rights Reserved

PROJECT:
TOWN OF PLAINFIELD
MADE@ PLAINFIELD
Red Pride Drive, Plainfield, IN 46168

SCOPE DRAWINGS:
These drawings indicate the general scope of the project in terms of architectural design concept, the dimensions of the building, the type of construction and the type of structural, mechanical and electrical systems.
The drawings do not necessarily indicate or describe all work required for full performance and completion of the requirements of the Contract.
In the case of any additional scope indicated or described, the trade contractors shall furnish all items required for the proper execution and completion of the work.

REVISIONS:
1 BP #1 ADD. #1 01-30-20

ISSUE DATE	DRAWN BY	CHECKED BY
01/30/20	BSN	JRF

DRAWING TITLE:
WALL SECTIONS

CERTIFIED BY:
BID PACK 1
NOT FOR CONSTRUCTION

DRAWING NUMBER
A407

PROJECT NUMBER
19004

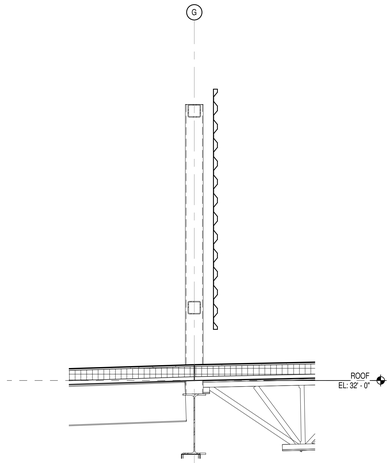

2 A205 SCREEN WALL SECTION
SCALE: 1/2" = 1'-0"

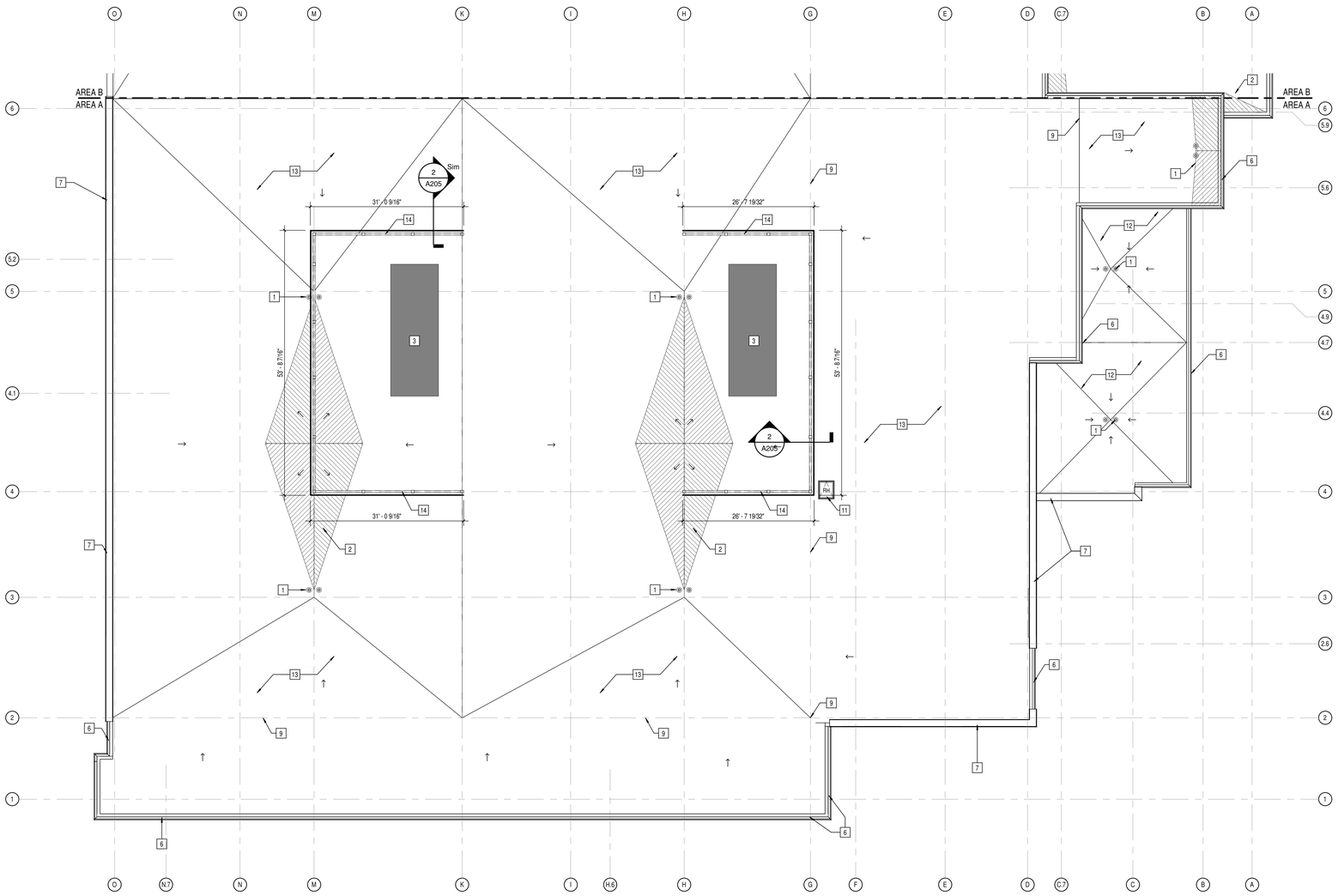

1 A205 PARTIAL ROOF PLAN - AREA A
SCALE: 3/32" = 1'-0"

NORTH

ROOF ABBREVIATIONS

DR	DUCT THRU ROOF
DS	METAL DOWNSPOUT
EF	EXHAUST FAN; SEE MECHANICAL
EJ	EXPANSION JOINT
FS	FLUE STACK; SEE MECHANICAL
GU	METAL GUTTER
PV	PLUMBING VENT
RAV	RELIEF AIR VENT; SEE MECHANICAL
RH	ROOF HATCH

GENERAL ROOF NOTES

1. ALL WORK SHALL BE IN ACCORDANCE WITH THE BEST QUALITY STANDARDS OF THE TRADE, AND SHALL CONFORM WITH THE LATEST EDITION OF ALL FEDERAL, STATE, AND LOCAL CODES AND STANDARDS. THE SAME ARE MADE A PART OF THESE CONTRACT DOCUMENTS, AS IF REPEATED HEREIN.
2. CONTRACT DOCUMENTS CONSIST OF BOTH THE PROJECT MANUAL AND DRAWINGS, AND BOTH ARE INTENDED TO BE COMPLEMENTARY. ANYTHING APPEARING ON EITHER MUST BE EXECUTED THE SAME AS IF SHOWN ON BOTH.
3. CONSTRUCTION DOCUMENTS SHALL BE FOLLOWED AS CLOSELY AS POSSIBLE, HOWEVER, SYSTEMS HAVE BEEN SHOWN DIAGRAMMATICALLY AND IN SOME CASES, ENLARGED FOR CLARITY. PROVIDE ADDITIONAL ITEMS AS REQUIRED TO PROVIDE A COMPLETE AND COORDINATED SYSTEM.
4. CONITRACTOR SHALL PROVIDE ANY AND ALL TEMPORARY UTILITY SERVICE REQUIRED TO CONSTRUCT THE WORK. CONTRACTOR MAY EXTEND SERVICES FROM EXISTING LOCATIONS TO WHERE THEY ARE REQUIRED. REMOVE TEMPORARY UTILITIES AND RELATED EXTENSIONS AS SOON AS PRACTICABLE. RESTORE ALL AFFECTED AREAS TO ORIGINAL CONDITION.
5. CONTRACTOR SHALL REMOVE CONSTRUCTION DEBRIS FROM THE BUILDING AND ROOF DAILY.
6. STORE VOLATILE OR FLAMMABLE LIQUIDS IN UL LISTED FIRE CABINETS.
7. CONTRACTOR SHALL BE SOLELY RESPONSIBLE FOR THE SECURITY OF ALL STORED MATERIALS AND EQUIPMENT INSIDE OR OUTSIDE THE BUILDING.
8. CONTRACTOR SHALL FURNISH NECESSARY TEMPORARY PROTECTION FROM WEATHER TO PROTECT INTERIOR OF BUILDING FROM ELEMENTS OF WEATHER AT ALL TIMES.
9. CONTRACTOR RESPONSIBLE FOR TRAFFIC PROTECTION DURING CONSTRUCTION. AREAS OF WORK SUBJECTED TO TRAFFIC BY VARIOUS TRADES SHALL BE PROTECTED BY TEMPORARY WALK PADS.
10. PROVIDE TREATED WOOD BLOCKING EQUAL IN THICKNESS TO INSULATION SYSTEM AT ROOF PERIMETER AND AROUND ALL ROOF PENETRATIONS. ANCHOR PER SECTION 1-49 OF THE FM GLOBAL LOSS PREVENTION GUIDE.
11. EXTEND ALL PLUMBING VENTS TO PROVIDE A MIN. OF 12" OF HEIGHT FROM TOP OF INSULATION. ALL FITTINGS TO BE AIR AND WATER TIGHT. SEE PLUMBING PLANS FOR LOCATIONS.
12. ROOF INSULATION SADDLES AND CRICKETS ARE DIAGRAMMATIC. ROOF INSULATION MANUFACTURER SHALL DESIGN AND SIZE THESE PER THE ROOF MEMBRANE MANUFACTURERS RECOMMENDATIONS. CRICKETS AND SADDLES SHOULD HAVE A MINIMUM OF TWO TIMES THE SLOPE OF THE PRIMARY TAPERED SYSTEM OR STRUCTURAL SLOPE. THE RATIO OF A CRICKET'S WIDTH TO LENGTH SHOULD BE NO LESS THAN 1 TO 3.
13. PROVIDE SADDLES/CRICKETS AROUND ALL NEW ROOF TOP EQUIPMENT. SEE MECHANICAL, ELECTRICAL AND PLUMBING DRAWINGS FOR LOCATIONS OF ALL ROOF PENETRATIONS.
14. PROVIDE TAPERED INSULATION WHERE REQUIRED TO TRANSITION FROM ONE INSULATION HEIGHT TO ANOTHER.
15. NOTCH ALL INSULATION AS REQUIRED TO ACCOMMODATE SURFACE MOUNTED CONDUIT, FASTENERS, OFFSETS AND OTHER PROJECTIONS EXTENDING ABOVE THE SURFACE OF THE DECK.
16. PERIMETER EDGE METAL TO COMPLY WITH ANSI/SPRI ES-1 FM GLOBAL 1-49.
17. SEE MECHANICAL, ELECTRICAL AND PLUMBING (MEP) SHEETS FOR ROOF TOP EQUIPMENT.
18. INSPECT ALL WOOD BLOCKING SCHEDULED TO REMAIN. NOTIFY ARCHITECT OF ANY DETERIORATED BLOCKING NEEDING REPLACEMENT. CONTRACTOR TO REPLACE AND DAMAGED BLOCKING ON A TIME AND MATERIAL BASIS, SEE SPECIFICATIONS.
19. ALL ROOF DETAIL DRAWINGS CONTAINED IN THIS SET ARE DIAGRAMMATIC. ADJUST ROOF DETAILS BASED ON SPECIFIC ROOFING SYSTEM SELECTED ACCORDING TO MANUFACTURER'S WRITTEN SPECIFICATIONS AND APPROVED DETAIL DRAWINGS. ALL ASSEMBLY COMPLICATIONS SHOULD BE BROUGHT TO THE ATTENTION OF THE ARCHITECT.
20. THE ROOF CONTRACTOR SHALL PROTECT ALL ROOF DRAINS, GUTTERS AND DOWNSPOUTS FROM DEBRIS CREATED DURING CONSTRUCTION. THE ROOF CONTRACTOR SHALL CLEAR ALL DRAINS, GUTTERS AND DOWNSPOUTS PRIOR TO COMPLETION OF WORK AND TO ENSURE THAT THEY ARE FREE OF DEBRIS AND FUNCTIONING PROPERLY.
21. MECHANICAL, ELECTRICAL AND PLUMBING INFORMATION SHOWN ON THIS PLAN IS GENERAL IN NATURE. REFER TO P, M AND E DRAWINGS FOR FURTHER INFORMATION AND COORDINATE ALL REQUIRED ROOF OPENINGS OR ROOF MOUNTED EQUIPMENT.

ROOF PLAN NOTES

1 STANDARD ROOF DRAIN AND OVERFLOW DRAIN. FLASH PER MANUFACTURERS STANDARD DETAILS AND PER OVERALL SYSTEM WARRANTY.
2 1/2":FT SLOPE ROOF INSULATION CRICKET; TYPICAL.
3 MECHANICAL EQUIPMENT ON ROOF CURB. TOP OF CURB MINIMUM 12" ABOVE ROOF SURFACE. FLASH PER MANUFACTURERS STANDARD DETAILS AND PER OVERALL SYSTEM WARRANTY.
4 PLUMBING VENT. FLASH PER ROOFING MANUFACTURERS STANDARD DETAILS AND PER OVERALL SYSTEM WARRANTY.
5 WALKWAY PADS. SEE SPECIFICATIONS.
6 PREFABRICATED METAL DRIP EDGE. SEE SPECIFICATIONS FOR BASIS OF DESIGN.
7 PREFABRICATED METAL COPING. SEE SPECIFICATIONS FOR BASIS OF DESIGN.
8 ROOF ANCHOR. FLASH PER ROOFING MANUFACTURERS STANDARD DETAILS AND PER OVERALL SYSTEM WARRANTY.
9 PROVIDE TAPERED INSULATION TO PROVIDE SMOOTH TRANSITION BETWEEN ROOF ON TAPERED INSULATION AND ROOF ON SLOPED STRUCTURE.
10 HOSE BIB. FLASH PER ROOFING MANUFACTURERS STANDARD DETAILS AND PER OVERALL SYSTEM WARRANTY.
11 THERMALLY BROKEN ROOF ACCESS HATCH, BASIS OF DESIGN BILCO 30"X36"
12 FULLY ADHERED PVC MEMBRANE ROOFING ON 1/2" RECOVERY BOARD ON 1/4" PER FOOT TAPERED INSULATION ON METAL DECK. MINIMUM 3" INSULATION THICKNESS AT DRAIN.
13 FULLY ADHEREID PVC MEMBRANE ROOFING ON 1/2" RECOVERY BOARD ON 4" POLYISOCYANURATE ROOF INSULATION (R-20 MIN.) ON SLOPED METAL DECK, TYPICAL.
14 FORMED METAL PANEL MECHANICAL SCREEN.

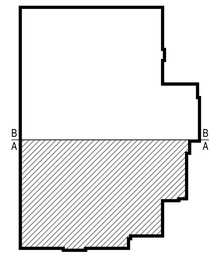

KEYPLAN

MADE @ PLAINFIELD

CSO
8831 Keystone Crossing, Indianapolis, IN 46240
317.848.7600 | csoinc.net
© 2019 CSO Architects, Inc. All Rights Reserved

PROJECT:
TOWN OF PLAINFIELD
MADE@ PLAINFIELD
Red Pride Drive, Plainfield, IN 46168

SCOPE DRAWINGS:
These drawings indicate the general scope of the project in terms of architectural design concept, the dimensions of the building, the type of construction proposed and the type of plumbing, mechanical and electrical systems.
The drawings do not necessarily indicate or describe all work required for full performance and completion of the requirements of the Contract.
In addition to the architectural scope indicated or described, the trade contractors shall furnish all items required for the proper execution and completion of the work.

REVISIONS:
1 BP #1 ADD. #1 01-30-20

ISSUE DATE	DRAWN BY	CHECKED BY
01/30/20	BSN	JRF

DRAWING TITLE:
PARTIAL ROOF PLAN - AREA A

CERTIFIED BY:
BID PACK 1
NOT FOR CONSTRUCTION

DRAWING NUMBER
A205
1

PROJECT NUMBER
19004

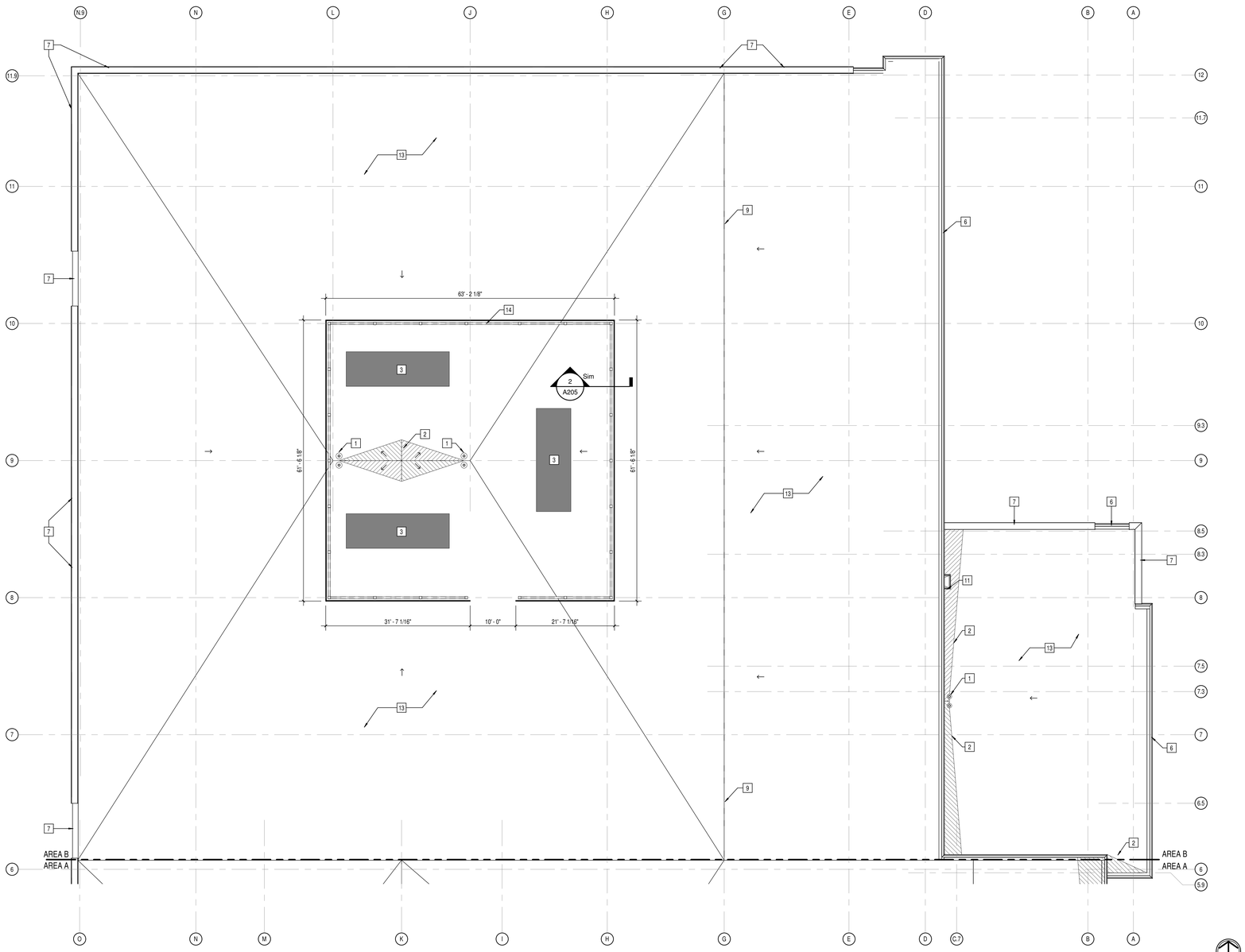

1 A206 PARTIAL ROOF PLAN - AREA B

SCALE: 3/32" = 1'-0"

NORTH

ROOF ABBREVIATIONS

DR	DUCT THRU ROOF
DS	METAL DOWNSPOUT
EF	EXHAUST FAN; SEE MECHANICAL
EJ	EXPANSION JOINT
FS	FLUE STACK; SEE MECHANICAL
GU	METAL GUTTER
PV	PLUMBING VENT
RAV	RELIEF AIR VENT; SEE MECHANICAL
RH	ROOF HATCH

GENERAL ROOF NOTES

1. ALL WORK SHALL BE IN ACCORDANCE WITH THE BEST QUALITY STANDARDS OF THE TRADE. AND SHALL CONFORM WITH THE LATEST EDITION OF ALL FEDERAL, STATE, AND LOCAL CODES AND STANDARDS. THE SAME ARE MADE A PART OF THESE CONTRACT DOCUMENTS, AS IF REPEATED HEREIN.
2. CONTRACT DOCUMENTS CONSIST OF BOTH THE PROJECT MANUAL AND DRAWINGS, AND BOTH ARE INTENDED TO BE COMPLEMENTARY. ANYTHING APPEARING ON EITHER MUST BE EXECUTED THE SAME AS IF SHOWN ON BOTH.
3. CONSTRUCTION DOCUMENTS SHALL BE FOLLOWED AS CLOSELY AS POSSIBLE. HOWEVER, SYSTEMS HAVE BEEN SHOWN DIAGRAMMATICALLY AND IN SOME CASES, ENLARGED FOR CLARITY. PROVIDE ADDITIONAL ITEMS AS REQUIRED TO PROVIDE A COMPLETE AND COORDINATED SYSTEM.
4. CONTRACTOR SHALL PROVIDE ANY AND ALL TEMPORARY UTILITY SERVICE REQUIRED TO CONSTRUCT THE WORK. CONTRACTOR MAY EXTEND SERVICES FROM EXISTING LOCATIONS TO WHERE THEY ARE REQUIRED. REMOVE TEMPORARY UTILITIES AND RELATED EXTENSIONS AS SOON AS PRACTICABLE. RESTORE ALL AFFECTED AREAS TO ORIGINAL CONDITION.
5. CONTRACTOR SHALL REMOVE CONSTRUCTION DEBRIS FROM THE BUILDING AND ROOF DAILY.
6. STORE VOLATILE OR FLAMMABLE LIQUIDS IN UL LISTED FIRE CABINETS.
7. CONTRACTOR SHALL BE SOLELY RESPONSIBLE FOR THE SECURITY OF ALL STORED MATERIALS AND EQUIPMENT INSIDE OR OUTSIDE THE BUILDING.
8. CONTRACTOR SHALL FURNISH NECESSARY TEMPORARY PROTECTION FROM WEATHER TO PROTECT INTERIOR OF BUILDING FROM ELEMENTS OF WEATHER AT ALL TIMES.
9. CONTRACTOR RESPONSIBLE FOR TRAFFIC PROTECTION DURING CONSTRUCTION. AREAS OF WORK SUBJECTED TO TRAFFIC BY VARIOUS TRADES SHALL BE PROTECTED BY TEMPORARY WALK PADS.
10. PROVIDE TREATED WOOD BLOCKING EQUAL IN THICKNESS TO INSULATION SYSTEM AT ROOF PERIMETER AND AROUND ALL ROOF PENETRATIONS. ANCHOR PER SECTION I-49 OF THE FM GLOBAL LOSS PREVENTION GUIDE.
11. EXTEND ALL PLUMBING VENTS TO PROVIDE A MIN. OF 12" OF HEIGHT FROM TOP OF INSULATION. ALL FITTINGS TO BE AIR AND WATER TIGHT. SEE PLUMBING PLANS FOR LOCATIONS.
12. ROOF INSULATION SADDLES AND CRICKETS ARE DIAGRAMMATIC. ROOF INSULATION MANUFACTURER SHALL DESIGN AND SIZE THESE PER THE ROOF MEMBRANE MANUFACTURERS RECOMMENDATIONS. CRICKETS AND SADDLES SHOULD HAVE A MINIMUM OF TWO TIMES THE SLOPE OF THE PRIMARY TAPERED SYSTEM OR STRUCTURAL SLOPE. THE RATIO OF A CRICKET'S WIDTH TO LENGTH SHOULD BE NO LESS THAN 1 TO 3.
13. PROVIDE SADDLES/CRICKETS AROUND ALL NEW ROOF TOP EQUIPMENT. SEE MECHANICAL, ELECTRICAL AND PLUMBING DRAWINGS FOR LOCATIONS OF ALL ROOF PENETRATIONS.
14. PROVIDE TAPERED INSULATION WHERE REQUIRED TO TRANSITION FROM ONE INSULATION HEIGHT TO ANOTHER.
15. NOTCH ALL INSULATION AS REQUIRED TO ACCOMMODATE SURFACE MOUNTED CONDUIT, FASTENERS, OFFSETS AND OTHER PROJECTIONS EXTENDING ABOVE THE SURFACE OF THE DECK.
16. PERIMETER EDGE METAL TO COMPLY WITH ANSI/SPRI ES-1 FM GLOBAL 1-49.
17. SEE MECHANICAL, ELECTRICAL AND PLUMBING (MEP) SHEETS FOR ROOF TOP EQUIPMENT.
18. INSPECT ALL WOOD BLOCKING SCHEDULED TO REMAIN. NOTIFY ARCHITECT OF ANY DETERIORATED BLOCKING NEEDING REPLACEMENT. CONTRACTOR TO REPLACE AND DAMAGED BLOCKING ON A TIME AND MATERIAL BASIS, SEE SPECIFICATIONS.
19. ALL ROOF DETAIL DRAWINGS CONTAINED IN THIS SET ARE DIAGRAMMATIC. ADJUST ROOF DETAILS BASED ON SPECIFIC ROOFING SYSTEM SELECTED ACCORDING TO MANUFACTURER'S WRITTEN SPECIFICATIONS AND APPROVED DETAIL DRAWINGS. ALL ASSEMBLY COMPLICATIONS SHOULD BE BROUGHT TO THE ATTENTION OF THE ARCHITECT.
20. THE ROOF CONTRACTOR SHALL PROTECT ALL ROOF DRAINS, GUTTERS AND DOWNSPOUTS FROM DEBRIS CREATED DURING CONSTRUCTION. THE ROOF CONTRACTOR SHALL CLEAR ALL DRAINS, GUTTERS AND DOWNSPOUTS PRIOR TO COMPLETION OF WORK AND TO ENSURE THAT THEY ARE FREE OF DEBRIS AND FUNCTIONING PROPERLY.
21. MECHANICAL, ELECTRICAL AND PLUMBING INFORMATION SHOWN ON THIS PLAN IS GENERAL IN NATURE. REFER TO P, M AND E DRAWINGS FOR FURTHER INFORMATION AND COORDINATE ALL REQUIRED ROOF OPENINGS OR ROOF MOUNTED EQUIPMENT.

ROOF PLAN NOTES

1 STANDARD ROOF DRAIN AND OVERFLOW DRAIN. FLASH PER MANUFACTURERS STANDARD DETAILS AND PER OVERALL SYSTEM WARRANTY.
2 1/2"/FT SLOPE ROOF INSULATION CRICKET; TYPICAL.
3 MECHANICAL EQUIPMENT ON ROOF CURB. TOP OF CURB MINIMUM 12" ABOVE ROOF SURFACE. FLASH PER MANUFACTURERS STANDARD DETAILS AND PER OVERALL SYSTEM WARRANTY.
4 PLUMBING VENT. FLASH PER ROOFING MANUFACTURERS STANDARD DETAILS AND PER OVERALL SYSTEM WARRANTY.
5 WALKWAY PADS, SEE SPECIFICATIONS.
6 PREFABRICATED METAL DRIP EDGE. SEE SPECIFICATIONS FOR BASIS OF DESIGN.
7 PREFABRICATED METAL COPING. SEE SPECIFICATIONS FOR BASIS OF DESIGN.
8 ROOF ANCHOR. FLASH PER ROOFING MANUFACTURERS STANDARD DETAILS AND PER OVERALL SYSTEM WARRANTY.
9 PROVIDE TAPERED INSULATION TO PROVIDE SMOOTH TRANSITION BETWEEN ROOF ON TAPERED INSULATION AND ROOF ON SLOPED STRUCTURE.
10 HOSE BIB. FLASH PER ROOFING MANUFACTURERS STANDARD DETAILS AND PER OVERALL SYSTEM WARRANTY.
11 THERMALLY BROKEN ROOF ACCESS HATCH, BASIS OF DESIGN BILCO 30"X36"
12 FULLY ADHERED PVC MEMBRANE ROOFING ON 1/2" RECOVERY BOARD ON 1/4" PER FOOT TAPERED INSULATION ON METAL DECK. MINIMUM 3" INSULATION THICKNESS AT DRAIN.
13 FULLY ADHERED PVC MEMBRANE ROOFING ON 1/2" RECOVERY BOARD ON 4" POLYISOCYANURATE ROOF INSULATION (R-20 MIN.) ON SLOPED METAL DECK, TYPICAL.
14 FORMED METAL PANEL MECHANICAL SCREEN.

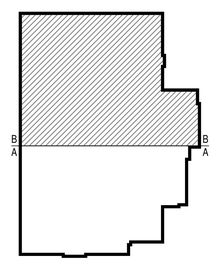

KEYPLAN

MADE @ PLAINFIELD

CSO
8831 Keystone Crossing, Indianapolis, IN 46240
317.848.7600 | csoinc.net

© 2019 CSO Architects, Inc. All Rights Reserved

PROJECT:
TOWN OF PLAINFIELD
MADE@ PLAINFIELD
Red Pride Drive, Plainfield, IN 46168

SCOPE DRAWINGS:
These drawings indicate the general scope of the project in terms of architectural design concept, the dimensions of the building, the major architectural elements and the type of structural, mechanical and electrical systems. The drawings and the accompanying specifications describe all work required for full performance and completion of the requirements of the Contract.
In addition to the architectural scope indicated or described, the trade contractors shall furnish all items required for the proper execution and completion of the work.

REVISIONS:
1 BP #1 ADD. #1 01-30-20

ISSUE DATE	DRAWN BY	CHECKED BY
01/30/20	BSN	JRF

DRAWING TITLE:
PARTIAL ROOF PLAN - AREA B

CERTIFIED BY:
BID PACK 1
NOT FOR CONSTRUCTION

DRAWING NUMBER
A206
1

PROJECT NUMBER
19004

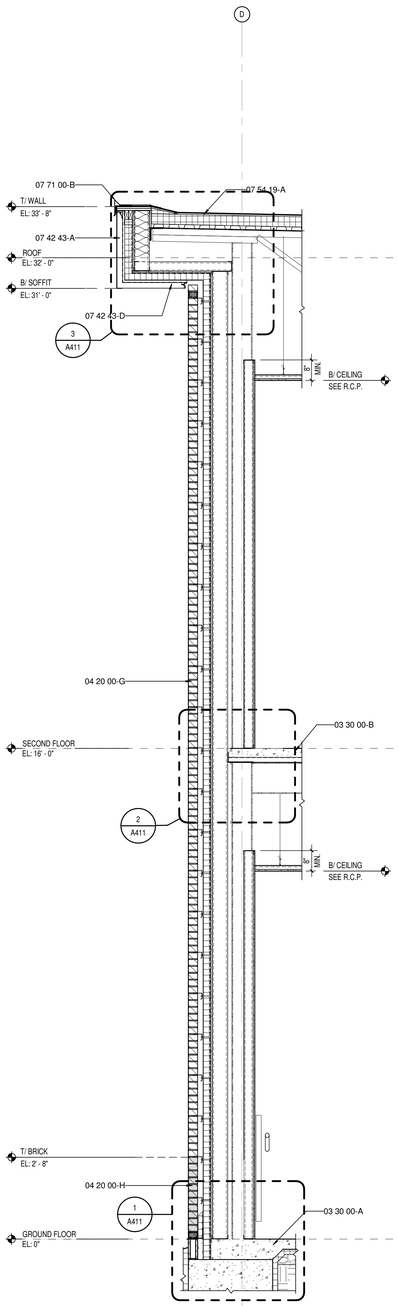

5 A401 WALL SECTION
SCALE: 1/2" = 1'-0"

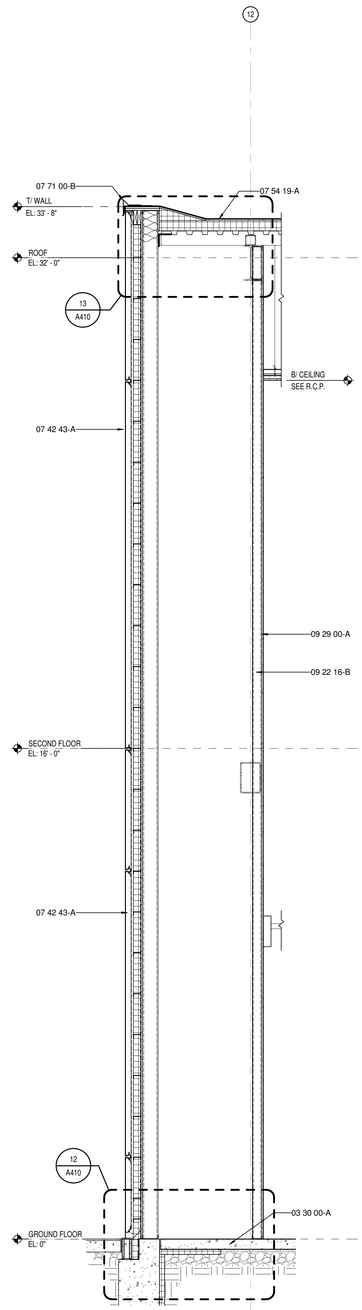

4 A401 WALL SECTION
SCALE: 1/2" = 1'-0"

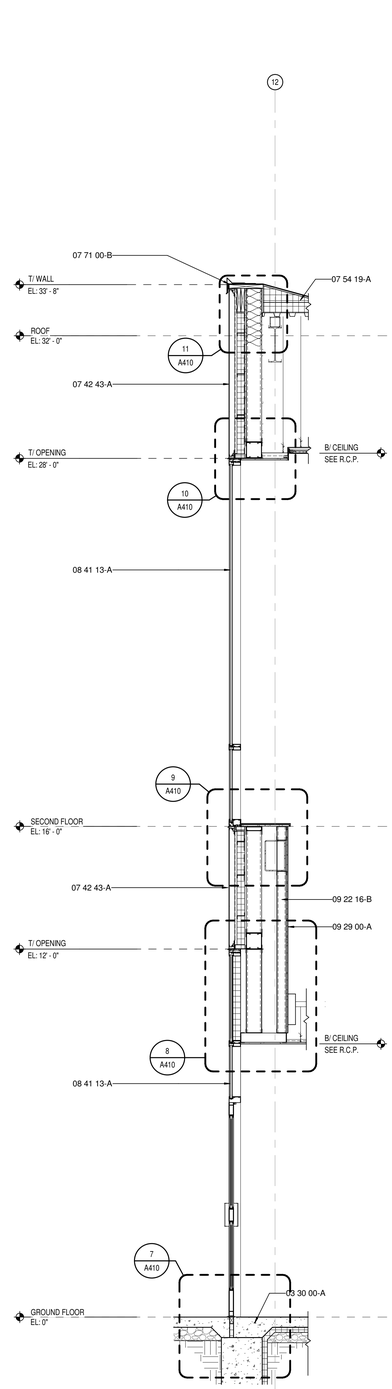

3 A401 WALL SECTION
SCALE: 1/2" = 1'-0"

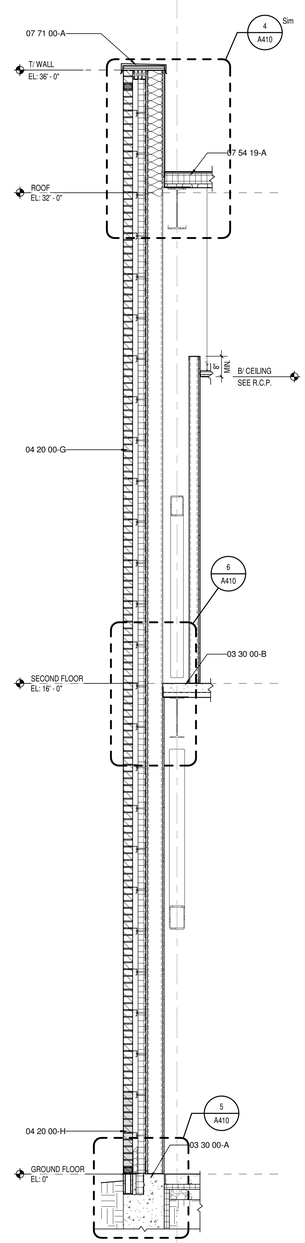

2 A401 WALL SECTION
SCALE: 1/2" = 1'-0"

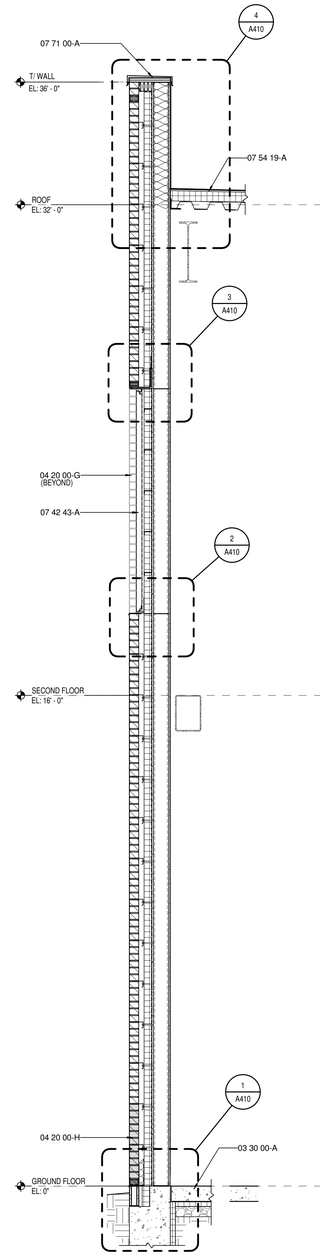

1 A401 WALL SECTION
SCALE: 1/2" = 1'-0"

KEYNOTE LEGEND

03 30 00-A	CONCRETE SLAB OVER VAPOR BARRIER ON DRAINAGE FILL. SEE STRUCTURAL
03 30 00-B	CONCRETE SLAB ON METAL DECK- SEE STRUCTURAL
03 30 00-D	CONCRETE FOOTING- SEE STRUCTURAL
03 30 00-F	1/2" EXPANSION MATERIAL
04 20 00-A	GROUT SOLID
04 20 00-B	ADJUSTIBLE MASONRY VENEER ANCHOR AT 16" O.C. VERTICALLY
04 20 00-D	WEEP HOLES AT 16" O.C.
04 20 00-F	CAVITY DRAINAGE MATERIAL
04 20 00-G	BRICK TYPE 1
04 20 00-H	BRICK TYPE 2 (ACCENT)
04 20 00-I	CONCRETE MASONRY UNIT
04 20 00-J	BOND BEAM MASONRY UNIT
04 20 00-K	GROUND FACE CONCRETE MASONRY UNIT
05 12 00-A	STRUCTURAL STEEL FRAMING MEMBER- SEE STRUCTURAL
05 21 00-A	STEEL JOIST- SEE STRUCTURAL
05 21 00-B	STEEL JOIST GIRDER- SEE STRUCTURAL
05 31 00-A	METAL ROOF DECKING- SEE STRUCTURAL
05 31 00-B	METAL FLOOR DECKING- SEE STRUCTURAL
05 31 00-C	METAL DECK CLOSURE
05 40 00-B	3 5/8" 16 GA. MIN GALVANIZED STEEL STUD
05 40 00-D	6" 16 GA. MIN GALVANIZED STEEL STUD
05 40 00-G	12" 14 GA. MIN GALVANIZED STEEL STUD TRACK
05 50 00-A	MISCELLANEOUS STEEL - SEE STRUCTURAL
05 50 00-C	PAINTED STEEL BRICK LINTEL
05 50 00-D	STEEL SHELF ANGLE- SEE STRUCTURAL
05 51 00-A	CONCRETE FILLED METAL PAN TREAD AND RISER
05 51 00-B	STAIR METAL STRINGER- TUBE
05 51 00-C	STEEL TUBE LANDING SUPPORT
05 51 00-D	CONCRETE FILLED METAL PAN STAIR LANDING (SEALED)
05 51 00-E	PRECAST POLISHED CONCRETE TREAD (FINISH TO MATCH PC1 SEE A800 SERIES)
05 51 00-F	PRECAST POLISHED CONCRETE STAIR LANDING (FINISH TO MATCH PC1 SEE A800 SERIES)
05 52 13-A	1-1/4" I.D. STAINLESS STEEL PIPE RAILING
05 73 00-A	1-1/4" I.D. STAINLESS STEEL HANDRAIL
05 73 00-B	STAINLESS STEEL HANDRAIL BRACKET
05 73 00-C	STAINLESS STEEL CAP RAIL
05 73 00-D	CORE DRILL AND SET RAILING POST W/NON-SHRINK, NON-METALLIC GROUT
05 73 00-E	1/2" O.D. PAINTED STEEL BALUSTER
05 73 00-F	3/4" X 2" PAINTED STEEL POST
05 73 00-G	2" X 3" POST COVER FLANGE
06 10 53-A	1X WOOD BLOCKING
06 10 53-B	2X WOOD BLOCKING
06 16 00-A	3/4" EXTERIOR GRADE PLYWOOD
06 16 00-B	5/8" EXTERIOR GRADE PLYWOOD
06 16 43-A	5/8" EXTERIOR GYPSUM SHEATHING
06 40 00-A	SOLID PLASTIC SURFACE - 1/2" WINDOW STOOL
07 21 00-A	SLAB PERIMETER RIGID INSULATION (R-15 FOR 24" HORZ. & VERT.)
07 21 00-B	PACK FULL WITH MINERAL WOOL BATT INSULATION
07 21 00-C	3" CAVITY WALL EXTRUDED POLYSTYRENE INSULATION (R-16.8)
07 21 00-D	THERMALLY BROKEN Z-CLIPS @ 16" O.C. VERTICALLY
07 21 00-E	SPRAY APPLIED THERMAL INSULATION (R-20)
07 21 00-F	MINERAL WOOL BATT INSULATION
07 24 15-A	DIRECT APPLIED FINISH SYSTEM (DAFS)- UN-INSULATED SOFFIT
07 25 00-A	WEATHER RESISTIVE BARRIERS- BUILDING WRAP
07 27 26-A	FLUID APPLIED MEMBRANE AIR BARRIER
07 42 13-A	PRE-FINISHED METAL WALL PANEL
07 42 13-B	FLASHING
07 42 13-C	TRIM
07 42 43-A	COMPOSITE METAL WALL PANEL
07 42 43-B	HAT CHANNEL - SEE SECTIONS FOR DEPTH
07 42 43-D	COMPOSITE METAL SOFFIT
07 54 19-A	POLYVINYL-CHLORIDE MEMBRANE (PVC) ROOFING SYSTEM
07 54 19-B	MEMBRANE ROOFING - EXTEND OVER AND ATTACH TO FRONT FACE OF PARAPET
07 54 19-C	2 LAYERS OF 2" POLYISO INSULATION BOARD (R-26)
07 54 19-D	1/2" COVER BOARD
07 54 19-E	TAPERED POLYISO INSULATION BOARD
07 71 00-A	MANUFACTURED COPING
07 71 00-B	MANUFACTURED GRAVEL STOP
07 92 00-A	BACKER ROD AND SEALANT
07 92 00-B	SEALANT EACH SIDE, TYPICAL
07 92 00-C	SEALANT
07 92 00-D	BACKER ROD AND SEALANT EACH SIDE, TYPICAL
08 11 13-A	HOLLOW METAL DOOR
08 11 13-B	HOLLOW METAL DOOR/BORROWED LIGHT FRAME
08 14 16-A	FLUSH WOOD DOOR
08 33 23-A	OVERHEAD COILING DOOR
08 41 13-A	4 1/2" ALUMINUM FRAMED STOREFRONT
08 41 13-B	ALUMINUM ENTRANCE DOOR
08 41 13-C	ALUMINUM BRAKE METAL TO MATCH STOREFRONT FRAME
08 44 13-A	7 1/2" DEEP ALUMINUM CURTAINWALL SYSTEM
08 44 13-B	CURTAINWALL ATTACHMENT MEMBER, ALLOW FOR THERMAL MOVEMENT
08 80 00-A	GLAZING - SEE SCHEDULE/ELEVATIONS
09 22 16-A	7/8" FURRING CHANNEL
09 22 16-B	3 5/8" STEEL STUD
09 22 16-C	6" STEEL STUD
09 22 16-E	METAL STUD KICKERS AS REQUIRED
09 22 16-F	10" STEEL STUD
09 29 00-A	5/8" GYPSUM WALL BOARD (SEE SPECS FOR TYPE)
09 29 00-C	SUSPENDED GYPSUM BOARD CEILING ASSEMBLY
09 29 00-D	METAL J- MOULD
09 51 13-A	ACOUSTICAL CEILING SUSPENSION ASSEMBLY
31 20 00-A	FINISH GRADE- SEE CIVIL SHEETS
32 13 13-A	SIDEWALK- SEE CIVIL SHEETS

CSO
8831 Keystone Crossing, Indianapolis, IN 46240
317.848.7600 | csoinc.net

© 2019 CSO Architects, Inc. All Rights Reserved

PROJECT:
TOWN OF PLAINFIELD
MADE@ PLAINFIELD
Red Pride Drive, Plainfield, IN 46168

SCOPE DRAWINGS:
These drawings indicate the general scope of the project in terms of architectural design concept, the dimensions of the building, the major architectural elements and the type of structural, mechanical and electrical systems. The drawings and specifications together describe all work required for full performance and completion of the requirements of the Contract.
Unless specifically noted, the general scope indicated or described, the trade contractors shall furnish all items required for the proper execution and completion of the work.

REVISIONS:
1 BP #1 ADD. #1 01-30-20

ISSUE DATE	DRAWN BY	CHECKED BY
01/30/20	BSN	JRF

DRAWING TITLE:
WALL SECTIONS

CERTIFIED BY:
BID PACK 1
NOT FOR CONSTRUCTION

DRAWING NUMBER
A401

PROJECT NUMBER
19004

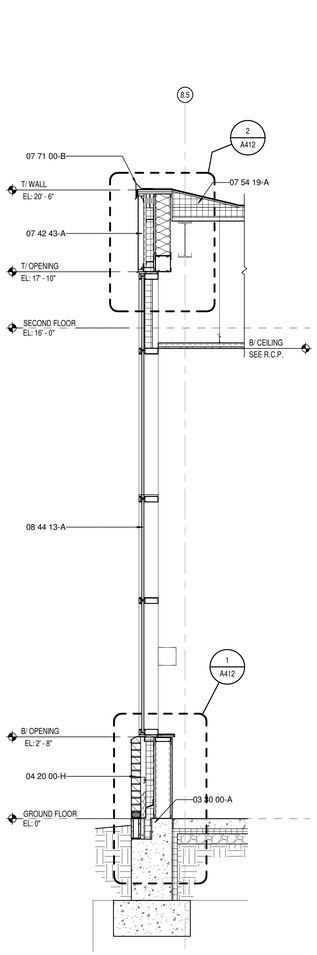

5 A402 WALL SECTION
SCALE: 1/2" = 1'-0"

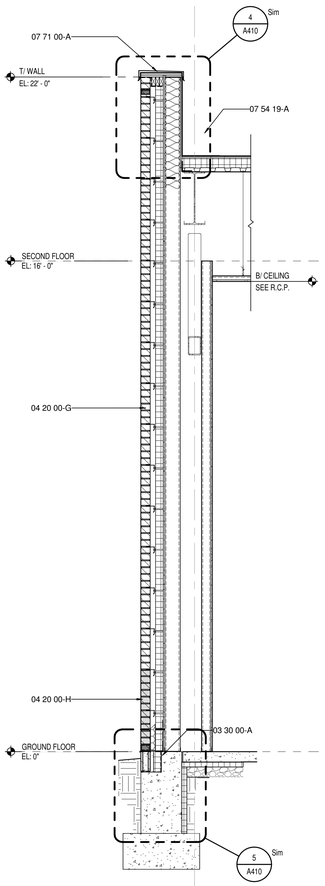

4 A402 WALL SECTION
SCALE: 1/2" = 1'-0"

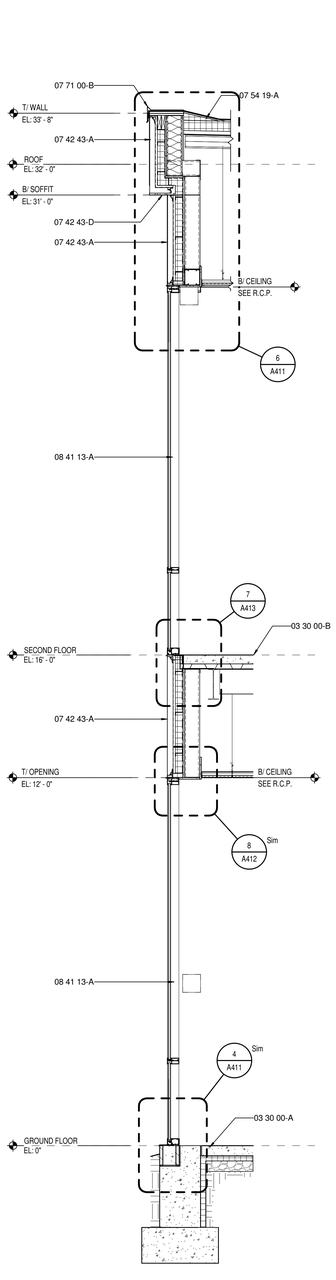

3 A402 WALL SECTION
SCALE: 1/2" = 1'-0"

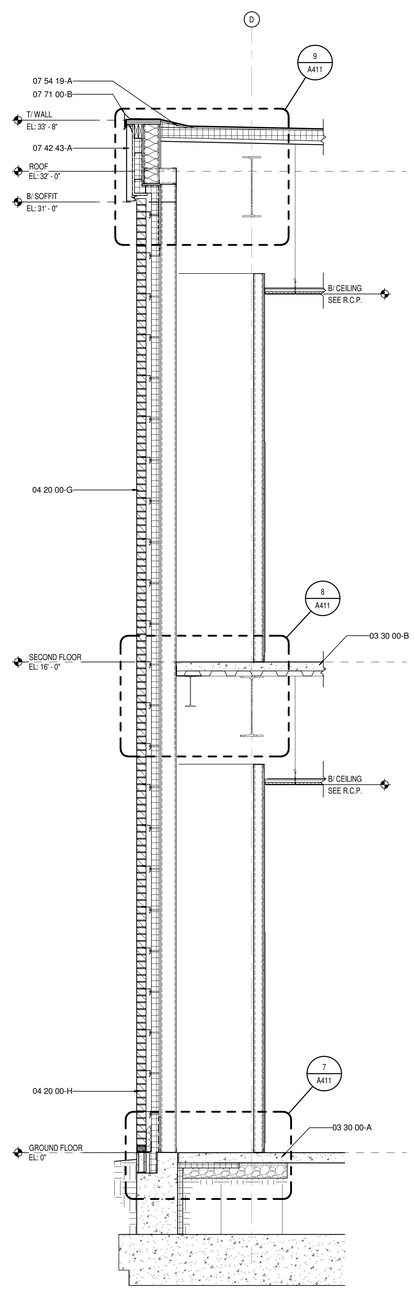

2 A402 WALL SECTION
SCALE: 1/2" = 1'-0"

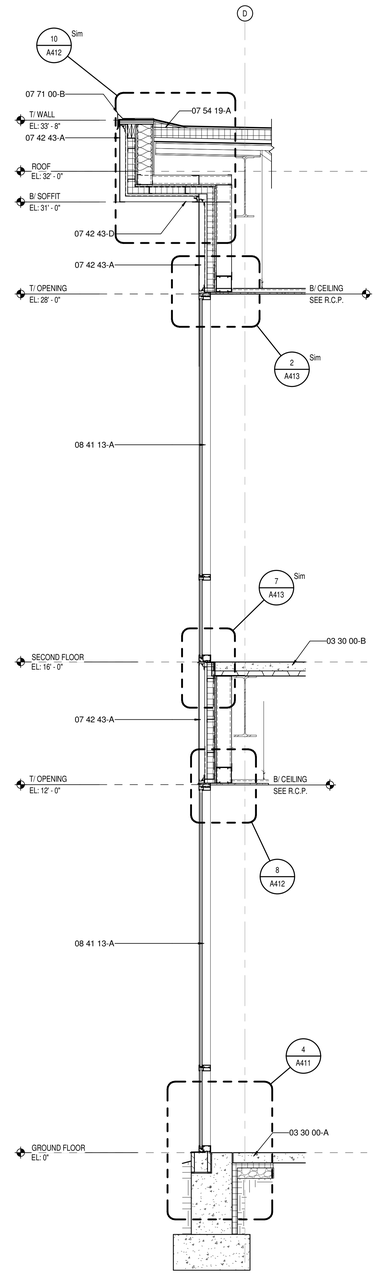

1 A402 WALL SECTION
SCALE: 1/2" = 1'-0"

KEYNOTE LEGEND

03 30 00-A	CONCRETE SLAB OVER VAPOR BARRIER ON DRAINAGE FILL. SEE STRUCTURAL
03 30 00-B	CONCRETE SLAB ON METAL DECK- SEE STRUCTURAL
03 30 00-D	CONCRETE FOOTING- SEE STRUCTURAL
03 30 00-F	1/2" EXPANSION MATERIAL
04 20 00-A	GROUT SOLID
04 20 00-B	ADJUSTIBLE MASONRY VENEER ANCHOR AT 16" O.C. VERTICALLY
04 20 00-D	WEEP HOLES AT 16" O.C.
04 20 00-F	CAVITY DRAINAGE MATERIAL
04 20 00-G	BRICK TYPE 1
04 20 00-H	BRICK TYPE 2 (ACCENT)
04 20 00-I	CONCRETE MASONRY UNIT
04 20 00-J	BOND BEAM MASONRY UNIT
04 20 00-K	GROUND FACE CONCRETE MASONRY UNIT
05 12 00-A	STRUCTURAL STEEL FRAMING MEMBER- SEE STRUCTURAL
05 21 00-A	STEEL JOIST- SEE STRUCTURAL
05 21 00-B	STEEL JOIST GIRDER- SEE STRUCTURAL
05 31 00-A	METAL ROOF DECKING- SEE STRUCTURAL
05 31 00-B	METAL FLOOR DECKING- SEE STRUCTURAL
05 31 00-C	METAL DECK CLOSURE
05 40 00-B	3 5/8" 16 GA. MIN GALVANIZED STEEL STUD
05 40 00-D	6" 16 GA. MIN GALVANIZED STEEL STUD
05 40 00-G	12" 14 GA. MIN GALVANIZED STEEL STUD TRACK
05 50 00-A	MISCELLANEOUS STEEL - SEE STRUCTURAL
05 50 00-C	PAINTED STEEL BRICK LINTEL
05 50 00-D	STEEL SHELF ANGLE- SEE STRUCTURAL
05 51 00-A	CONCRETE FILLED METAL PAN TREAD AND RISER
05 51 00-B	STAIR METAL STRINGER- TUBE
05 51 00-C	STEEL TUBE LANDING SUPPORT
05 51 00-D	CONCRETE FILLED METAL PAN STAIR LANDING (SEALED)
05 51 00-E	PRECAST POLISHED CONCRETE TREAD (FINISH TO MATCH PC1 SEE A800 SERIES)
05 51 00-F	PRECAST POLISHED CONCRETE STAIR LANDING (FINISH TO MATCH PC1 SEE A800 SERIES)
05 52 13-A	1-1/4" I.D. STAINLESS STEEL PIPE RAILING
05 73 00-A	1-1/4" I.D. STAINLESS STEEL HANDRAIL
05 73 00-B	STAINLESS STEEL HANDRAIL BRACKET
05 73 00-C	STAINLESS STEEL CAP RAIL
05 73 00-D	CORE DRILL AND SET RAILING POST W/NON-SHRINK, NON-METALLIC GROUT
05 73 00-E	1/2" O.D. PAINTED STEEL BALUSTER
05 73 00-F	3/4" X 2" PAINTED STEEL POST
05 73 00-G	2" X 3" POST COVER FLANGE
06 10 53-A	1X WOOD BLOCKING
06 10 53-B	2X WOOD BLOCKING
06 16 00-A	3/4" EXTERIOR GRADE PLYWOOD
06 16 00-B	5/8" EXTERIOR GRADE PLYWOOD
06 16 43-A	5/8" EXTERIOR GYPSUM SHEATHING
06 40 00-A	SOLID PLASTIC SURFACE - 1/2" WINDOW STOOL
07 21 00-A	SLAB PERIMETER RIGID INSULATION (R-15 FOR 24" HORZ. & VERT.)
07 21 00-B	PACK FULL WITH MINERAL WOOL BATT INSULATION
07 21 00-C	3" CAVITY WALL EXTRUDED POLYSTYRENE INSULATION (R-16.8)
07 21 00-D	THERMALLY BROKEN Z-CLIPS @ 16" O.C. VERTICALLY
07 21 00-E	SPRAY APPLIED THERMAL INSULATION (R-20)
07 21 00-F	MINERAL WOOL BATT INSULATION
07 24 15-A	DIRECT APPLIED FINISH SYSTEM (DAFS)- UN-INSULATED SOFFIT
07 25 00-A	WEATHER RESISTIVE BARRIERS- BUILDING WRAP
07 27 26-A	FLUID APPLIED MEMBRANE AIR BARRIER
07 42 13-A	PRE-FINISHED METAL WALL PANEL
07 42 13-B	FLASHING
07 42 13-C	TRIM
07 42 43-A	COMPOSITE METAL WALL PANEL
07 42 43-B	HAT CHANNEL - SEE SECTIONS FOR DEPTH
07 42 43-D	COMPOSITE METAL SOFFIT
07 54 19-A	POLYVINYL-CHLORIDE MEMBRANE (PVC) ROOFING SYSTEM
07 54 19-B	MEMBRANE ROOFING - EXTEND OVER AND ATTACH TO FRONT FACE OF PARAPET
07 54 19-C	2 LAYERS OF 2" POLYISO INSULATION BOARD (R-26)
07 54 19-D	1/2" COVER BOARD
07 54 19-E	TAPERED POLYISO INSULATION BOARD
07 71 00-A	MANUFACTURED COPING
07 71 00-B	MANUFACTURED GRAVEL STOP
07 92 00-A	BACKER ROD AND SEALANT
07 92 00-B	SEALANT EACH SIDE, TYPICAL
07 92 00-C	SEALANT
07 92 00-D	BACKER ROD AND SEALANT EACH SIDE, TYPICAL
08 11 13-A	HOLLOW METAL DOOR
08 11 13-B	HOLLOW METAL DOOR/BORROWED LIGHT FRAME
08 14 16-A	FLUSH WOOD DOOR
08 33 23-A	OVERHEAD COILING DOOR
08 41 13-A	4 1/2" ALUMINUM-FRAMED STOREFRONT
08 41 13-B	ALUMINUM ENTRANCE DOOR
08 41 13-C	ALUMINUM BRAKE METAL TO MATCH STOREFRONT FRAME
08 44 13-A	7 1/2" DEEP ALUMINUM CURTAINWALL SYSTEM
08 44 13-B	CURTAINWALL ATTACHMENT MEMBER, ALLOW FOR THERMAL MOVEMENT
08 80 00-A	GLAZING - SEE SCHEDULE/ELEVATIONS
09 22 16-A	7/8" FURRING CHANNEL
09 22 16-B	3 5/8" STEEL STUD
09 22 16-C	6" STEEL STUD
09 22 16-E	METAL STUD KICKERS AS REQUIRED
09 22 16-F	10" STEEL STUD
09 29 00-A	5/8" GYPSUM WALL BOARD (SEE SPECS FOR TYPE)
09 29 00-C	SUSPENDED GYPSUM BOARD CEILING ASSEMBLY
09 29 00-D	METAL J- MOULD
09 51 13-A	ACOUSTICAL CEILING SUSPENSION ASSEMBLY
31 20 00-A	FINISH GRADE- SEE CIVIL SHEETS
32 13 13-A	SIDEWALK- SEE CIVIL SHEETS

CSO
8831 Keystone Crossing, Indianapolis, IN 46240
317.848.7600 | csoinc.net

© 2019 CSO Architects, Inc. All Rights Reserved

PROJECT:
TOWN OF PLAINFIELD
MADE@ PLAINFIELD
Red Pride Drive, Plainfield, IN 46168

SCOPE DRAWINGS:
These drawings indicate the general scope of the project in terms of architectural design concept, the dimensions of the building, the type of construction and the type of structural, mechanical and electrical systems.
The drawings do not necessarily indicate or describe all work required for full performance and completion of the requirements of the Contract.
In addition to the indicated scope indicated or described, the trade contractors shall furnish all items required for the proper execution and completion of the work.

REVISIONS:
1 BP #1 ADD. #1 01-30-20

ISSUE DATE	DRAWN BY	CHECKED BY
01/30/20	BSN	JRF

DRAWING TITLE:
WALL SECTIONS

CERTIFIED BY:
BID PACK 1
NOT FOR CONSTRUCTION

DRAWING NUMBER
A402

PROJECT NUMBER
19004

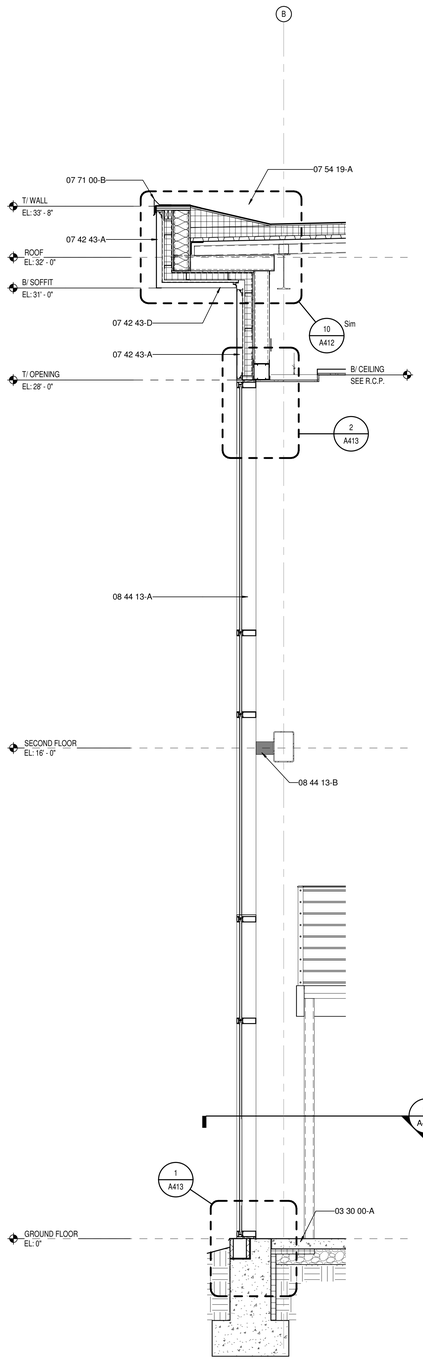

5 A403 WALL SECTION
SCALE: 1/2" = 1'-0"

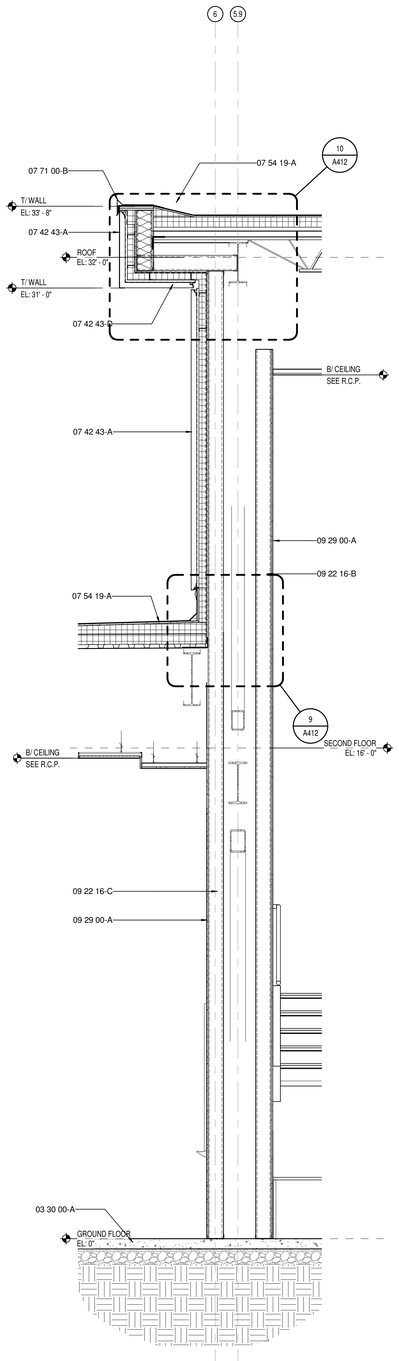

4 A403 WALL SECTION
SCALE: 1/2" = 1'-0"

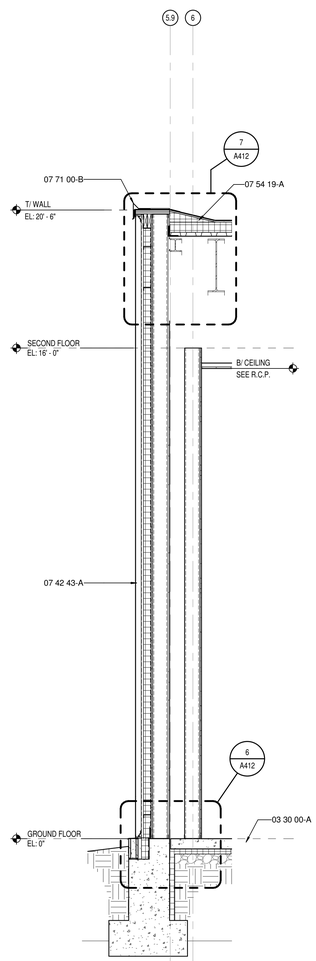

3 A403 WALL SECTION
SCALE: 1/2" = 1'-0"

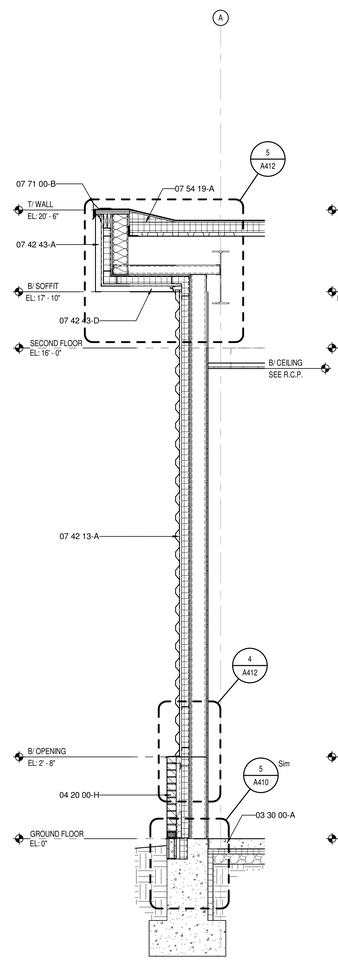

2 A403 WALL SECTION
SCALE: 1/2" = 1'-0"

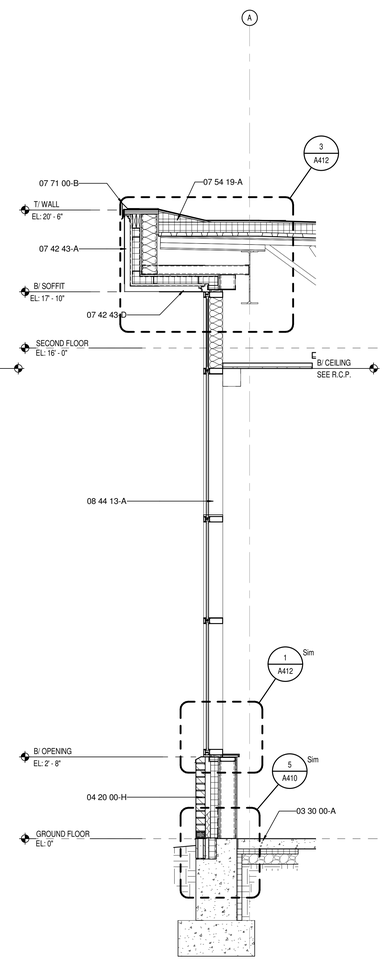

1 A403 WALL SECTION
SCALE: 1/2" = 1'-0"

KEYNOTE LEGEND

03 30 00-A	CONCRETE SLAB OVER VAPOR BARRIER ON DRAINAGE FILL. SEE STRUCTURAL
03 30 00-B	CONCRETE SLAB ON METAL DECK- SEE STRUCTURAL
03 30 00-D	CONCRETE FOOTING- SEE STRUCTURAL
03 30 00-F	1/2" EXPANSION MATERIAL
04 20 00-A	GROUT SOLID
04 20 00-B	ADJUSTIBLE MASONRY VENEER ANCHOR AT 16" O.C. VERTICALLY
04 20 00-D	WEEP HOLES AT 16" O.C.
04 20 00-F	CAVITY DRAINAGE MATERIAL
04 20 00-G	BRICK TYPE 1
04 20 00-H	BRICK TYPE 2 (ACCENT)
04 20 00-I	CONCRETE MASONRY UNIT
04 20 00-J	BOND BEAM MASONRY UNIT
04 20 00-K	GROUND FACE CONCRETE MASONRY UNIT
05 12 00-A	STRUCTURAL STEEL FRAMING MEMBER- SEE STRUCTURAL
05 21 00-A	STEEL JOIST- SEE STRUCTURAL
05 21 00-B	STEEL JOIST GIRDER- SEE STRUCTURAL
05 31 00-A	METAL ROOF DECKING- SEE STRUCTURAL
05 31 00-B	METAL FLOOR DECKING- SEE STRUCTURAL
05 31 00-C	METAL DECK CLOSURE
05 40 00-B	3 5/8" 16 GA. MIN GALVANIZED STEEL STUD
05 40 00-D	6" 16 GA. MIN GALVANIZED STEEL STUD
05 40 00-G	12" 14 GA. MIN GALVANIZED STEEL STUD TRACK
05 50 00-A	MISCELLANEOUS STEEL - SEE STRUCTURAL
05 50 00-C	PAINTED STEEL BRICK LINTEL
05 50 00-D	STEEL SHELF ANGLE- SEE STRUCTURAL
05 51 00-A	CONCRETE FILLED METAL PAN TREAD AND RISER
05 51 00-B	STAIR METAL STRINGER- TUBE
05 51 00-C	STEEL TUBE LANDING SUPPORT
05 51 00-D	CONCRETE FILLED METAL PAN STAIR LANDING (SEALED)
05 51 00-E	PRECAST POLISHED CONCRETE TREAD (FINISH TO MATCH PC1 SEE A800 SERIES)
05 51 00-F	PRECAST POLISHED CONCRETE STAIR LANDING (FINISH TO MATCH PC1 SEE A800 SERIES)
05 52 13-A	1-1/4" I.D. STAINLESS STEEL PIPE RAILING
05 73 00-A	1-1/4" I.D. STAINLESS STEEL HANDRAIL
05 73 00-B	STAINLESS STEEL HANDRAIL BRACKET
05 73 00-C	STAINLESS STEEL CAP RAIL
05 73 00-D	CORE DRILL AND SET RAILING POST W/NON-SHRINK, NON-METALLIC GROUT
05 73 00-E	1/2" O.D. PAINTED STEEL BALUSTER
05 73 00-F	3/4" X 2" PAINTED STEEL POST
05 73 00-G	2" X 3" POST COVER FLANGE
06 10 53-A	1X WOOD BLOCKING
06 10 53-B	2X WOOD BLOCKING
06 16 00-A	3/4" EXTERIOR GRADE PLYWOOD
06 16 00-B	5/8" EXTERIOR GRADE PLYWOOD
06 16 43-A	5/8" EXTERIOR GYPSUM SHEATHING
06 40 00-A	SOLID PLASTIC SURFACE - 1/2" WINDOW STOOL
07 21 00-A	SLAB PERIMETER RIGID INSULATION (R-15 FOR 24" HORZ. & VERT.)
07 21 00-B	PACK FULL WITH MINERAL WOOL BATT INSULATION
07 21 00-C	3" CAVITY WALL EXTRUDED POLYSTYRENE INSULATION (R-16.8)
07 21 00-D	THERMALLY BROKEN Z-CLIPS @ 16" O.C. VERTICALLY
07 21 00-E	SPRAY APPLIED THERMAL INSULATION (R-20)
07 21 00-F	MINERAL WOOL BATT INSULATION
07 24 15-A	DIRECT APPLIED FINISH SYSTEM (DAFS)- UN-INSULATED SOFFIT
07 25 00-A	WEATHER RESISTIVE BARRIERS- BUILDING WRAP
07 27 26-A	FLUID APPLIED MEMBRANE AIR BARRIER
07 42 13-A	PRE-FINISHED METAL WALL PANEL
07 42 13-B	FLASHING
07 42 13-C	TRIM
07 42 43-A	COMPOSITE METAL WALL PANEL
07 42 43-B	HAT CHANNEL - SEE SECTIONS FOR DEPTH
07 42 43-D	COMPOSITE METAL SOFFIT
07 54 19-A	POLYVINYL-CHLORIDE MEMBRANE (PVC) ROOFING SYSTEM
07 54 19-B	MEMBRANE ROOFING - EXTEND OVER AND ATTACH TO FRONT FACE OF PARAPET
07 54 19-C	2 LAYERS OF 2" POLYISO INSULATION BOARD (R-26)
07 54 19-D	1/2" COVER BOARD
07 54 19-E	TAPERED POLYISO INSULATION BOARD
07 71 00-A	MANUFACTURED COPING
07 71 00-B	MANUFACTURED GRAVEL STOP
07 92 00-A	BACKER ROD AND SEALANT
07 92 00-B	SEALANT EACH SIDE, TYPICAL
07 92 00-C	SEALANT
07 92 00-D	BACKER ROD AND SEALANT EACH SIDE, TYPICAL
08 11 13-A	HOLLOW METAL DOOR
08 11 13-B	HOLLOW METAL DOOR/BORROWED LIGHT FRAME
08 14 16-A	FLUSH WOOD DOOR
08 33 23-A	OVERHEAD COILING DOOR
08 41 13-A	4 1/2" ALUMINUM-FRAMED STOREFRONT
08 41 13-B	ALUMINUM ENTRANCE DOOR
08 41 13-C	ALUMINUM BRAKE METAL TO MATCH STOREFRONT FRAME
08 44 13-A	7 1/2" DEEP ALUMINUM CURTAINWALL SYSTEM
08 44 13-B	CURTAINWALL ATTACHMENT MEMBER, ALLOW FOR THERMAL MOVEMENT
08 80 00-A	GLAZING - SEE SCHEDULE/ELEVATIONS
09 22 16-A	7/8" FURRING CHANNEL
09 22 16-B	3 5/8" STEEL STUD
09 22 16-C	6" STEEL STUD
09 22 16-E	METAL STUD KICKERS AS REQUIRED
09 22 16-F	10" STEEL STUD
09 29 00-A	5/8" GYPSUM WALL BOARD (SEE SPECS FOR TYPE)
09 29 00-C	SUSPENDED GYPSUM BOARD CEILING ASSEMBLY
09 29 00-D	METAL J- MOULD
09 51 13-A	ACOUSTICAL CEILING SUSPENSION ASSEMBLY
31 20 00-A	FINISH GRADE- SEE CIVIL SHEETS
32 13 13-A	SIDEWALK- SEE CIVIL SHEETS

CSO
8831 Keystone Crossing, Indianapolis, IN 46240
317.848.7600 | csoinc.net

© 2019 CSO Architects, Inc. All Rights Reserved

PROJECT:
TOWN OF PLAINFIELD
MADE@ PLAINFIELD
Red Pride Drive, Plainfield, IN 46168

SCOPE DRAWINGS:
These drawings indicate the general scope of the project in terms of architectural design concept, the dimensions of the building, the general arrangement of spaces and the type of structural, mechanical and electrical systems.
The drawings do not necessarily indicate or describe all work required for full performance and completion of the requirements of the Contract.
In the absence of a complete scope indicated or described, the trade contractors shall furnish all items required for the proper execution and completion of the work.

REVISIONS:

1	BP #1 ADD. #1	01-30-20

ISSUE DATE	DRAWN BY	CHECKED BY
01/30/20	BSN	JRF

DRAWING TITLE:
WALL SECTIONS

CERTIFIED BY:
BID PACK 1
NOT FOR CONSTRUCTION

DRAWING NUMBER
A403

PROJECT NUMBER
19004

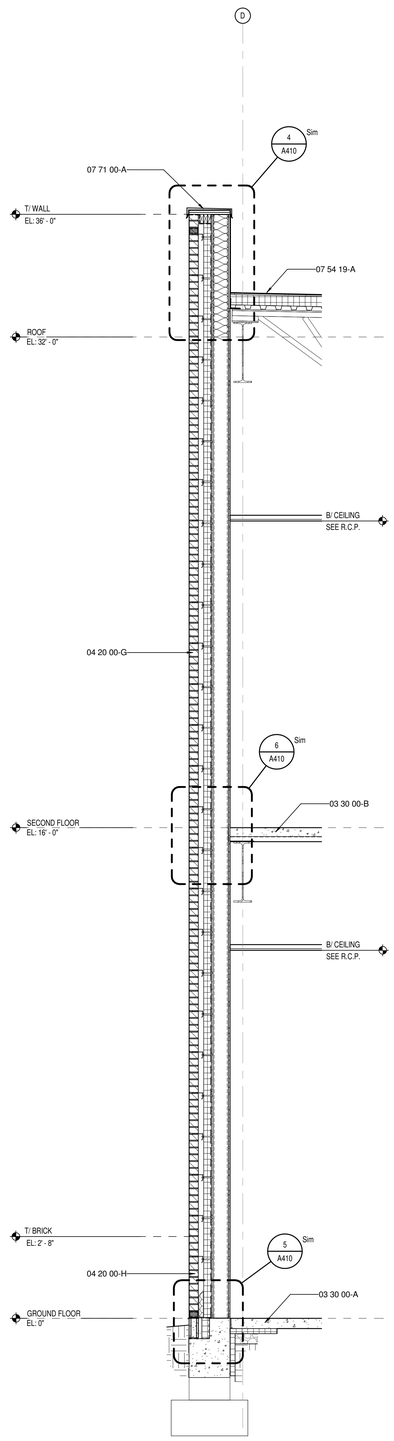

5 A405 WALL SECTION
SCALE: 1/2" = 1'-0"

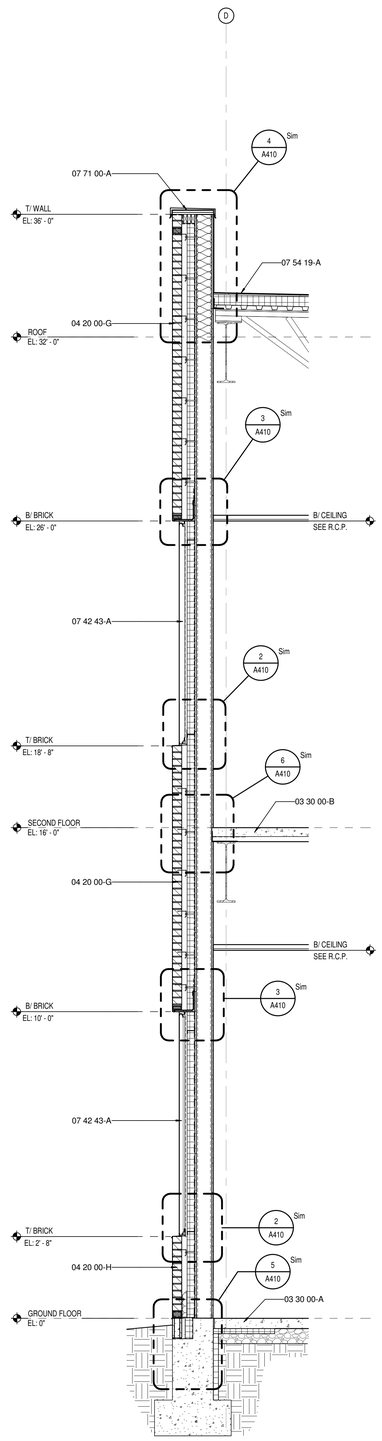

4 A405 WALL SECTION
SCALE: 1/2" = 1'-0"

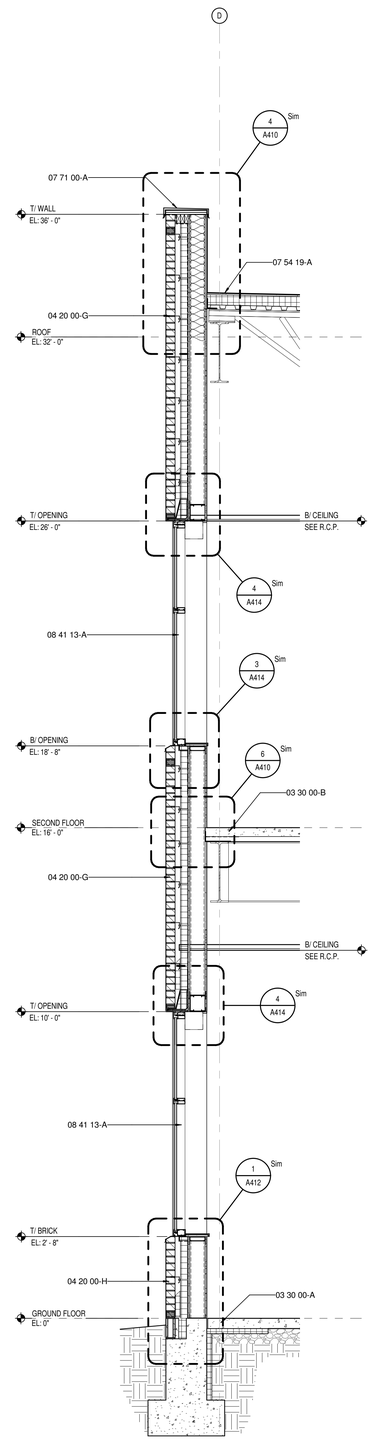

3 A405 WALL SECTION
SCALE: 1/2" = 1'-0"

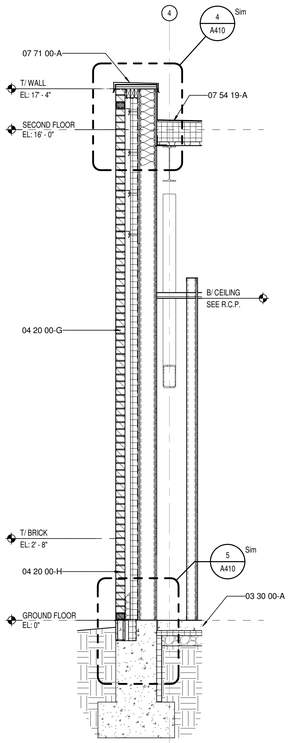

2 A405 WALL SECTION
SCALE: 1/2" = 1'-0"

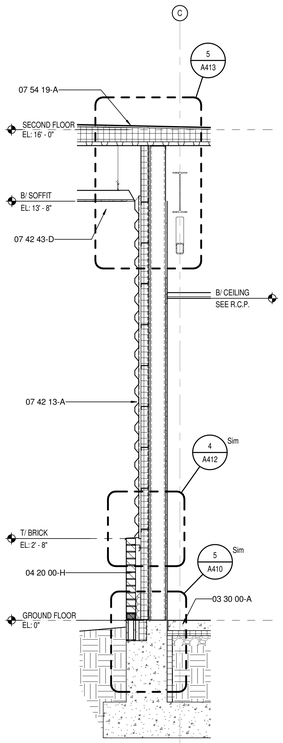

1 A405 WALL SECTION
SCALE: 1/2" = 1'-0"

KEYNOTE LEGEND

03 30 00-A	CONCRETE SLAB OVER VAPOR BARRIER ON DRAINAGE FILL. SEE STRUCTURAL
03 30 00-B	CONCRETE SLAB ON METAL DECK- SEE STRUCTURAL
03 30 00-D	CONCRETE FOOTING- SEE STRUCTURAL
03 30 00-F	1/2" EXPANSION MATERIAL
04 20 00-A	GROUT SOLID
04 20 00-B	ADJUSTIBLE MASONRY VENEER ANCHOR AT 16" O.C. VERTICALLY
04 20 00-D	WEEP HOLES AT 16" O.C.
04 20 00-F	CAVITY DRAINAGE MATERIAL
04 20 00-G	BRICK TYPE 1
04 20 00-H	BRICK TYPE 2 (ACCENT)
04 20 00-I	CONCRETE MASONRY UNIT
04 20 00-J	BOND BEAM MASONRY UNIT
04 20 00-K	GROUND FACE CONCRETE MASONRY UNIT
05 12 00-A	STRUCTURAL STEEL FRAMING MEMBER- SEE STRUCTURAL
05 21 00-A	STEEL JOIST- SEE STRUCTURAL
05 21 00-B	STEEL JOIST GIRDER- SEE STRUCTURAL
05 31 00-A	METAL ROOF DECKING- SEE STRUCTURAL
05 31 00-B	METAL FLOOR DECKING- SEE STRUCTURAL
05 31 00-C	METAL DECK CLOSURE
05 40 00-B	3 5/8" 16 GA. MIN GALVANIZED STEEL STUD
05 40 00-D	6" 16 GA. MIN GALVANIZED STEEL STUD
05 40 00-G	12" 14 GA. MIN GALVANIZED STEEL STUD TRACK
05 50 00-A	MISCELLANEOUS STEEL - SEE STRUCTURAL
05 50 00-C	PAINTED STEEL BRICK LINTEL
05 50 00-D	STEEL SHELF ANGLE- SEE STRUCTURAL
05 51 00-A	CONCRETE FILLED METAL PAN TREAD AND RISER
05 51 00-B	STAIR METAL STRINGER- TUBE
05 51 00-C	STEEL TUBE LANDING SUPPORT
05 51 00-D	CONCRETE FILLED METAL PAN STAIR LANDING (SEALED)
05 51 00-E	PRECAST POLISHED CONCRETE TREAD (FINISH TO MATCH PC1 SEE A800 SERIES)
05 51 00-F	PRECAST POLISHED CONCRETE STAIR LANDING (FINISH TO MATCH PC1 SEE A800 SERIES)
05 52 13-A	1-1/4" I.D. STAINLESS STEEL PIPE RAILING
05 73 00-A	1-1/4" I.D. STAINLESS STEEL HANDRAIL
05 73 00-B	STAINLESS STEEL HANDRAIL BRACKET
05 73 00-C	STAINLESS STEEL CAP RAIL
05 73 00-D	CORE DRILL AND SET RAILING POST W/NON-SHRINK, NON-METALLIC GROUT
05 73 00-E	1/2" O.D. PAINTED STEEL BALUSTER
05 73 00-F	3/4" X 2" PAINTED STEEL POST
05 73 00-G	2" X 3" POST COVER FLANGE
06 10 53-A	1X WOOD BLOCKING
06 10 53-B	2X WOOD BLOCKING
06 16 00-A	3/4" EXTERIOR GRADE PLYWOOD
06 16 00-B	5/8" EXTERIOR GRADE PLYWOOD
06 16 43-A	5/8" EXTERIOR GYPSUM SHEATHING
06 40 00-A	SOLID PLASTIC SURFACE - 1/2" WINDOW STOOL
07 21 00-A	SLAB PERIMETER RIGID INSULATION (R-15 FOR 24" HORZ. & VERT.)
07 21 00-B	PACK FULL WITH MINERAL WOOL BATT INSULATION
07 21 00-C	3" CAVITY WALL EXTRUDED POLYSTYRENE INSULATION (R-16.8)
07 21 00-D	THERMALLY BROKEN Z-CLIPS @ 16" O.C. VERTICALLY
07 21 00-E	SPRAY APPLIED THERMAL INSULATION (R-20)
07 21 00-F	MINERAL WOOL BATT INSULATION
07 24 15-A	DIRECT APPLIED FINISH SYSTEM (DAFS)- UN-INSULATED SOFFIT
07 25 00-A	WEATHER RESISTIVE BARRIERS- BUILDING WRAP
07 27 26-A	FLUID APPLIED MEMBRANE AIR BARRIER
07 42 13-A	PRE-FINISHED METAL WALL PANEL
07 42 13-B	FLASHING
07 42 13-C	TRIM
07 42 43-A	COMPOSITE METAL WALL PANEL
07 42 43-B	HAT CHANNEL - SEE SECTIONS FOR DEPTH
07 42 43-D	COMPOSITE METAL SOFFIT
07 54 19-A	POLYVINYL-CHLORIDE MEMBRANE (PVC) ROOFING SYSTEM
07 54 19-B	MEMBRANE ROOFING - EXTEND OVER AND ATTACH TO FRONT FACE OF PARAPET
07 54 19-C	2 LAYERS OF 2" POLYISO INSULATION BOARD (R-26)
07 54 19-D	1/2" COVER BOARD
07 54 19-E	TAPERED POLYISO INSULATION BOARD
07 71 00-A	MANUFACTURED COPING
07 71 00-B	MANUFACTURED GRAVEL STOP
07 92 00-A	BACKER ROD AND SEALANT
07 92 00-B	SEALANT EACH SIDE, TYPICAL
07 92 00-C	SEALANT
07 92 00-D	BACKER ROD AND SEALANT EACH SIDE, TYPICAL
08 11 13-A	HOLLOW METAL DOOR
08 11 13-B	HOLLOW METAL DOOR/BORROWED LIGHT FRAME
08 14 16-A	FLUSH WOOD DOOR
08 33 23-A	OVERHEAD COILING DOOR
08 41 13-A	4 1/2" ALUMINUM-FRAMED STOREFRONT
08 41 13-B	ALUMINUM ENTRANCE DOOR
08 41 13-C	ALUMINUM BRAKE METAL TO MATCH STOREFRONT FRAME
08 44 13-A	7 1/2" DEEP ALUMINUM CURTAINWALL SYSTEM
08 44 13-B	CURTAINWALL ATTACHMENT MEMBER, ALLOW FOR THERMAL MOVEMENT
08 80 00-A	GLAZING - SEE SCHEDULE/ELEVATIONS
09 22 16-A	7/8" FURRING CHANNEL
09 22 16-B	3 5/8" STEEL STUD
09 22 16-C	6" STEEL STUD
09 22 16-E	METAL STUD KICKERS AS REQUIRED
09 22 16-F	10" STEEL STUD
09 29 00-A	5/8" GYPSUM WALL BOARD (SEE SPECS FOR TYPE)
09 29 00-C	SUSPENDED GYPSUM BOARD CEILING ASSEMBLY
09 29 00-D	METAL J- MOULD
09 51 13-A	ACOUSTICAL CEILING SUSPENSION ASSEMBLY
31 20 00-A	FINISH GRADE- SEE CIVIL SHEETS
32 13 13-A	SIDEWALK- SEE CIVIL SHEETS

MADE @ PLAINFIELD

CSO
8831 Keystone Crossing, Indianapolis, IN 46240
317.848.7600 | csoinc.net
© 2018 CSO Architects, Inc. All Rights Reserved

PROJECT:
TOWN OF PLAINFIELD
MADE@ PLAINFIELD
Red Pride Drive, Plainfield, IN 46168

SCOPE DRAWINGS:
These drawings indicate the general scope of the project in terms of architectural design concept, the dimensions of the building, the general construction materials and the type of structural, mechanical and electrical systems.
The drawings do not necessarily indicate or describe all work required for full performance and completion of the requirements of the Contract.
In the absence of a complete scope indicated or described, the trade contractors shall furnish all items required for the proper execution and completion of the work.

REVISIONS:
1 BP #1 ADD. #1 01-30-20

ISSUE DATE	DRAWN BY	CHECKED BY
01/30/20	BSN	JRF

DRAWING TITLE:
WALL SECTIONS

CERTIFIED BY:
BID PACK 1
NOT FOR CONSTRUCTION

DRAWING NUMBER
A405

PROJECT NUMBER
19004

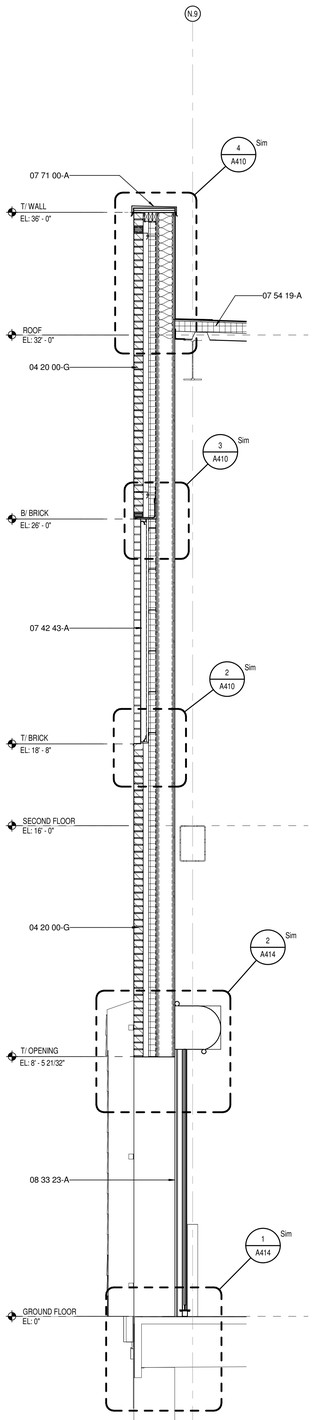

5 A406 WALL SECTION
SCALE: 1/2" = 1'-0"

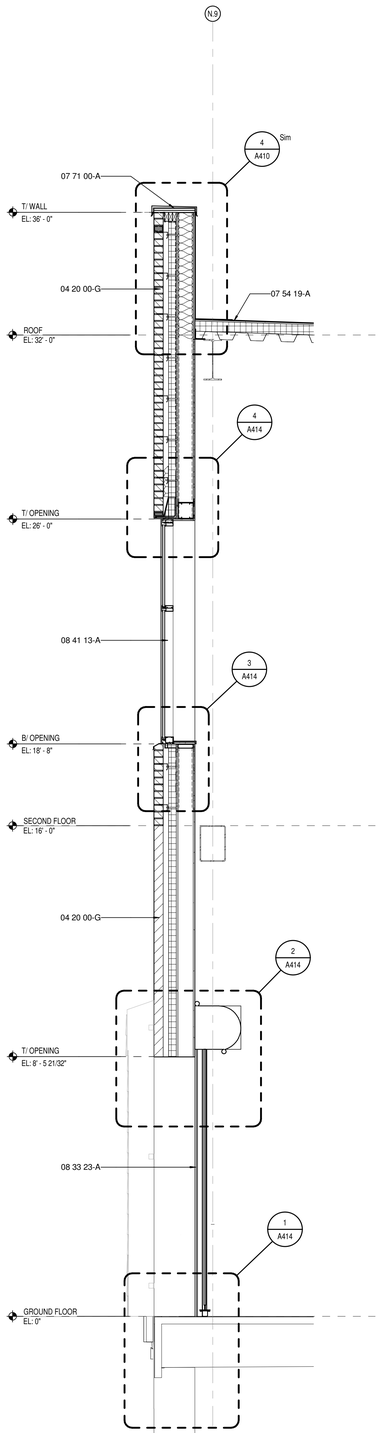

4 A406 WALL SECTION
SCALE: 1/2" = 1'-0"

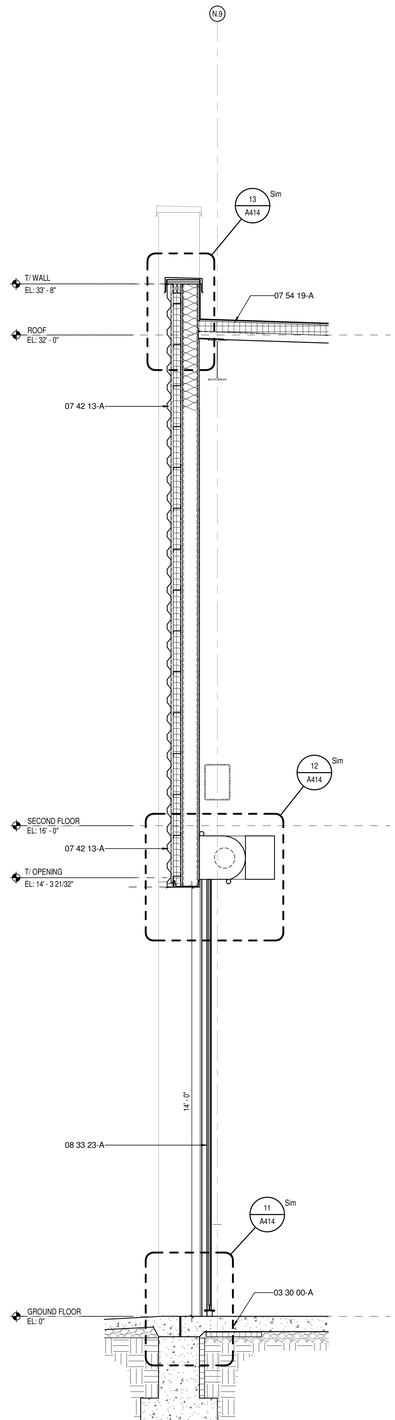

3 A406 WALL SECTION
SCALE: 1/2" = 1'-0"

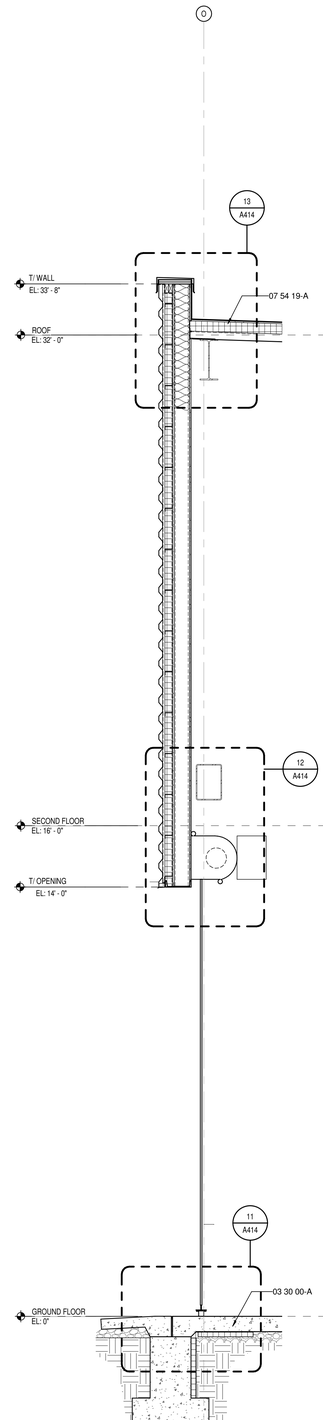

2 A406 WALL SECTION
SCALE: 1/2" = 1'-0"

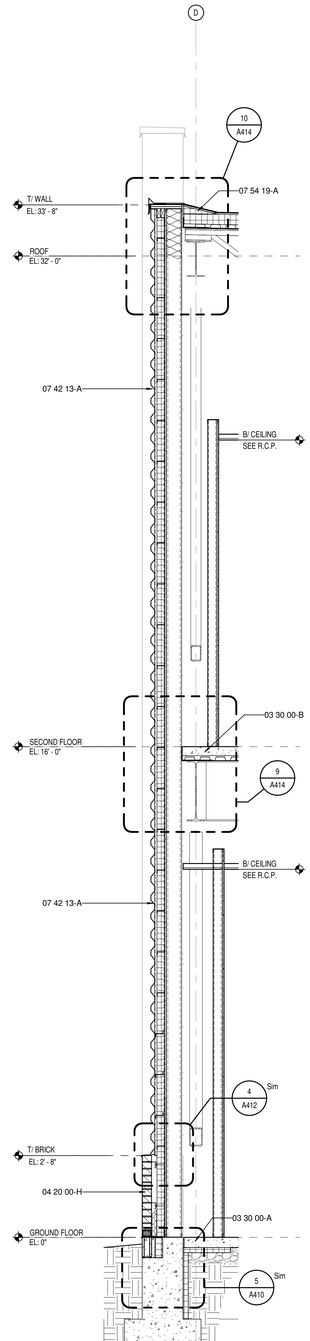

1 A406 WALL SECTION
SCALE: 1/2" = 1'-0"

KEYNOTE LEGEND

03 30 00-A	CONCRETE SLAB OVER VAPOR BARRIER ON DRAINAGE FILL. SEE STRUCTURAL
03 30 00-B	CONCRETE SLAB ON METAL DECK- SEE STRUCTURAL
03 30 00-D	CONCRETE FOOTING- SEE STRUCTURAL
03 30 00-F	1/2" EXPANSION MATERIAL
04 20 00-A	GROUT SOLID
04 20 00-B	ADJUSTIBLE MASONRY VENEER ANCHOR AT 16" O.C. VERTICALLY
04 20 00-D	WEEP HOLES AT 16" O.C.
04 20 00-F	CAVITY DRAINAGE MATERIAL
04 20 00-G	BRICK TYPE 1
04 20 00-H	BRICK TYPE 2 (ACCENT)
04 20 00-I	CONCRETE MASONRY UNIT
04 20 00-J	BOND BEAM MASONRY UNIT
04 20 00-K	GROUND FACE CONCRETE MASONRY UNIT
05 12 00-A	STRUCTURAL STEEL FRAMING MEMBER- SEE STRUCTURAL
05 21 00-A	STEEL JOIST- SEE STRUCTURAL
05 21 00-B	STEEL JOIST GIRDER- SEE STRUCTURAL
05 31 00-A	METAL ROOF DECKING- SEE STRUCTURAL
05 31 00-B	METAL FLOOR DECKING- SEE STRUCTURAL
05 31 00-C	METAL DECK CLOSURE
05 40 00-B	3 5/8" 16 GA. MIN GALVANIZED STEEL STUD
05 40 00-D	6" 16 GA. MIN GALVANIZED STEEL STUD
05 40 00-G	12" 14 GA. MIN GALVANIZED STEEL STUD TRACK
05 50 00-A	MISCELLANEOUS STEEL - SEE STRUCTURAL
05 50 00-C	PAINTED STEEL BRICK LINTEL
05 50 00-D	STEEL SHELF ANGLE- SEE STRUCTURAL
05 51 00-A	CONCRETE FILLED METAL PAN TREAD AND RISER
05 51 00-B	STAIR METAL STRINGER- TUBE
05 51 00-C	STEEL TUBE LANDING SUPPORT
05 51 00-D	CONCRETE FILLED METAL PAN STAIR LANDING (SEALED)
05 51 00-E	PRECAST POLISHED CONCRETE TREAD (FINISH TO MATCH PC1 SEE A800 SERIES)
05 51 00-F	PRECAST POLISHED CONCRETE STAIR LANDING (FINISH TO MATCH PC1 SEE A800 SERIES)
05 52 13-A	1-1/4" I.D. STAINLESS STEEL PIPE RAILING
05 73 00-A	1-1/4" I.D. STAINLESS STEEL HANDRAIL
05 73 00-B	STAINLESS STEEL HANDRAIL BRACKET
05 73 00-C	STAINLESS STEEL CAP RAIL
05 73 00-D	CORE DRILL AND SET RAILING POST W/NON-SHRINK, NON-METALLIC GROUT
05 73 00-E	1/2" O.D. PAINTED STEEL BALUSTER
05 73 00-F	3/4" X 2" PAINTED STEEL POST
05 73 00-G	2" X 3" POST COVER FLANGE
06 10 53-A	1X WOOD BLOCKING
06 10 53-B	2X WOOD BLOCKING
06 16 00-A	3/4" EXTERIOR GRADE PLYWOOD
06 16 00-B	5/8" EXTERIOR GRADE PLYWOOD
06 16 43-A	5/8" EXTERIOR GYPSUM SHEATHING
06 40 00-A	SOLID PLASTIC SURFACE - 1/2" WINDOW STOOL
07 21 00-A	SLAB PERIMETER RIGID INSULATION (R-15 FOR 24" HORZ. & VERT.)
07 21 00-B	PACK FULL WITH MINERAL WOOL BATT INSULATION
07 21 00-C	3" CAVITY WALL EXTRUDED POLYSTYRENE INSULATION (R-16.8)
07 21 00-D	THERMALLY BROKEN Z-CLIPS @ 16" O.C. VERTICALLY
07 21 00-E	SPRAY APPLIED THERMAL INSULATION (R-20)
07 21 00-F	MINERAL WOOL BATT INSULATION
07 24 15-A	DIRECT APPLIED FINISH SYSTEM (DAFS)- UN-INSULATED SOFFIT
07 25 00-A	WEATHER RESISTIVE BARRIERS- BUILDING WRAP
07 27 26-A	FLUID APPLIED MEMBRANE AIR BARRIER
07 42 13-A	PRE-FINISHED METAL WALL PANEL
07 42 13-B	FLASHING
07 42 13-C	TRIM
07 42 43-A	COMPOSITE METAL WALL PANEL
07 42 43-B	HAT CHANNEL - SEE SECTIONS FOR DEPTH
07 42 43-D	COMPOSITE METAL SOFFIT
07 54 19-A	POLYVINYL-CHLORIDE MEMBRANE (PVC) ROOFING SYSTEM
07 54 19-B	MEMBRANE ROOFING - EXTEND OVER AND ATTACH TO FRONT FACE OF PARAPET
07 54 19-C	2 LAYERS OF 2" POLYISO INSULATION BOARD (R-26)
07 54 19-D	1/2" COVER BOARD
07 54 19-E	TAPERED POLYISO INSULATION BOARD
07 71 00-A	MANUFACTURED COPING
07 71 00-B	MANUFACTURED GRAVEL STOP
07 92 00-A	BACKER ROD AND SEALANT
07 92 00-B	SEALANT EACH SIDE, TYPICAL
07 92 00-C	SEALANT
07 92 00-D	BACKER ROD AND SEALANT EACH SIDE, TYPICAL
08 11 13-A	HOLLOW METAL DOOR
08 11 13-B	HOLLOW METAL DOOR/BORROWED LIGHT FRAME
08 14 16-A	FLUSH WOOD DOOR
08 33 23-A	OVERHEAD COILING DOOR
08 41 13-A	4 1/2" ALUMINUM-FRAMED STOREFRONT
08 41 13-B	ALUMINUM ENTRANCE DOOR
08 41 13-C	ALUMINUM BRAKE METAL TO MATCH STOREFRONT FRAME
08 44 13-A	7 1/2" DEEP ALUMINUM CURTAINWALL SYSTEM
08 44 13-B	CURTAINWALL ATTACHMENT MEMBER, ALLOW FOR THERMAL MOVEMENT
08 80 00-A	GLAZING - SEE SCHEDULE/ELEVATIONS
09 22 16-A	7/8" FURRING CHANNEL
09 22 16-B	3 5/8" STEEL STUD
09 22 16-C	6" STEEL STUD
09 22 16-E	METAL STUD KICKERS AS REQUIRED
09 22 16-F	10" STEEL STUD
09 29 00-A	5/8" GYPSUM WALL BOARD (SEE SPECS FOR TYPE)
09 29 00-C	SUSPENDED GYPSUM BOARD CEILING ASSEMBLY
09 29 00-D	METAL J- MOULD
09 51 13-A	ACOUSTICAL CEILING SUSPENSION ASSEMBLY
31 20 00-A	FINISH GRADE- SEE CIVIL SHEETS
32 13 13-A	SIDEWALK- SEE CIVIL SHEETS

CSO
8831 Keystone Crossing, Indianapolis, IN 46240
317.848.7600 | csoinc.net

© 2019 CSO Architects, Inc. All Rights Reserved

PROJECT:
TOWN OF PLAINFIELD
MADE@ PLAINFIELD
Red Pride Drive, Plainfield, IN 46168

SCOPE DRAWINGS:
These drawings indicate the general scope of the project in terms of architectural design concept, the dimensions of the building, the general construction materials and the type of structural, mechanical and electrical patterns.
The drawings do not necessarily indicate or describe all items required for the proper performance and completion of the requirements of the Contract.
On the basis of the general scope indicated or described, the trade contractors shall furnish all items required for the proper execution and completion of the work.

REVISIONS:

1	BP #1 ADD. #1	01-30-20

ISSUE DATE	DRAWN BY	CHECKED BY
01/30/20	BSN	JRF

DRAWING TITLE:
WALL SECTIONS

CERTIFIED BY:
BID PACK 1
NOT FOR CONSTRUCTION

DRAWING NUMBER
A406

PROJECT NUMBER
19004

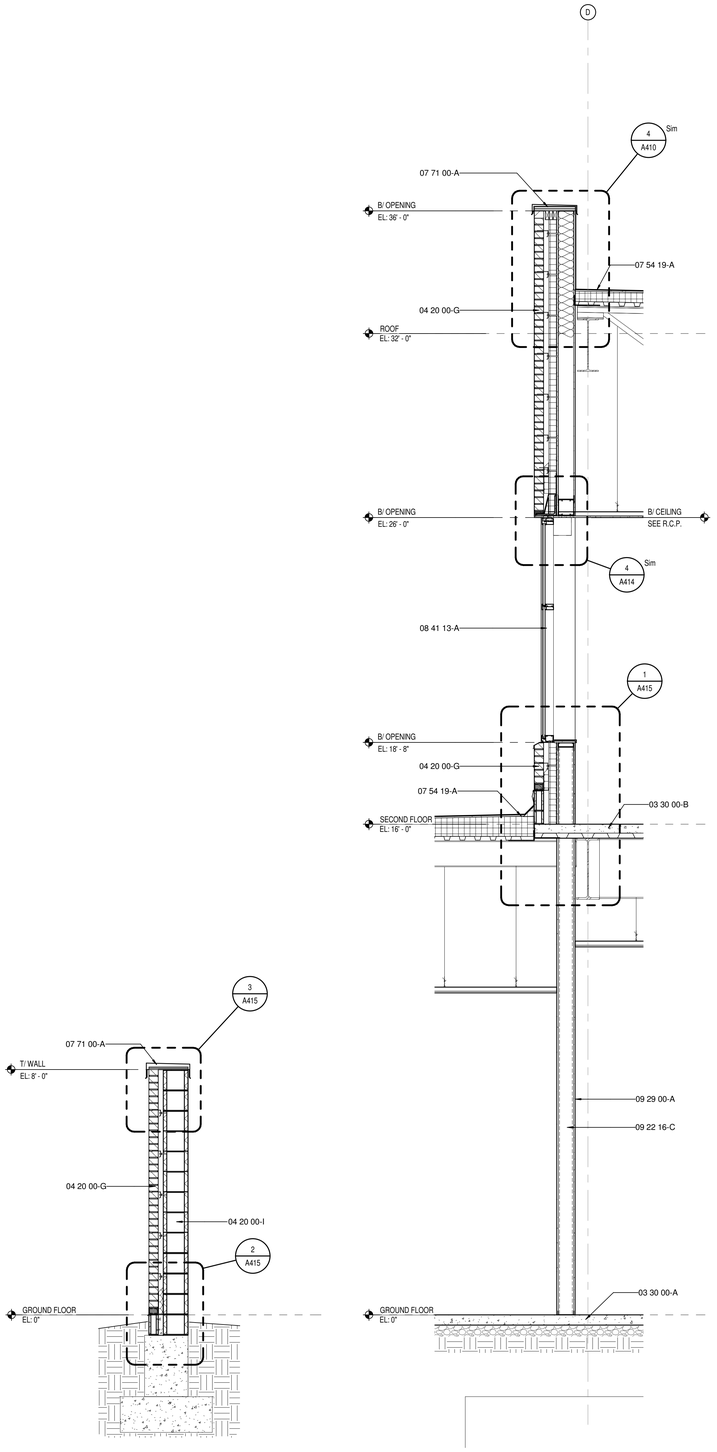

4 A408 WALL SECTION
SCALE: 1/2" = 1'-0"

3 A408 WALL SECTION
SCALE: 1/2" = 1'-0"

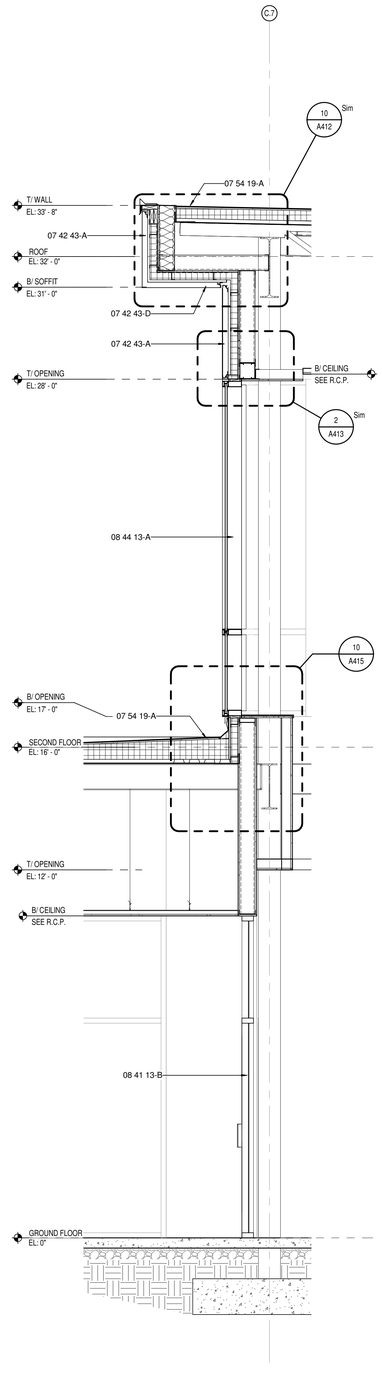

2 A408 WALL SECTION
SCALE: 1/2" = 1'-0"

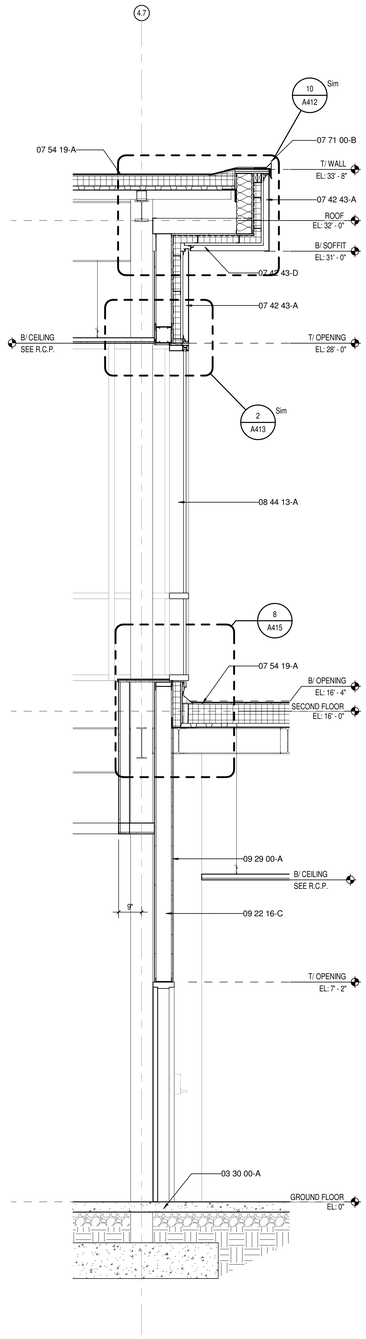

1 A408 WALL SECTION
SCALE: 1/2" = 1'-0"

KEYNOTE LEGEND

03 30 00-A	CONCRETE SLAB OVER VAPOR BARRIER ON DRAINAGE FILL. SEE STRUCTURAL
03 30 00-B	CONCRETE SLAB ON METAL DECK- SEE STRUCTURAL
03 30 00-D	CONCRETE FOOTING- SEE STRUCTURAL
03 30 00-F	1/2" EXPANSION MATERIAL
04 20 00-A	GROUT SOLID
04 20 00-B	ADJUSTIBLE MASONRY VENEER ANCHOR AT 16" O.C. VERTICALLY
04 20 00-D	WEEP HOLES AT 16" O.C.
04 20 00-F	CAVITY DRAINAGE MATERIAL
04 20 00-G	BRICK TYPE 1
04 20 00-H	BRICK TYPE 2 (ACCENT)
04 20 00-I	CONCRETE MASONRY UNIT
04 20 00-J	BOND BEAM MASONRY UNIT
04 20 00-K	GROUND FACE CONCRETE MASONRY UNIT
05 12 00-A	STRUCTURAL STEEL FRAMING MEMBER- SEE STRUCTURAL
05 21 00-A	STEEL JOIST- SEE STRUCTURAL
05 21 00-B	STEEL JOIST GIRDER- SEE STRUCTURAL
05 31 00-A	METAL ROOF DECKING- SEE STRUCTURAL
05 31 00-B	METAL FLOOR DECKING- SEE STRUCTURAL
05 31 00-C	METAL DECK CLOSURE
05 40 00-B	3 5/8" 16 GA. MIN GALVANIZED STEEL STUD
05 40 00-D	6" 16 GA. MIN GALVANIZED STEEL STUD
05 40 00-G	12" 14 GA. MIN GALVANIZED STEEL STUD TRACK
05 50 00-A	MISCELLANEOUS STEEL - SEE STRUCTURAL
05 50 00-C	PAINTED STEEL BRICK LINTEL
05 50 00-D	STEEL SHELF ANGLE- SEE STRUCTURAL
05 51 00-A	CONCRETE FILLED METAL PAN TREAD AND RISER
05 51 00-B	STAIR METAL STRINGER- TUBE
05 51 00-C	STEEL TUBE LANDING SUPPORT
05 51 00-D	CONCRETE FILLED METAL PAN STAIR LANDING (SEALED)
05 51 00-E	PRECAST POLISHED CONCRETE TREAD (FINISH TO MATCH PC1 SEE A800 SERIES)
05 51 00-F	PRECAST POLISHED CONCRETE STAIR LANDING (FINISH TO MATCH PC1 SEE A800 SERIES)
05 52 13-A	1-1/4" I.D. STAINLESS STEEL PIPE RAILING
05 73 00-A	1-1/4" I.D. STAINLESS STEEL HANDRAIL
05 73 00-B	STAINLESS STEEL HANDRAIL BRACKET
05 73 00-C	STAINLESS STEEL CAP RAIL
05 73 00-D	CORE DRILL AND SET RAILING POST W/NON-SHRINK, NON-METALLIC GROUT
05 73 00-E	1/2" O.D. PAINTED STEEL BALUSTER
05 73 00-F	3/4" X 2" PAINTED STEEL POST
05 73 00-G	2" X 3" POST COVER FLANGE
06 10 53-A	1X WOOD BLOCKING
06 10 53-B	2X WOOD BLOCKING
06 16 00-A	3/4" EXTERIOR GRADE PLYWOOD
06 16 00-B	5/8" EXTERIOR GRADE PLYWOOD
06 16 43-A	5/8" EXTERIOR GYPSUM SHEATHING
06 40 00-A	SOLID PLASTIC SURFACE - 1/2" WINDOW STOOL
07 21 00-A	SLAB PERIMETER RIGID INSULATION (R-15 FOR 24" HORZ. & VERT.)
07 21 00-B	PACK FULL WITH MINERAL WOOL BATT INSULATION
07 21 00-C	3" CAVITY WALL EXTRUDED POLYSTYRENE INSULATION (R-16.8)
07 21 00-D	THERMALLY BROKEN Z-CLIPS @ 16" O.C. VERTICALLY
07 21 00-E	SPRAY APPLIED THERMAL INSULATION (R-20)
07 21 00-F	MINERAL WOOL BATT INSULATION
07 24 15-A	DIRECT APPLIED FINISH SYSTEM (DAFS)- UN-INSULATED SOFFIT
07 25 00-A	WEATHER RESISTIVE BARRIERS- BUILDING WRAP
07 27 26-A	FLUID APPLIED MEMBRANE AIR BARRIER
07 42 13-A	PRE-FINISHED METAL WALL PANEL
07 42 13-B	FLASHING
07 42 13-C	TRIM
07 42 43-A	COMPOSITE METAL WALL PANEL
07 42 43-B	HAT CHANNEL - SEE SECTIONS FOR DEPTH
07 42 43-D	COMPOSITE METAL SOFFIT
07 54 19-A	POLYVINYL-CHLORIDE MEMBRANE (PVC) ROOFING SYSTEM
07 54 19-B	MEMBRANE ROOFING - EXTEND OVER AND ATTACH TO FRONT FACE OF PARAPET
07 54 19-C	2 LAYERS OF 2" POLYISO INSULATION BOARD (R-26)
07 54 19-D	1/2" COVER BOARD
07 54 19-E	TAPERED POLYISO INSULATION BOARD
07 71 00-A	MANUFACTURED COPING
07 71 00-B	MANUFACTURED GRAVEL STOP
07 92 00-A	BACKER ROD AND SEALANT
07 92 00-B	SEALANT EACH SIDE, TYPICAL
07 92 00-C	SEALANT
07 92 00-D	BACKER ROD AND SEALANT EACH SIDE, TYPICAL
08 11 13-A	HOLLOW METAL DOOR
08 11 13-B	HOLLOW METAL DOOR/BORROWED LIGHT FRAME
08 14 16-A	FLUSH WOOD DOOR
08 33 23-A	OVERHEAD COILING DOOR
08 41 13-A	4 1/2" ALUMINUM FRAMED STOREFRONT
08 41 13-B	ALUMINUM ENTRANCE DOOR
08 41 13-C	ALUMINUM BRAKE METAL TO MATCH STOREFRONT FRAME
08 44 13-A	7 1/2" DEEP ALUMINUM CURTAINWALL SYSTEM
08 44 13-B	CURTAINWALL ATTACHMENT MEMBER, ALLOW FOR THERMAL MOVEMENT
08 80 00-A	GLAZING - SEE SCHEDULE/ELEVATIONS
09 22 16-A	7/8" FURRING CHANNEL
09 22 16-B	3 5/8" STEEL STUD
09 22 16-C	6" STEEL STUD
09 22 16-E	METAL STUD KICKERS AS REQUIRED
09 22 16-F	10" STEEL STUD
09 29 00-A	5/8" GYPSUM WALL BOARD (SEE SPECS FOR TYPE)
09 29 00-C	SUSPENDED GYPSUM BOARD CEILING ASSEMBLY
09 29 00-D	METAL J- MOULD
09 51 13-A	ACOUSTICAL CEILING SUSPENSION ASSEMBLY
31 20 00-A	FINISH GRADE- SEE CIVIL SHEETS
32 13 13-A	SIDEWALK- SEE CIVIL SHEETS

MADE @ PLAINFIELD

CSO
8831 Keystone Crossing, Indianapolis, IN 46240
317.848.7600 | csoinc.net
© 2019 CSO Architects, Inc. All Rights Reserved

PROJECT:
TOWN OF PLAINFIELD
MADE@ PLAINFIELD
Red Pride Drive, Plainfield, IN 46168

SCOPE DRAWINGS:
These drawings indicate the general scope of the project in terms of architectural design concept, the dimensions of the building, the major architectural elements and the type of structural, mechanical and electrical systems. The Contract Documents are intended to describe all work required for full performance and completion of the requirements of the Contract.
Unless specifically delineated scope indicated or described, the trade contractors shall furnish all items required for the proper execution and completion of the work.

REVISIONS:

ISSUE DATE	DRAWN BY	CHECKED BY
01/30/20	BSN	JRF

DRAWING TITLE:
WALL SECTIONS

CERTIFIED BY:
BID PACK 1
NOT FOR CONSTRUCTION

DRAWING NUMBER
A408

PROJECT NUMBER
19004

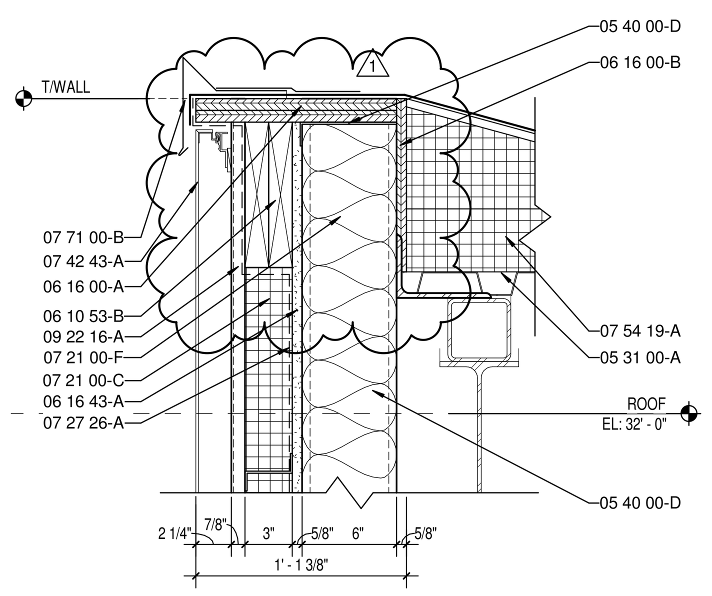

11 / A410 ENLARGED SECTION DETAIL
SCALE: 1 1/2" = 1'-0"

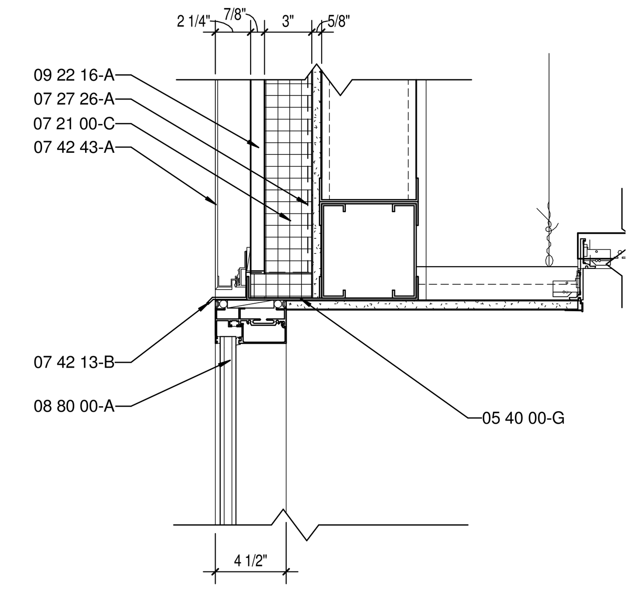

10 / A410 ENLARGED SECTION DETAIL
SCALE: 1 1/2" = 1'-0"

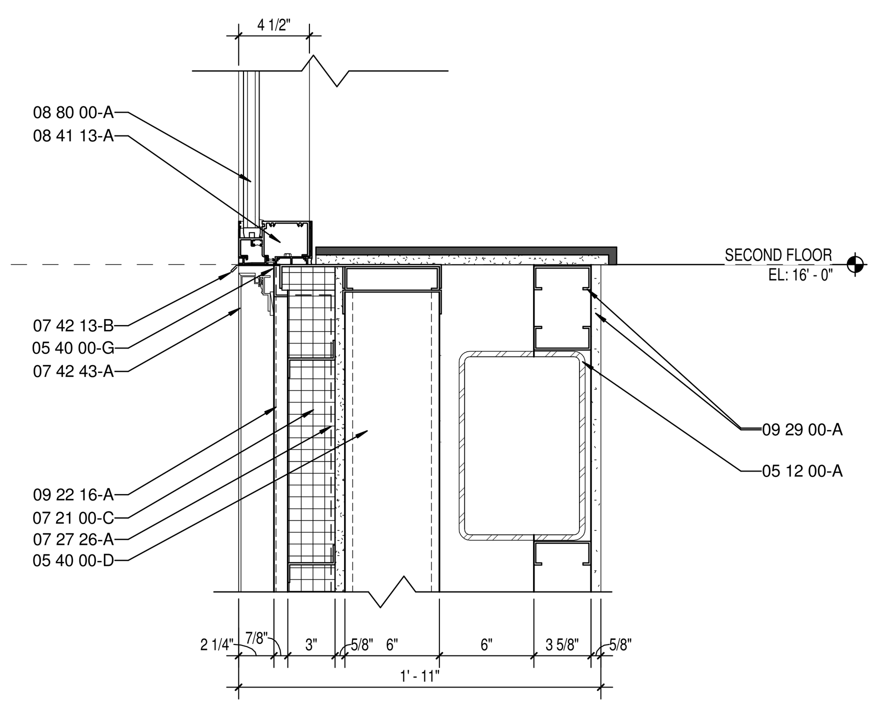

9 / A410 ENLARGED SECTION DETAIL
SCALE: 1 1/2" = 1'-0"

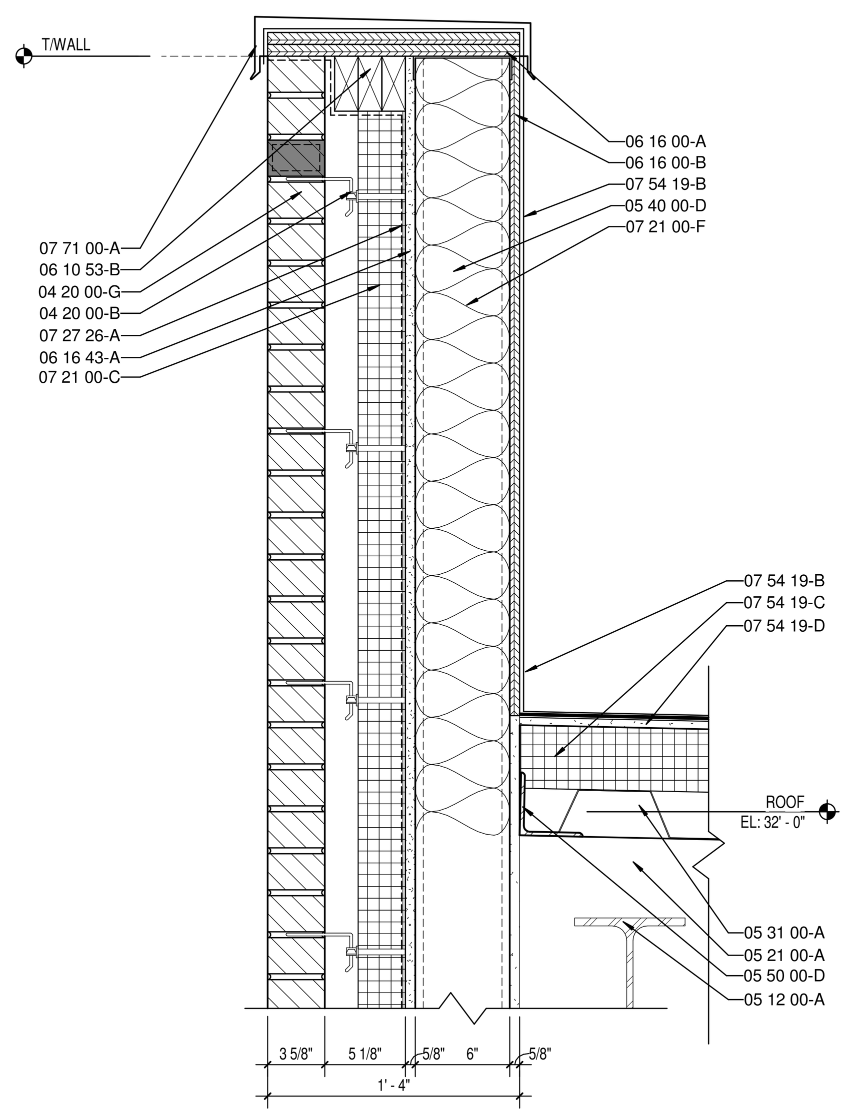

4 / A410 ENLARGED SECTION DETAIL
SCALE: 1 1/2" = 1'-0"

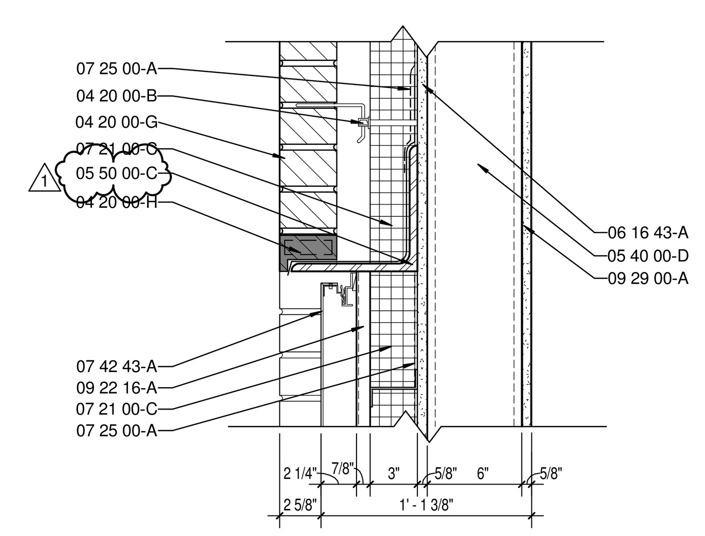

3 / A410 ENLARGED SECTION DETAIL
SCALE: 1 1/2" = 1'-0"

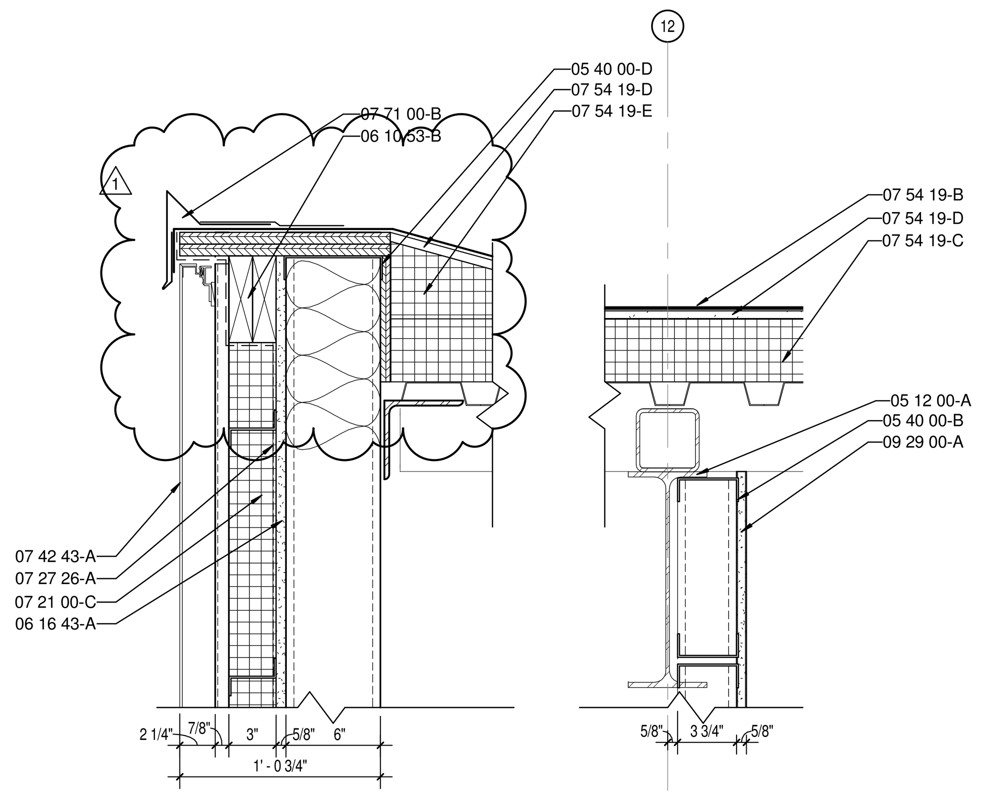

13 / A410 ENLARGED SECTION DETAIL
SCALE: 1 1/2" = 1'-0"

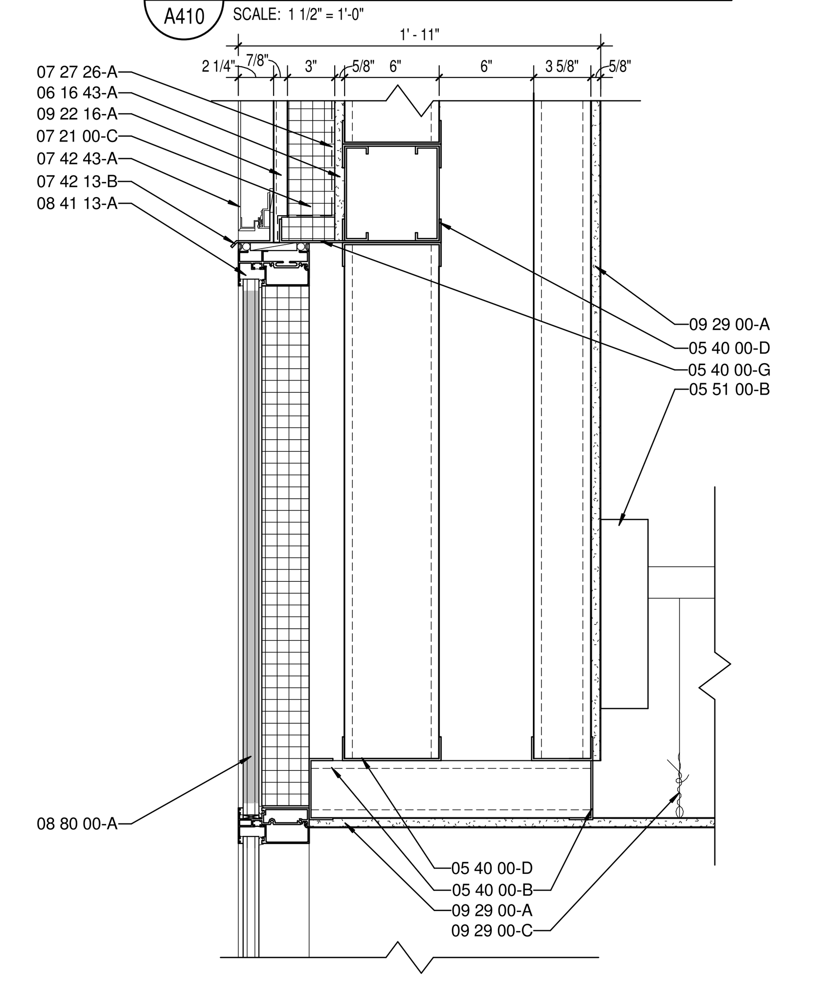

8 / A410 ENLARGED SECTION DETAIL
SCALE: 1 1/2" = 1'-0"

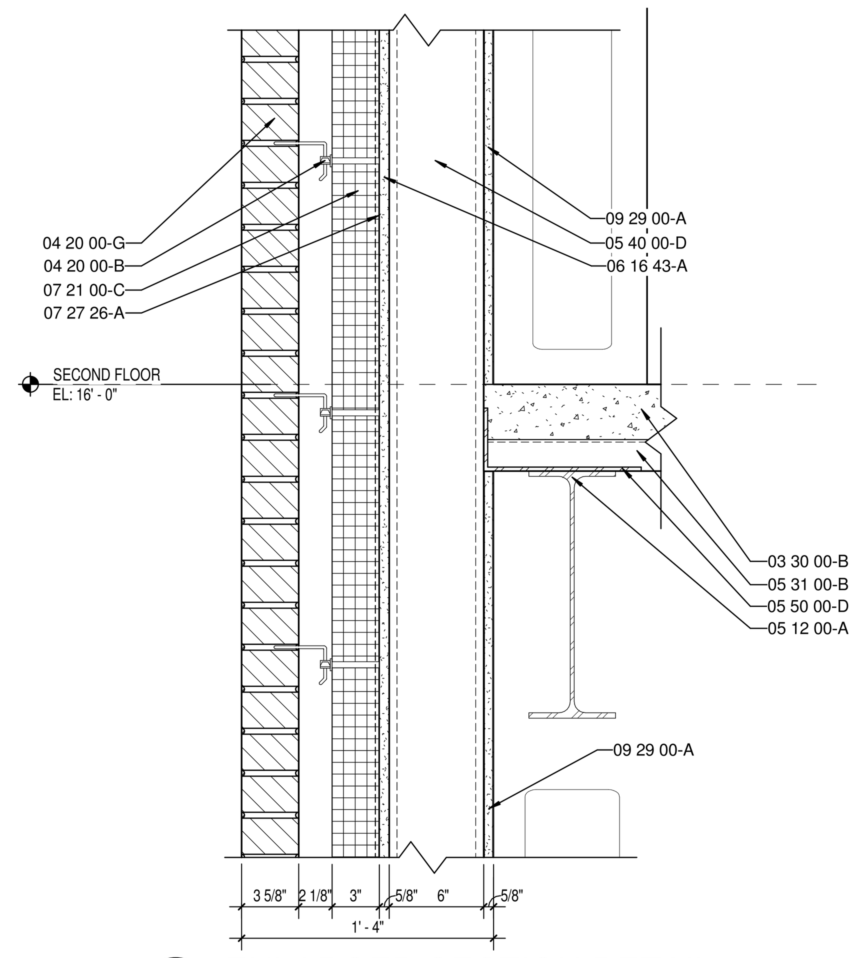

6 / A410 ENLARGED SECTION DETAIL
SCALE: 1 1/2" = 1'-0"

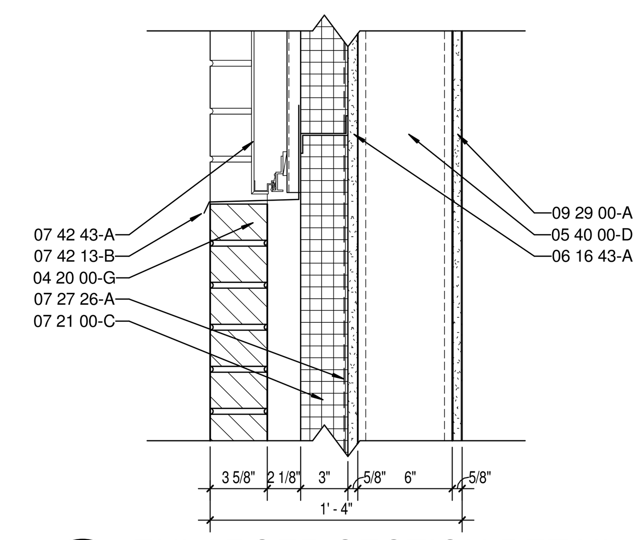

2 / A410 ENLARGED SECTION DETAIL
SCALE: 1 1/2" = 1'-0"

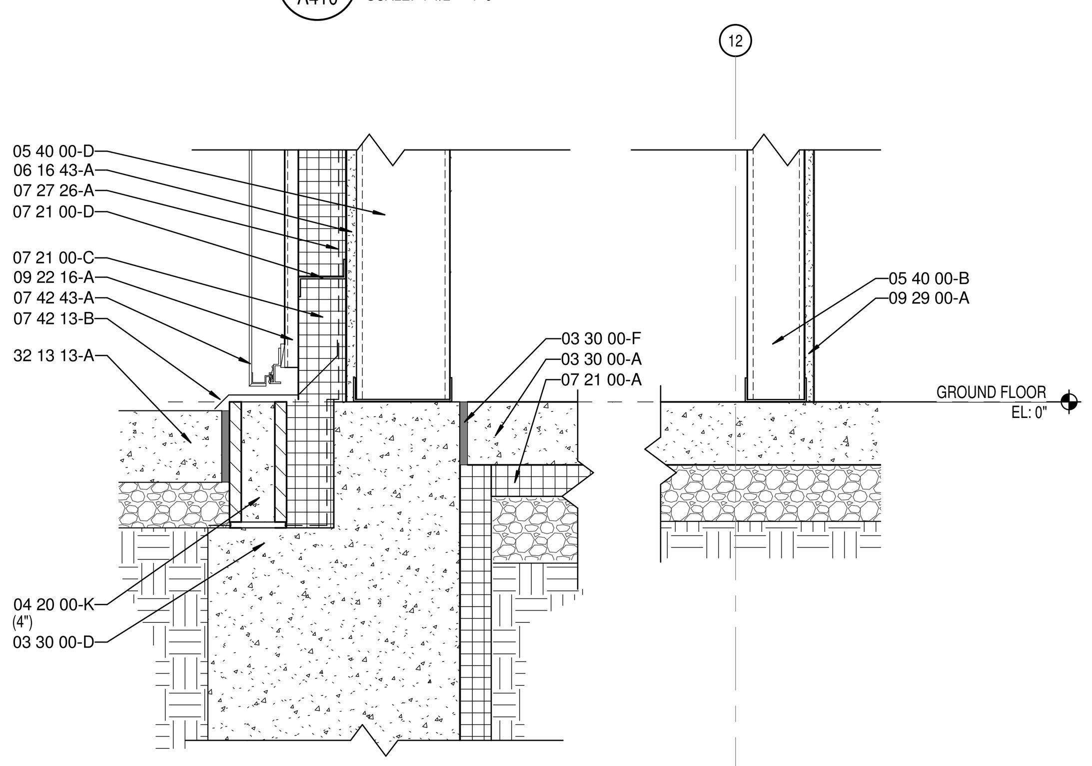

12 / A410 ENLARGED SECTION DETAIL
SCALE: 1 1/2" = 1'-0"

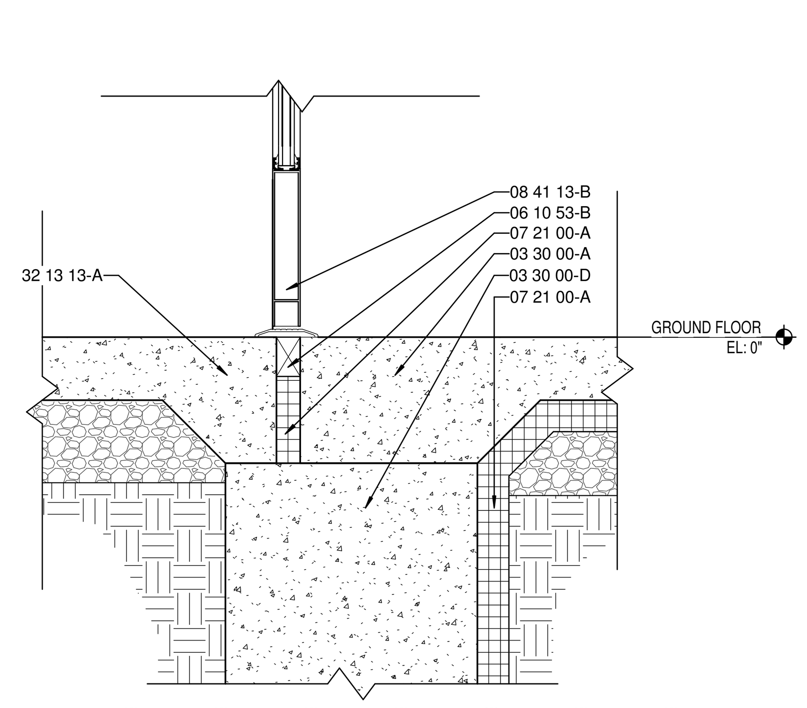

7 / A410 ENLARGED SECTION DETAIL
SCALE: 1 1/2" = 1'-0"

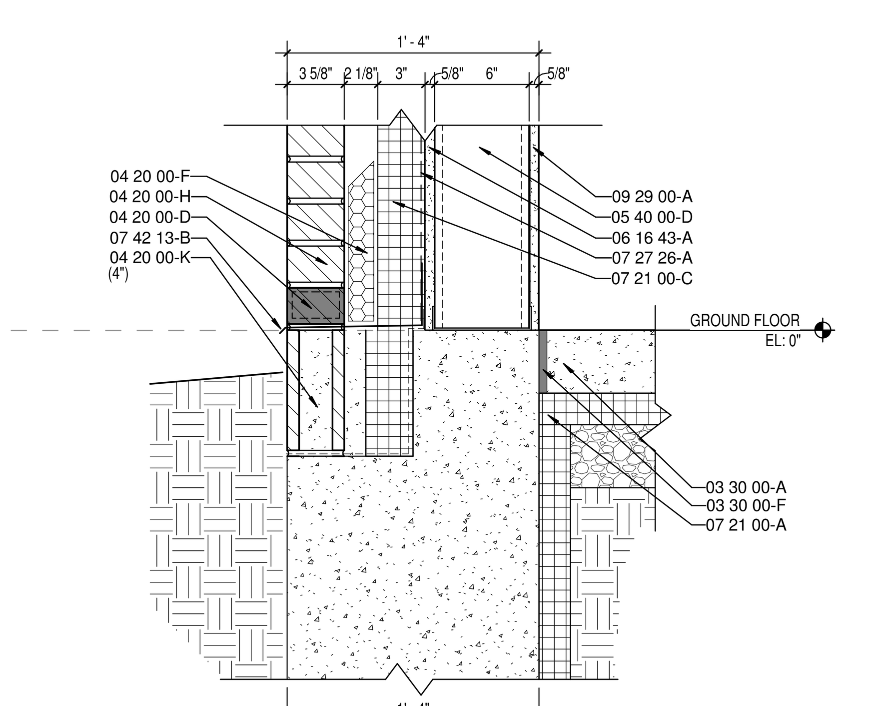

5 / A410 ENLARGED SECTION DETAIL
SCALE: 1 1/2" = 1'-0"

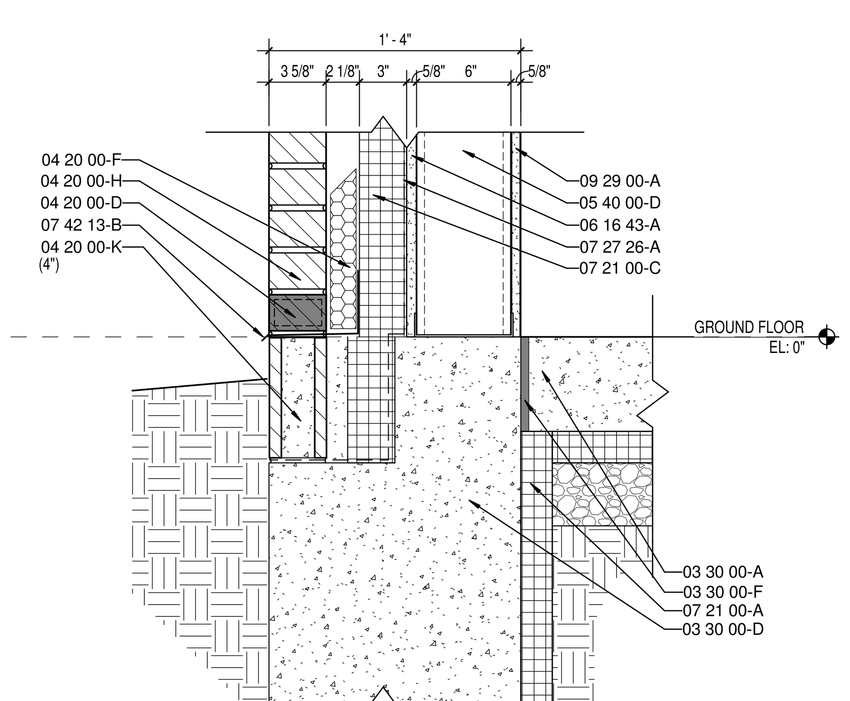

1 / A410 ENLARGED SECTION DETAIL
SCALE: 1 1/2" = 1'-0"

KEYNOTE LEGEND

03 30 00-A	CONCRETE SLAB OVER VAPOR BARRIER ON DRAINAGE FILL. SEE STRUCTURAL
03 30 00-B	CONCRETE SLAB ON METAL DECK- SEE STRUCTURAL
03 30 00-D	CONCRETE FOOTING- SEE STRUCTURAL
03 30 00-F	1/2" EXPANSION MATERIAL
04 20 00-A	GROUT SOLID
04 20 00-B	ADJUSTIBLE MASONRY VENEER ANCHOR AT 16" O.C. VERTICALLY
04 20 00-D	WEEP HOLES AT 16" O.C.
04 20 00-F	CAVITY DRAINAGE MATERIAL
04 20 00-G	BRICK TYPE 1
04 20 00-H	BRICK TYPE 2 (ACCENT)
04 20 00-I	CONCRETE MASONRY UNIT
04 20 00-J	BOND BEAM MASONRY UNIT
04 20 00-K	GROUND FACE CONCRETE MASONRY UNIT
05 12 00-A	STRUCTURAL STEEL FRAMING MEMBER- SEE STRUCTURAL
05 21 00-A	STEEL JOIST- SEE STRUCTURAL
05 21 00-B	STEEL JOIST GIRDER- SEE STRUCTURAL
05 31 00-A	METAL ROOF DECKING- SEE STRUCTURAL
05 31 00-B	METAL FLOOR DECKING- SEE STRUCTURAL
05 31 00-C	METAL DECK CLOSURE
05 40 00-B	3 5/8" 16 GA. MIN GALVANIZED STEEL STUD
05 40 00-D	6" 16 GA. MIN GALVANIZED STEEL STUD
05 40 00-G	12" 14 GA. MIN GALVANIZED STEEL STUD TRACK
05 50 00-A	MISCELLANEOUS STEEL - SEE STRUCTURAL
05 50 00-C	PAINTED STEEL BRICK LINTEL
05 50 00-D	STEEL SHELF ANGLE- SEE STRUCTURAL
05 51 00-A	CONCRETE FILLED METAL PAN TREAD AND RISER
05 51 00-B	STAIR METAL STRINGER- TUBE
05 51 00-C	STEEL TUBE LANDING SUPPORT
05 51 00-D	CONCRETE FILLED METAL PAN STAIR LANDING (SEALED)
05 51 00-E	PRECAST POLISHED CONCRETE TREAD (FINISH TO MATCH PC1 SEE A800 SERIES)
05 51 00-F	PRECAST POLISHED CONCRETE STAIR LANDING (FINISH TO MATCH PC1 SEE A800 SERIES)
05 52 13-A	1-1/4" I.D. STAINLESS STEEL PIPE RAILING
05 73 00-A	1-1/4" I.D. STAINLESS STEEL HANDRAIL
05 73 00-B	STAINLESS STEEL HANDRAIL BRACKET
05 73 00-C	STAINLESS STEEL CAP RAIL
05 73 00-D	CORE DRILL AND SET RAILING POST W/NON-SHRINK, NON-METALLIC GROUT
05 73 00-E	1/2" O.D. PAINTED STEEL BALUSTER
05 73 00-F	3/4" X 2" PAINTED STEEL POST
05 73 00-G	2" X 3" POST COVER FLANGE
06 10 53-A	1X WOOD BLOCKING
06 10 53-B	2X WOOD BLOCKING
06 16 00-A	3/4" EXTERIOR GRADE PLYWOOD
06 16 00-B	5/8" EXTERIOR GRADE PLYWOOD
06 16 43-A	5/8" EXTERIOR GYPSUM SHEATHING
06 40 00-A	SOLID PLASTIC SURFACE - 1/2" WINDOW STOOL
07 21 00-A	SLAB PERIMETER RIGID INSULATION (R-15 FOR 24" HORZ. & VERT.)
07 21 00-B	PACK FULL WITH MINERAL WOOL BATT INSULATION
07 21 00-C	3" CAVITY WALL EXTRUDED POLYSTYRENE INSULATION (R-16.8)
07 21 00-D	THERMALLY BROKEN Z-CLIPS @ 16" O.C. VERTICALLY
07 21 00-E	SPRAY APPLIED THERMAL INSULATION (R-20)
07 21 00-F	MINERAL WOOL BATT INSULATION
07 24 15-A	DIRECT APPLIED FINISH SYSTEM (DAFS)- UN-INSULATED SOFFIT
07 25 00-A	WEATHER RESISTIVE BARRIERS- BUILDING WRAP
07 27 26-A	FLUID APPLIED MEMBRANE AIR BARRIER
07 42 13-A	PRE-FINISHED METAL WALL PANEL
07 42 13-B	FLASHING
07 42 13-C	TRIM
07 42 43-A	COMPOSITE METAL WALL PANEL
07 42 43-B	HAT CHANNEL - SEE SECTIONS FOR DEPTH
07 42 43-D	COMPOSITE METAL SOFFIT
07 54 19-A	POLYVINYL-CHLORIDE MEMBRANE (PVC) ROOFING SYSTEM
07 54 19-B	MEMBRANE ROOFING - EXTEND OVER AND ATTACH TO FRONT FACE OF PARAPET
07 54 19-C	2 LAYERS OF 2" POLYISO INSULATION BOARD (R-26)
07 54 19-D	1/2" COVER BOARD
07 54 19-E	TAPERED POLYISO INSULATION BOARD
07 71 00-A	MANUFACTURED COPING
07 71 00-B	MANUFACTURED GRAVEL STOP
07 92 00-A	BACKER ROD AND SEALANT
07 92 00-B	SEALANT EACH SIDE, TYPICAL
07 92 00-C	SEALANT
07 92 00-D	BACKER ROD AND SEALANT EACH SIDE, TYPICAL
08 11 13-A	HOLLOW METAL DOOR
08 11 13-B	HOLLOW METAL DOOR/BORROWED LIGHT FRAME
08 14 16-A	FLUSH WOOD DOOR
08 33 23-A	OVERHEAD COILING DOOR
08 41 13-A	4 1/2" ALUMINUM-FRAMED STOREFRONT
08 41 13-B	ALUMINUM ENTRANCE DOOR
08 41 13-C	ALUMINUM BRAKE METAL TO MATCH STOREFRONT FRAME
08 44 13-A	7 1/2" DEEP ALUMINUM CURTAINWALL SYSTEM
08 44 13-B	CURTAINWALL ATTACHMENT MEMBER, ALLOW FOR THERMAL MOVEMENT
08 80 00-A	GLAZING - SEE SCHEDULE/ELEVATIONS
09 22 16-A	7/8" FURRING CHANNEL
09 22 16-B	3 5/8" STEEL STUD
09 22 16-C	6" STEEL STUD
09 22 16-E	METAL STUD KICKERS AS REQUIRED
09 22 16-F	10" STEEL STUD
09 29 00-A	5/8" GYPSUM WALL BOARD (SEE SPECS FOR TYPE)
09 29 00-C	SUSPENDED GYPSUM BOARD CEILING ASSEMBLY
09 29 00-D	METAL J- MOULD
09 51 13-A	ACOUSTICAL CEILING SUSPENSION ASSEMBLY
31 20 00-A	FINISH GRADE- SEE CIVIL SHEETS
32 13 13-A	SIDEWALK- SEE CIVIL SHEETS

MADE @ PLAINFIELD

CSO
8831 Keystone Crossing, Indianapolis, IN 46240
317.848.7800 | csoinc.net
© 2018 CSO Architects, Inc. All Rights Reserved

PROJECT:
TOWN OF PLAINFIELD
MADE@ PLAINFIELD
Red Pride Drive, Plainfield, IN 46168

SCOPE DRAWINGS:
These drawings indicate the general scope of the project in terms of architectural design concept, the dimensions of the building, the major architectural elements and the type of structural, mechanical and electrical systems.
The drawings do not necessarily indicate or describe all work required for full performance and completion of the requirements of the Contract.
On the basis of the general scope indicated or described, the trade contractors shall furnish all items required for the proper execution and completion of the work.

REVISIONS:

1	BP #1 ADD. #1	01-30-20

ISSUE DATE	DRAWN BY	CHECKED BY
01/30/20	BSN	JRF

DRAWING TITLE:
ENLARGED SECTION DETAILS

CERTIFIED BY:
BID PACK 1 NOT FOR CONSTRUCTION

DRAWING NUMBER
A410

PROJECT NUMBER
19004

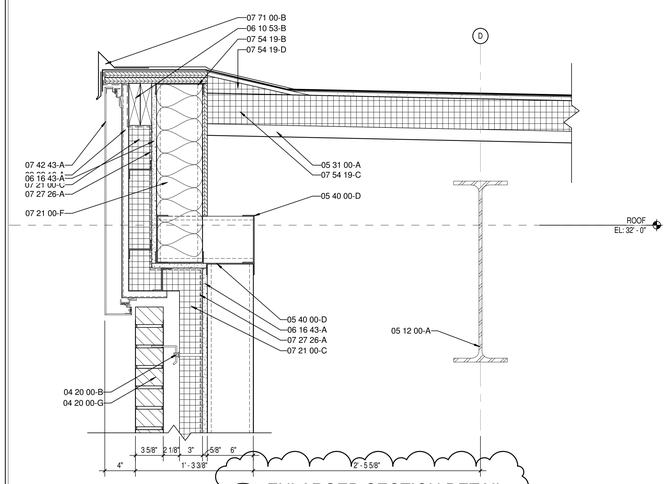

9 A411 ENLARGED SECTION DETAIL
SCALE: 1 1/2" = 1'-0"

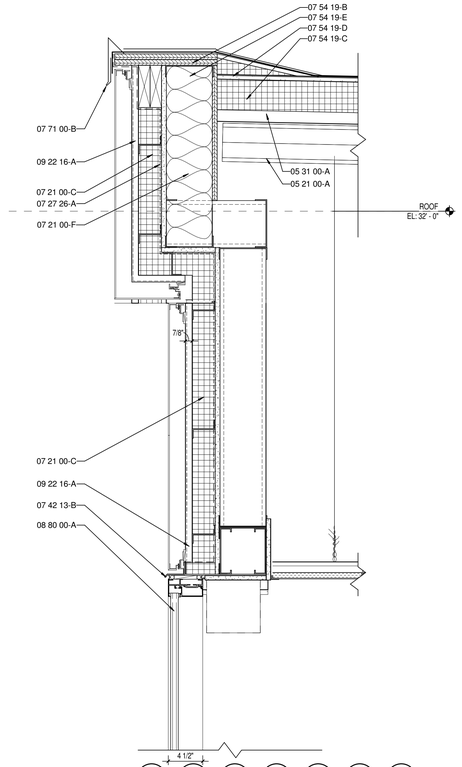

6 A411 ENLARGED SECTION DETAIL
SCALE: 1 1/2" = 1'-0"

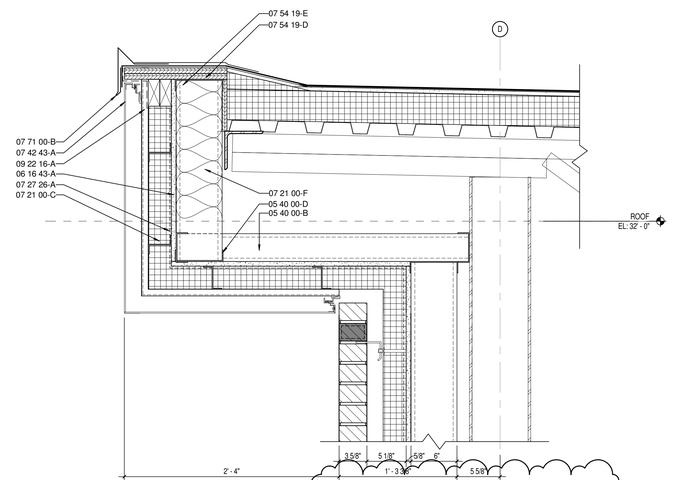

3 A411 ENLARGED SECTION DETAIL
SCALE: 1 1/2" = 1'-0"

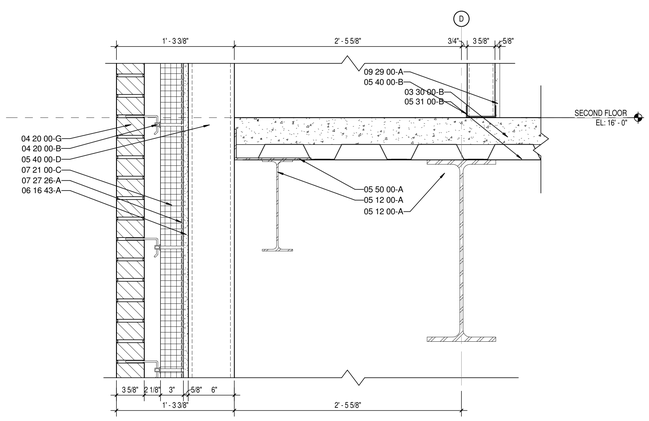

8 A411 ENLARGED SECTION DETAIL
SCALE: 1 1/2" = 1'-0"

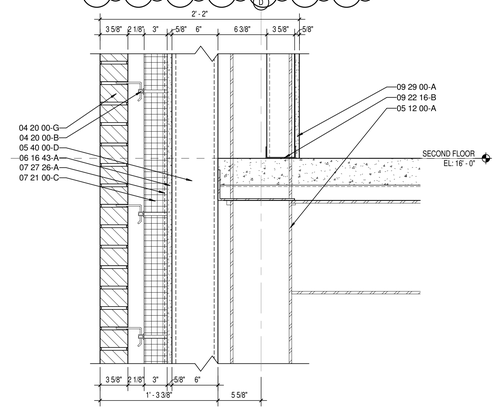

2 A411 ENLARGED SECTION DETAIL
SCALE: 1 1/2" = 1'-0"

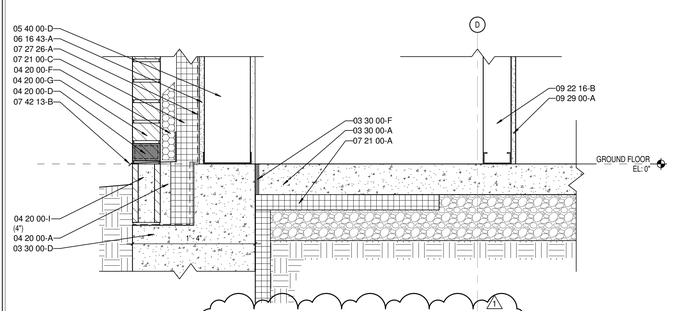

7 A411 ENLARGED SECTION DETAIL
SCALE: 1 1/2" = 1'-0"

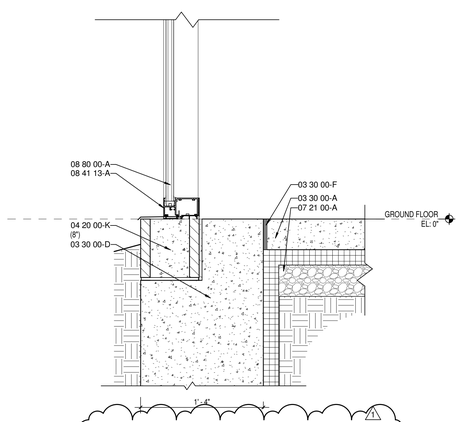

4 A411 ENLARGED SECTION DETAIL
SCALE: 1 1/2" = 1'-0"

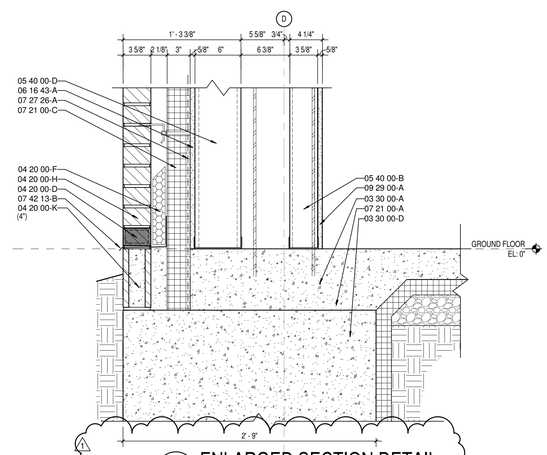

1 A411 ENLARGED SECTION DETAIL
SCALE: 1 1/2" = 1'-0"

KEYNOTE LEGEND

03 30 00-A	CONCRETE SLAB OVER VAPOR BARRIER ON DRAINAGE FILL. SEE STRUCTURAL
03 30 00-B	CONCRETE SLAB ON METAL DECK- SEE STRUCTURAL
03 30 00-D	CONCRETE FOOTING- SEE STRUCTURAL
03 30 00-F	1/2" EXPANSION MATERIAL
04 20 00-A	GROUT SOLID
04 20 00-B	ADJUSTIBLE MASONRY VENEER ANCHOR AT 16" O.C. VERTICALLY
04 20 00-D	WEEP HOLES AT 16" O.C.
04 20 00-F	CAVITY DRAINAGE MATERIAL
04 20 00-G	BRICK TYPE 1
04 20 00-H	BRICK TYPE 2 (ACCENT)
04 20 00-I	CONCRETE MASONRY UNIT
04 20 00-J	BOND BEAM MASONRY UNIT
04 20 00-K	GROUND FACE CONCRETE MASONRY UNIT
05 12 00-A	STRUCTURAL STEEL FRAMING MEMBER- SEE STRUCTURAL
05 21 00-A	STEEL JOIST- SEE STRUCTURAL
05 21 00-B	STEEL JOIST GIRDER- SEE STRUCTURAL
05 31 00-A	METAL ROOF DECKING- SEE STRUCTURAL
05 31 00-B	METAL FLOOR DECKING- SEE STRUCTURAL
05 31 00-C	METAL DECK CLOSURE
05 40 00-B	3 5/8" 16 GA. MIN GALVANIZED STEEL STUD
05 40 00-D	6" 16 GA. MIN GALVANIZED STEEL STUD
05 40 00-G	12" 14 GA. MIN GALVANIZED STEEL STUD TRACK
05 50 00-A	MISCELLANEOUS STEEL - SEE STRUCTURAL
05 50 00-C	PAINTED STEEL BRICK LINTEL
05 50 00-D	STEEL SHELF ANGLE- SEE STRUCTURAL
05 51 00-A	CONCRETE FILLED METAL PAN TREAD AND RISER
05 51 00-B	STAIR METAL STRINGER- TUBE
05 51 00-C	STEEL TUBE LANDING SUPPORT
05 51 00-D	CONCRETE FILLED METAL PAN STAIR LANDING (SEALED)
05 51 00-E	PRECAST POLISHED CONCRETE TREAD (FINISH TO MATCH PC1 SEE A800 SERIES)
05 51 00-F	PRECAST POLISHED CONCRETE STAIR LANDING (FINISH TO MATCH PC1 SEE A800 SERIES)
05 52 13-A	1-1/4" I.D. STAINLESS STEEL PIPE RAILING
05 73 00-A	1-1/4" I.D. STAINLESS STEEL HANDRAIL
05 73 00-B	STAINLESS STEEL HANDRAIL BRACKET
05 73 00-C	STAINLESS STEEL CAP RAIL
05 73 00-D	CORE DRILL AND SET RAILING POST W/NON-SHRINK, NON-METALLIC GROUT
05 73 00-E	1/2" O.D. PAINTED STEEL BALUSTER
05 73 00-F	3/4" X 2" PAINTED STEEL POST
05 73 00-G	2" X 3" POST COVER FLANGE
06 10 53-A	1X WOOD BLOCKING
06 10 53-B	2X WOOD BLOCKING
06 16 00-A	3/4" EXTERIOR GRADE PLYWOOD
06 16 00-B	5/8" EXTERIOR GRADE PLYWOOD
06 16 43-A	5/8" EXTERIOR GYPSUM SHEATHING
06 40 00-A	SOLID PLASTIC SURFACE - 1/2" WINDOW STOOL
07 21 00-A	SLAB PERIMETER RIGID INSULATION (R-15 FOR 24" HORZ. & VERT.)
07 21 00-B	PACK FULL WITH MINERAL WOOL BATT INSULATION
07 21 00-C	3" CAVITY WALL EXTRUDED POLYSTYRENE INSULATION (R-16.8)
07 21 00-D	THERMALLY BROKEN Z-CLIPS @ 16" O.C. VERTICALLY
07 21 00-E	SPRAY APPLIED THERMAL INSULATION (R-20)
07 21 00-F	MINERAL WOOL BATT INSULATION
07 24 15-A	DIRECT APPLIED FINISH SYSTEM (DAFS)- UN-INSULATED SOFFIT
07 25 00-A	WEATHER RESISTIVE BARRIERS- BUILDING WRAP
07 27 26-A	FLUID APPLIED MEMBRANE AIR BARRIER
07 42 13-A	PRE-FINISHED METAL WALL PANEL
07 42 13-B	FLASHING
07 42 13-C	TRIM
07 42 43-A	COMPOSITE METAL WALL PANEL
07 42 43-B	HAT CHANNEL - SEE SECTIONS FOR DEPTH
07 42 43-D	COMPOSITE METAL SOFFIT
07 54 19-A	POLYVINYL-CHLORIDE MEMBRANE (PVC) ROOFING SYSTEM
07 54 19-B	MEMBRANE ROOFING - EXTEND OVER AND ATTACH TO FRONT FACE OF PARAPET
07 54 19-C	2 LAYERS OF 2" POLYISO INSULATION BOARD (R-26)
07 54 19-D	1/2" COVER BOARD
07 54 19-E	TAPERED POLYISO INSULATION BOARD
07 71 00-A	MANUFACTURED COPING
07 71 00-B	MANUFACTURED GRAVEL STOP
07 92 00-A	BACKER ROD AND SEALANT
07 92 00-B	SEALANT EACH SIDE, TYPICAL
07 92 00-C	SEALANT
07 92 00-D	BACKER ROD AND SEALANT EACH SIDE, TYPICAL
08 11 13-A	HOLLOW METAL DOOR
08 11 13-B	HOLLOW METAL DOOR/BORROWED LIGHT FRAME
08 14 16-A	FLUSH WOOD DOOR
08 33 23-A	OVERHEAD COILING DOOR
08 41 13-A	4 1/2" ALUMINUM-FRAMED STOREFRONT
08 41 13-B	ALUMINUM ENTRANCE DOOR
08 41 13-C	ALUMINUM BRAKE METAL TO MATCH STOREFRONT FRAME
08 44 13-A	7 1/2" DEEP ALUMINUM CURTAINWALL SYSTEM
08 44 13-B	CURTAINWALL ATTACHMENT MEMBER, ALLOW FOR THERMAL MOVEMENT
08 80 00-A	GLAZING - SEE SCHEDULE/ELEVATIONS
09 22 16-A	7/8" FURRING CHANNEL
09 22 16-B	3 5/8" STEEL STUD
09 22 16-C	6" STEEL STUD
09 22 16-E	METAL STUD KICKERS AS REQUIRED
09 22 16-F	10" STEEL STUD
09 29 00-A	5/8" GYPSUM WALL BOARD (SEE SPECS FOR TYPE)
09 29 00-C	SUSPENDED GYPSUM BOARD CEILING ASSEMBLY
09 29 00-D	METAL J- MOULD
09 51 13-A	ACOUSTICAL CEILING SUSPENSION ASSEMBLY
31 20 00-A	FINISH GRADE- SEE CIVIL SHEETS
32 13 13-A	SIDEWALK- SEE CIVIL SHEETS

CSO
8831 Keystone Crossing, Indianapolis, IN 46240
317.848.7600 | csoinc.net
© 2019 CSO Architects, Inc. All Rights Reserved

PROJECT:
TOWN OF PLAINFIELD
MADE@ PLAINFIELD
Red Pride Drive, Plainfield, IN 46168

SCOPE DRAWINGS:
These drawings indicate the general scope of the project in sufficient detail to describe the general arrangement of the building, the major architectural elements and the type of structural, mechanical and electrical systems.
The Contract Documents are intended to describe all work required for full performance and completion of the requirements of the Contract.
On the basis of the general scope indicated or described, the trade contractors shall furnish all items required for the proper execution and completion of the work.

REVISIONS:
1 BP #1 ADD. #1 01-30-20

ISSUE DATE	DRAWN BY	CHECKED BY
01/30/20	BSN	JRF

DRAWING TITLE:
ENLARGED SECTION DETAILS

CERTIFIED BY:
BID PACK 1
NOT FOR CONSTRUCTION

DRAWING NUMBER
A411

PROJECT NUMBER
19004

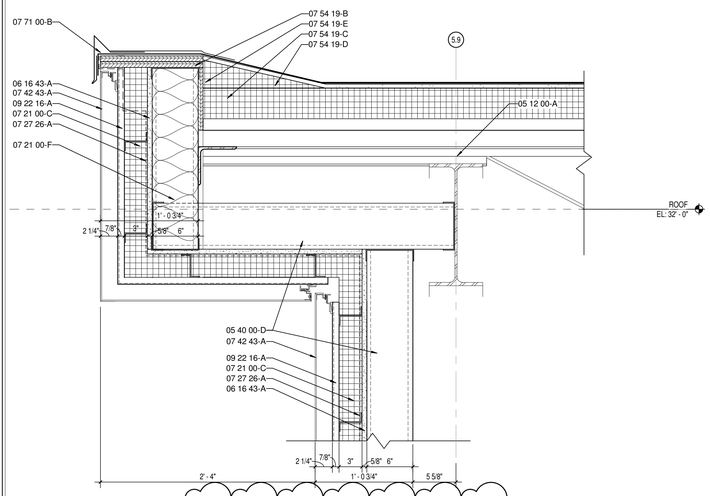

10 A412 ENLARGED SECTION DETAIL
SCALE: 1 1/2" = 1'-0"

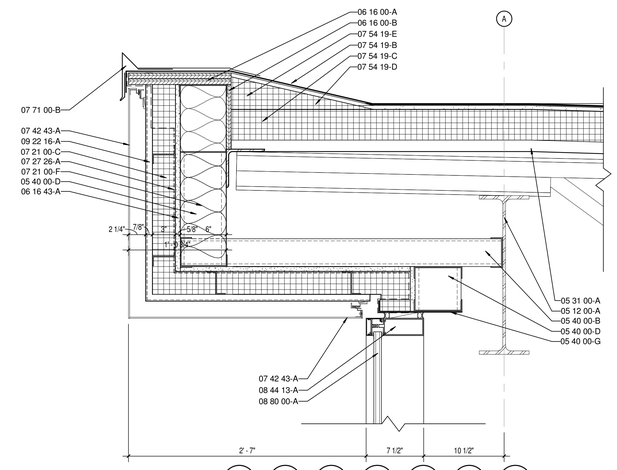

3 A412 ENLARGED SECTION DETAIL
SCALE: 1 1/2" = 1'-0"

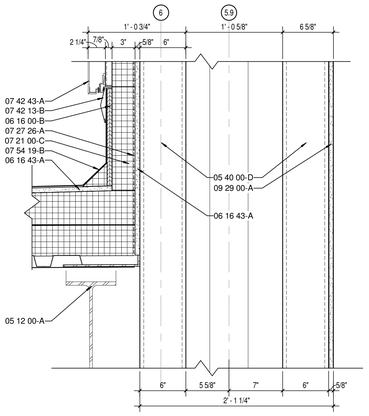

9 A412 ENLARGED SECTION DETAIL
SCALE: 1 1/2" = 1'-0"

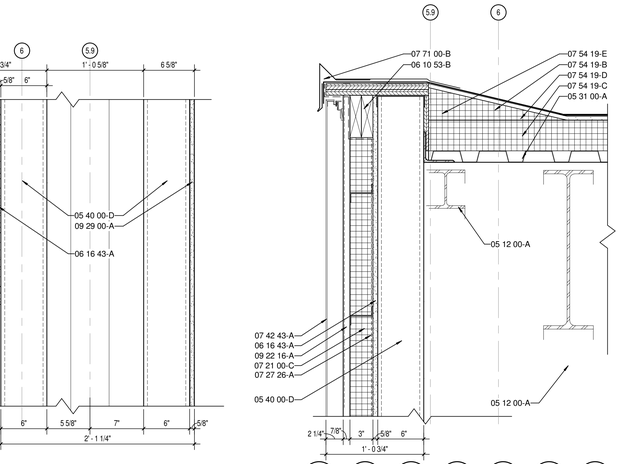

7 A412 ENLARGED SECTION DETAIL
SCALE: 1 1/2" = 1'-0"

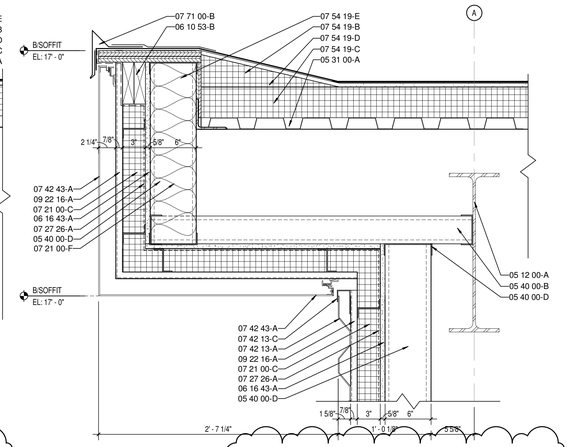

5 A412 ENLARGED SECTION DETAIL
SCALE: 1 1/2" = 1'-0"

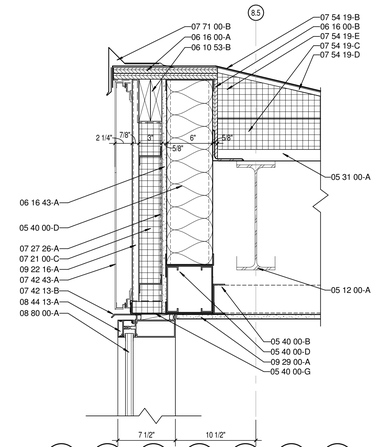

2 A412 ENLARGED SECTION DETAIL
SCALE: 1 1/2" = 1'-0"

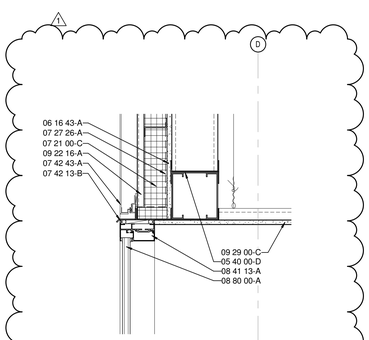

8 A412 ENLARGED SECTION DETAIL
SCALE: 1 1/2" = 1'-0"

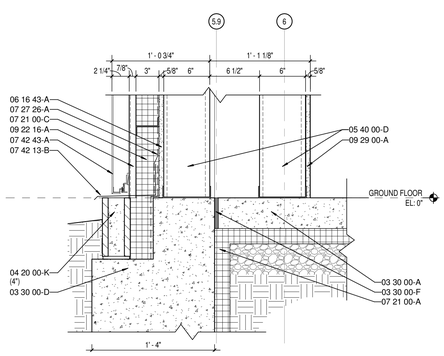

6 A412 ENLARGED SECTION DETAIL
SCALE: 1 1/2" = 1'-0"

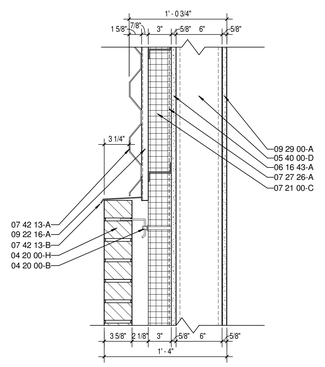

4 A412 ENLARGED SECTION DETAIL
SCALE: 1 1/2" = 1'-0"

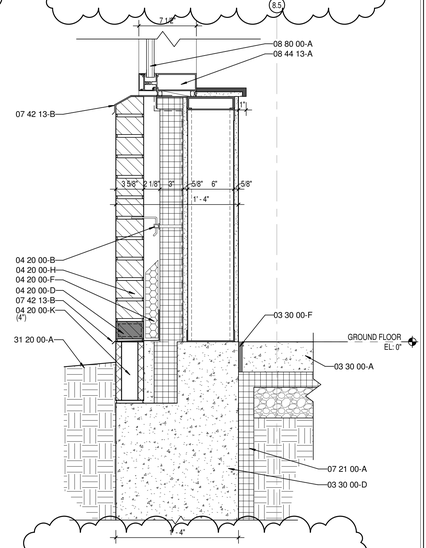

1 A412 ENLARGED SECTION DETAIL
SCALE: 1 1/2" = 1'-0"

KEYNOTE LEGEND

03 30 00-A	CONCRETE SLAB OVER VAPOR BARRIER ON DRAINAGE FILL. SEE STRUCTURAL
03 30 00-B	CONCRETE SLAB ON METAL DECK- SEE STRUCTURAL
03 30 00-D	CONCRETE FOOTING- SEE STRUCTURAL
03 30 00-F	1/2" EXPANSION MATERIAL
04 20 00-A	GROUT SOLID
04 20 00-B	ADJUSTIBLE MASONRY VENEER ANCHOR AT 16" O.C. VERTICALLY
04 20 00-D	WEEP HOLES AT 16" O.C.
04 20 00-F	CAVITY DRAINAGE MATERIAL
04 20 00-G	BRICK TYPE 1
04 20 00-H	BRICK TYPE 2 (ACCENT)
04 20 00-I	CONCRETE MASONRY UNIT
04 20 00-J	BOND BEAM MASONRY UNIT
04 20 00-K	GROUND FACE CONCRETE MASONRY UNIT
05 12 00-A	STRUCTURAL STEEL FRAMING MEMBER- SEE STRUCTURAL
05 21 00-A	STEEL JOIST- SEE STRUCTURAL
05 21 00-B	STEEL JOIST GIRDER- SEE STRUCTURAL
05 31 00-A	METAL ROOF DECKING- SEE STRUCTURAL
05 31 00-B	METAL FLOOR DECKING- SEE STRUCTURAL
05 31 00-C	METAL DECK CLOSURE
05 40 00-B	3 5/8" 16 GA. MIN GALVANIZED STEEL STUD
05 40 00-D	6" 16 GA. MIN GALVANIZED STEEL STUD
05 40 00-G	12" 14 GA. MIN GALVANIZED STEEL STUD TRACK
05 50 00-A	MISCELLANEOUS STEEL - SEE STRUCTURAL
05 50 00-C	PAINTED STEEL BRICK LINTEL
05 50 00-D	STEEL SHELF ANGLE- SEE STRUCTURAL
05 51 00-A	CONCRETE FILLED METAL PAN TREAD AND RISER
05 51 00-B	STAIR METAL STRINGER- TUBE
05 51 00-C	STEEL TUBE LANDING SUPPORT
05 51 00-D	CONCRETE FILLED METAL PAN STAIR LANDING (SEALED)
05 51 00-E	PRECAST POLISHED CONCRETE TREAD (FINISH TO MATCH PC1 SEE A800 SERIES)
05 51 00-F	PRECAST POLISHED CONCRETE STAIR LANDING (FINISH TO MATCH PC1 SEE A800 SERIES)
05 52 13-A	1-1/4" I.D. STAINLESS STEEL PIPE RAILING
05 73 00-A	1-1/4" I.D. STAINLESS STEEL HANDRAIL
05 73 00-B	STAINLESS STEEL HANDRAIL BRACKET
05 73 00-C	STAINLESS STEEL CAP RAIL
05 73 00-D	CORE DRILL AND SET RAILING POST W/NON-SHRINK, NON-METALLIC GROUT
05 73 00-E	1/2" O.D. PAINTED STEEL BALUSTER
05 73 00-F	3/4" X 2" PAINTED STEEL POST
05 73 00-G	2" X 3" POST COVER FLANGE
06 10 53-A	1X WOOD BLOCKING
06 10 53-B	2X WOOD BLOCKING
06 16 00-A	3/4" EXTERIOR GRADE PLYWOOD
06 16 00-B	5/8" EXTERIOR GRADE PLYWOOD
06 16 43-A	5/8" EXTERIOR GYPSUM SHEATHING
06 40 00-A	SOLID PLASTIC SURFACE - 1/2" WINDOW STOOL
07 21 00-A	SLAB PERIMETER RIGID INSULATION (R-15 FOR 24" HORZ. & VERT.)
07 21 00-B	PACK FULL WITH MINERAL WOOL BATT INSULATION
07 21 00-C	3" CAVITY WALL EXTRUDED POLYSTYRENE INSULATION (R-16.8)
07 21 00-D	THERMALLY BROKEN Z-CLIPS @ 16" O.C. VERTICALLY
07 21 00-E	SPRAY APPLIED THERMAL INSULATION (R-20)
07 21 00-F	MINERAL WOOL BATT INSULATION
07 24 15-A	DIRECT APPLIED FINISH SYSTEM (DAFS)- UN-INSULATED SOFFIT
07 25 00-A	WEATHER RESISTIVE BARRIERS- BUILDING WRAP
07 27 26-A	FLUID APPLIED MEMBRANE AIR BARRIER
07 42 13-A	PRE-FINISHED METAL WALL PANEL
07 42 13-B	FLASHING
07 42 13-C	TRIM
07 42 43-A	COMPOSITE METAL WALL PANEL
07 42 43-B	HAT CHANNEL - SEE SECTIONS FOR DEPTH
07 42 43-D	COMPOSITE METAL SOFFIT
07 54 19-A	POLYVINYL-CHLORIDE MEMBRANE (PVC) ROOFING SYSTEM
07 54 19-B	MEMBRANE ROOFING - EXTEND OVER AND ATTACH TO FRONT FACE OF PARAPET
07 54 19-C	2 LAYERS OF 2" POLYISO INSULATION BOARD (R-26)
07 54 19-D	1/2" COVER BOARD
07 54 19-E	TAPERED POLYISO INSULATION BOARD
07 71 00-A	MANUFACTURED COPING
07 71 00-B	MANUFACTURED GRAVEL STOP
07 92 00-A	BACKER ROD AND SEALANT
07 92 00-B	SEALANT EACH SIDE, TYPICAL
07 92 00-C	SEALANT
07 92 00-D	BACKER ROD AND SEALANT EACH SIDE, TYPICAL
08 11 13-A	HOLLOW METAL DOOR
08 11 13-B	HOLLOW METAL DOOR/BORROWED LIGHT FRAME
08 14 16-A	FLUSH WOOD DOOR
08 33 23-A	OVERHEAD COILING DOOR
08 41 13-A	4 1/2" ALUMINUM-FRAMED STOREFRONT
08 41 13-B	ALUMINUM ENTRANCE DOOR
08 41 13-C	ALUMINUM BRAKE METAL TO MATCH STOREFRONT FRAME
08 44 13-A	7 1/2" DEEP ALUMINUM CURTAINWALL SYSTEM
08 44 13-B	CURTAINWALL ATTACHMENT MEMBER, ALLOW FOR THERMAL MOVEMENT
08 80 00-A	GLAZING - SEE SCHEDULE/ELEVATIONS
09 22 16-A	7/8" FURRING CHANNEL
09 22 16-B	3 5/8" STEEL STUD
09 22 16-C	6" STEEL STUD
09 22 16-E	METAL STUD KICKERS AS REQUIRED
09 22 16-F	10" STEEL STUD
09 29 00-A	5/8" GYPSUM WALL BOARD (SEE SPECS FOR TYPE)
09 29 00-C	SUSPENDED GYPSUM BOARD CEILING ASSEMBLY
09 29 00-D	METAL J- MOULD
09 51 13-A	ACOUSTICAL CEILING SUSPENSION ASSEMBLY
31 20 00-A	FINISH GRADE- SEE CIVIL SHEETS
32 13 13-A	SIDEWALK- SEE CIVIL SHEETS

MADE @ PLAINFIELD

CSO
8831 Keystone Crossing, Indianapolis, IN 46240
317.848.7600 | csoinc.net
© 2019 CSO Architects, Inc. All Rights Reserved

PROJECT:
TOWN OF PLAINFIELD
MADE@ PLAINFIELD
Red Pride Drive, Plainfield, IN 46168

SCOPE DRAWINGS:
These drawings indicate the general scope of the project in terms of architectural design concept, the dimensions of the building, the major architectural elements and the type of construction and finishes to be incorporated in the work.
The drawings do not necessarily indicate or describe all work required for full performance and completion of the work under the contract.
On the basis of the general scope indicated or described, the trade contractors shall furnish all items required for the proper execution and completion of the work.

REVISIONS:
1 BP #1 ADD. #1 01-30-20

ISSUE DATE	DRAWN BY	CHECKED BY
01/30/20	BSN	JRF

DRAWING TITLE:
ENLARGED SECTION DETAILS

CERTIFIED BY:
BID PACK 1
NOT FOR CONSTRUCTION

DRAWING NUMBER
A412

PROJECT NUMBER
19004

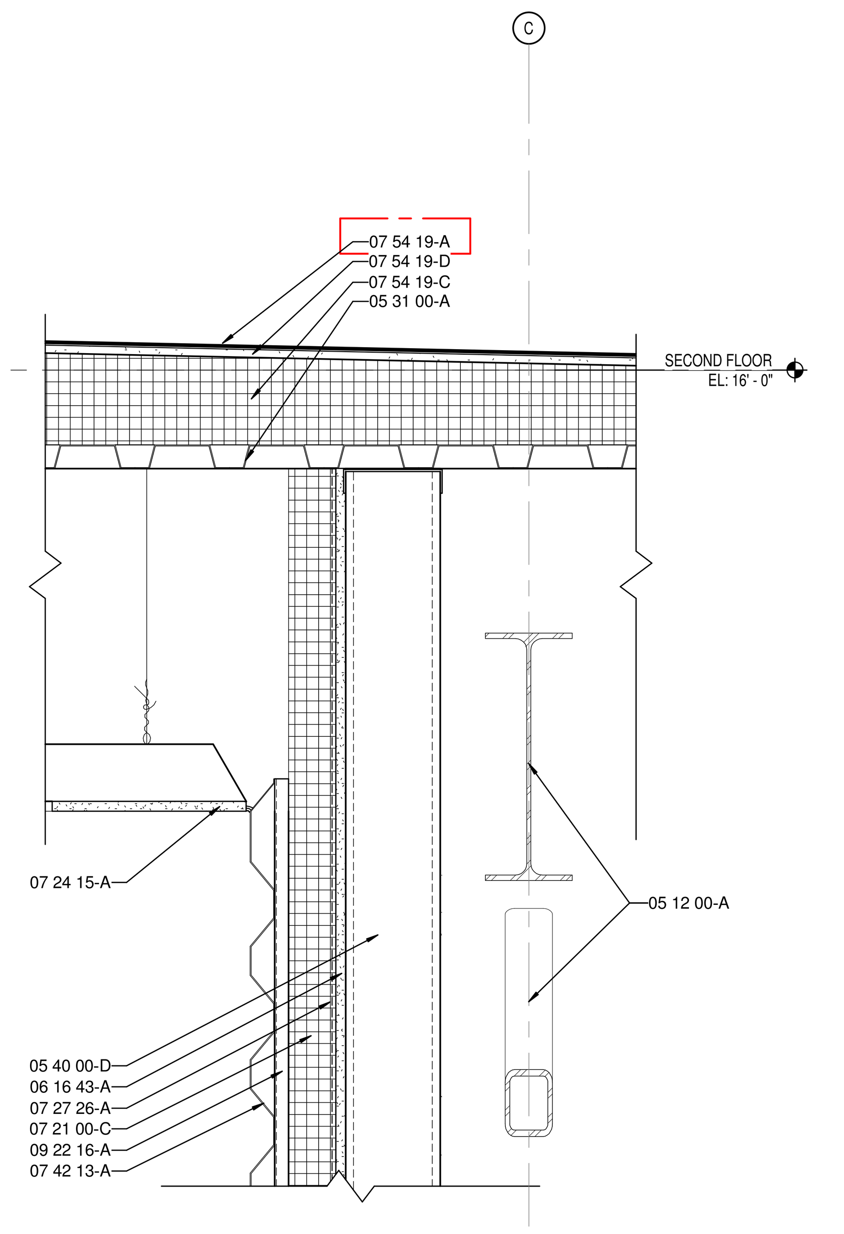

5 A413 ENLARGED SECTION DETAIL
SCALE: 1 1/2" = 1'-0"

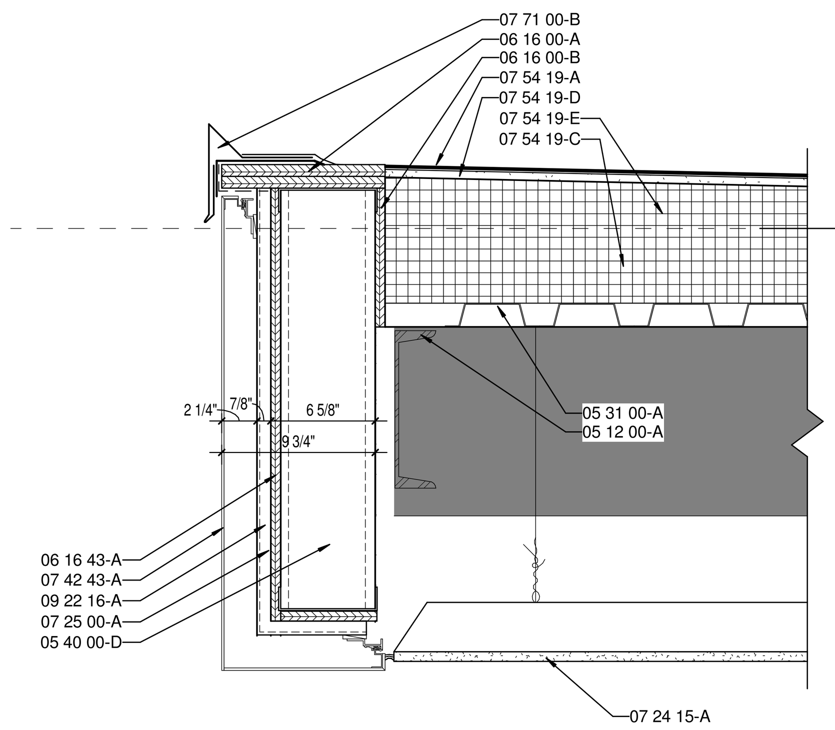

9 A413 ENLARGED SECTION DETAIL
SCALE: 1 1/2" = 1'-0"

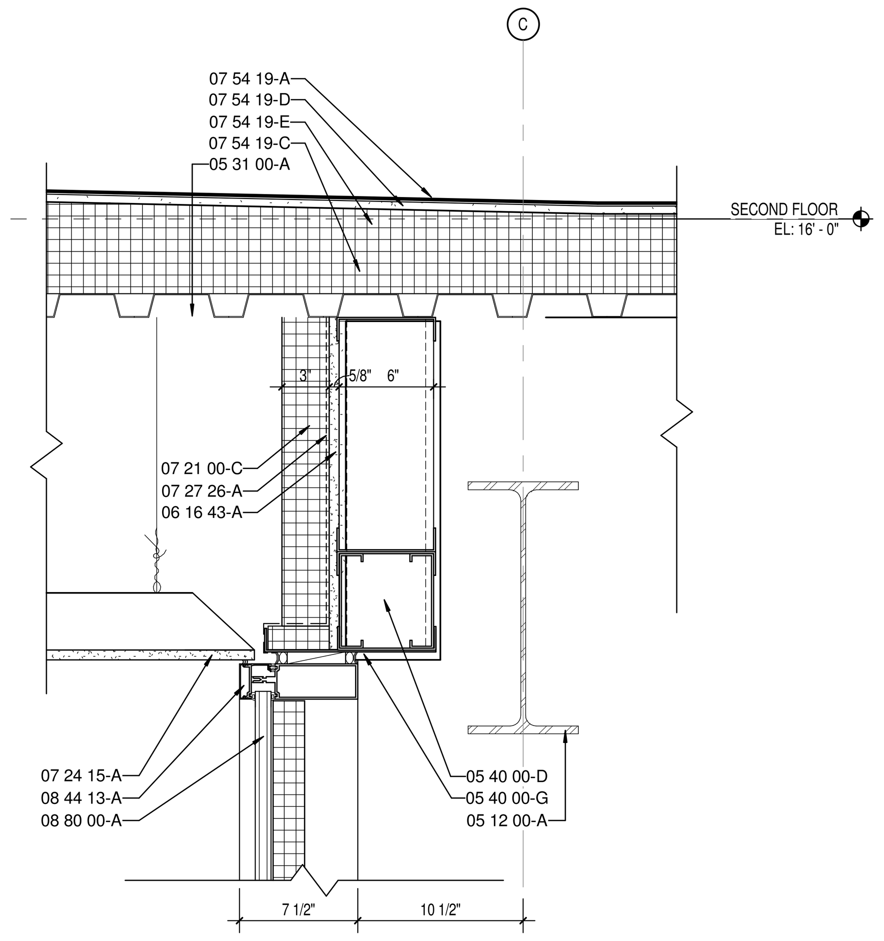

8 A413 ENLARGED SECTION DETAIL
SCALE: 1 1/2" = 1'-0"

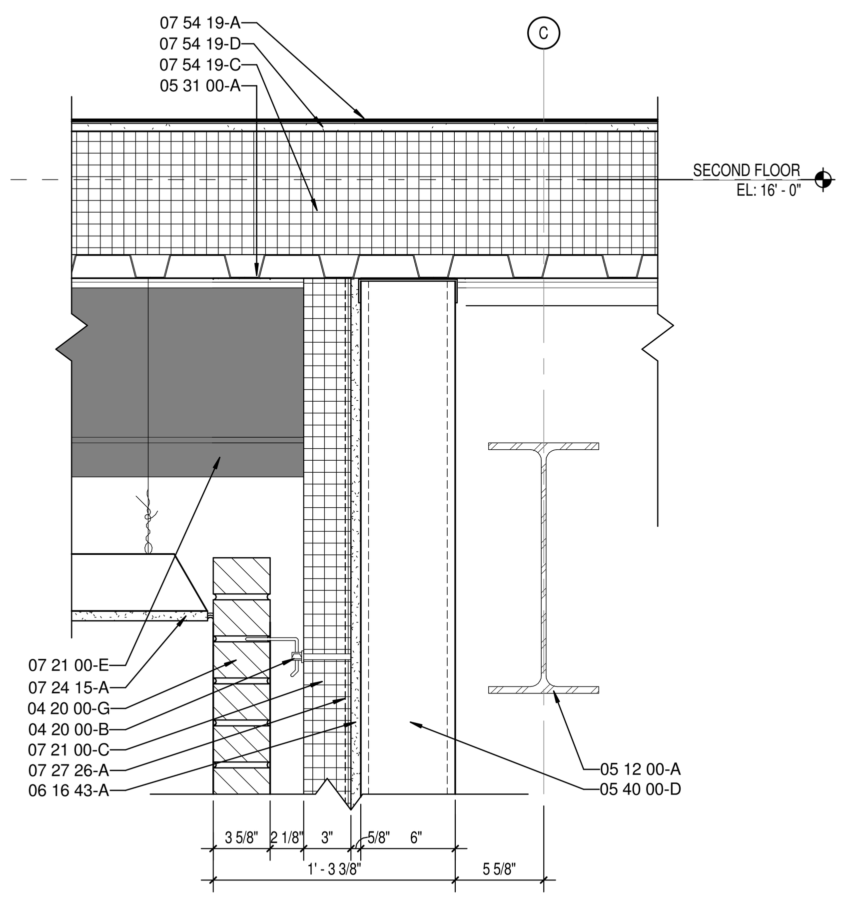

11 A413 ENLARGED SECTION DETAIL
SCALE: 1 1/2" = 1'-0"

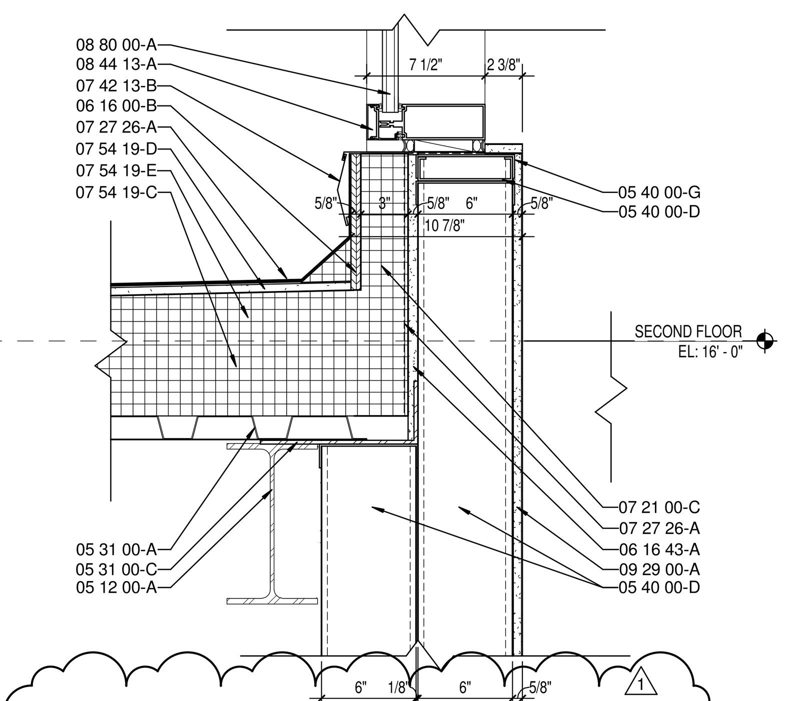

6 A413 ENLARGED SECTION DETAIL
SCALE: 1 1/2" = 1'-0"

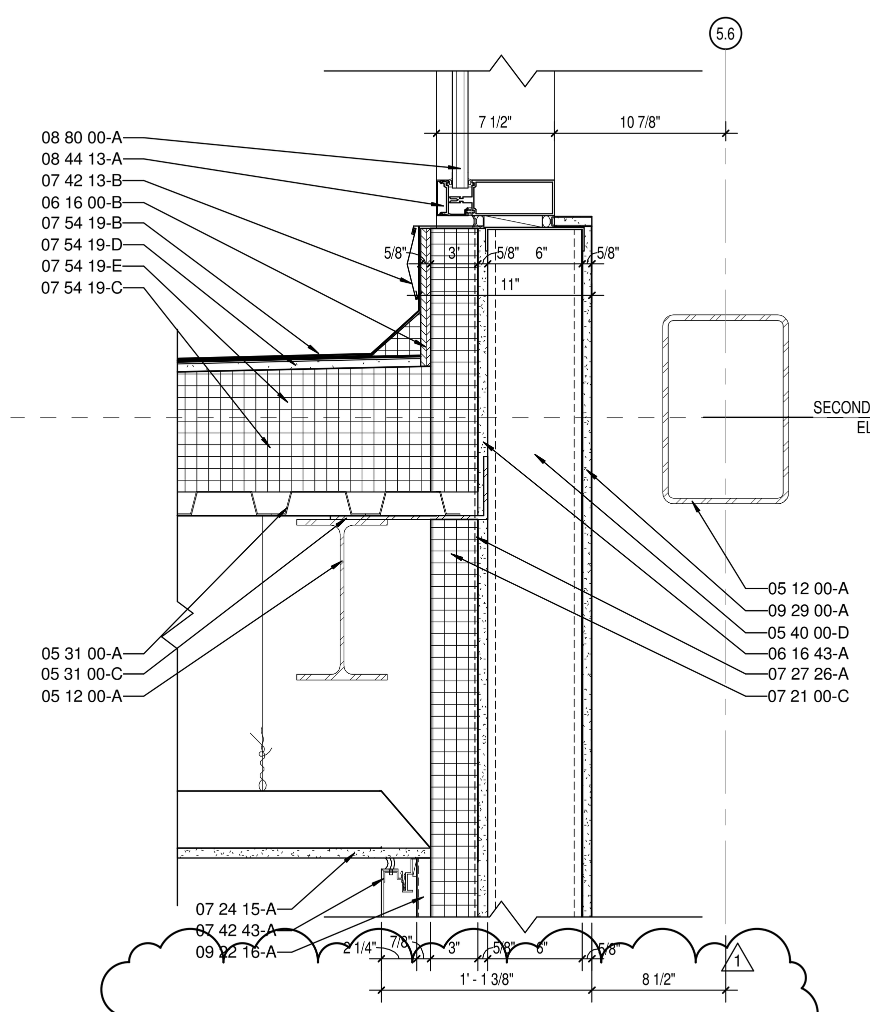

4 A413 ENLARGED SECTION DETAIL
SCALE: 1 1/2" = 1'-0"

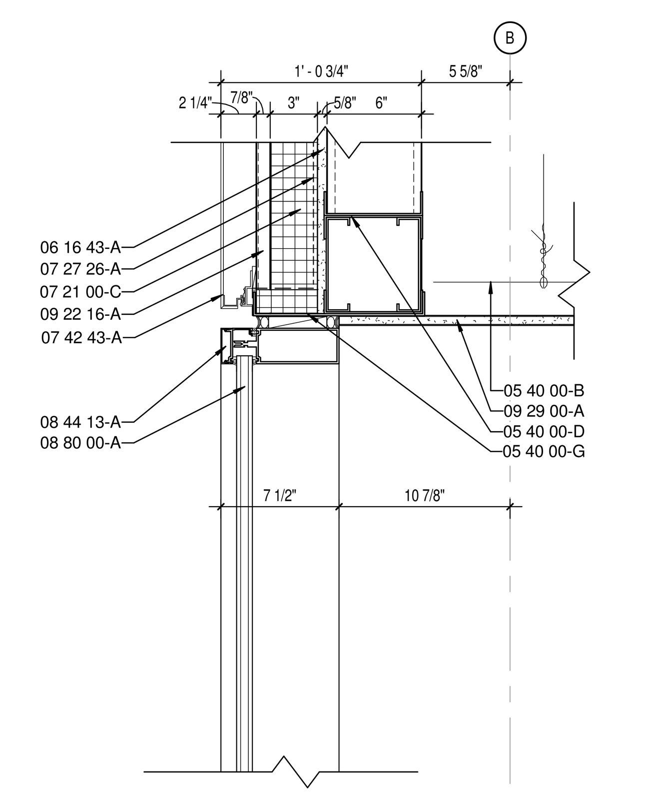

2 A413 ENLARGED SECTION DETAIL
SCALE: 1 1/2" = 1'-0"

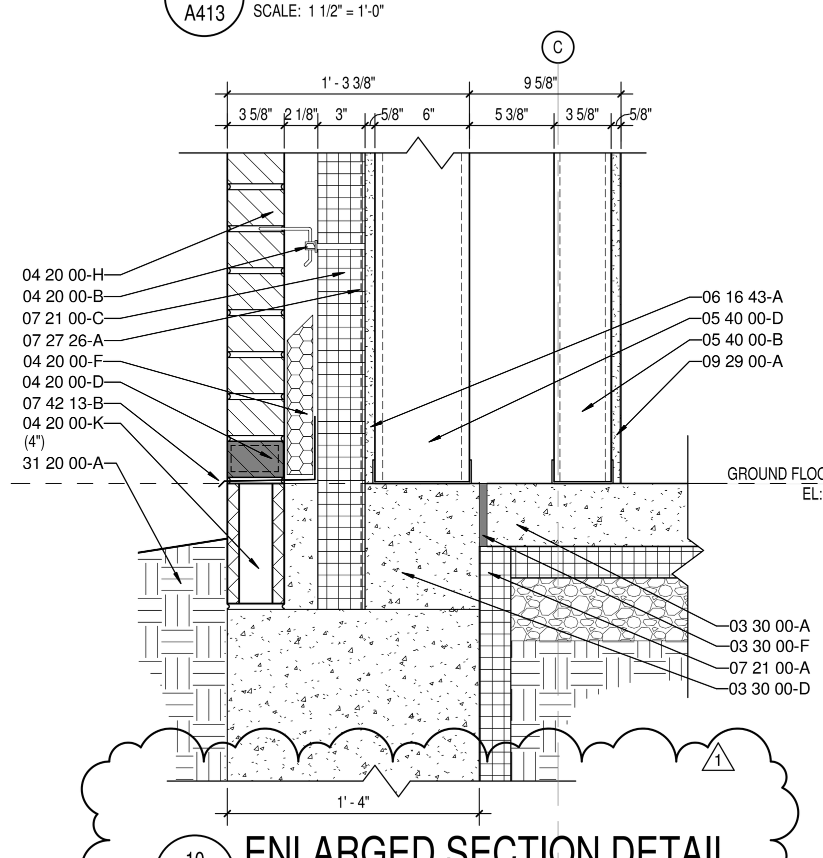

10 A413 ENLARGED SECTION DETAIL
SCALE: 1 1/2" = 1'-0"

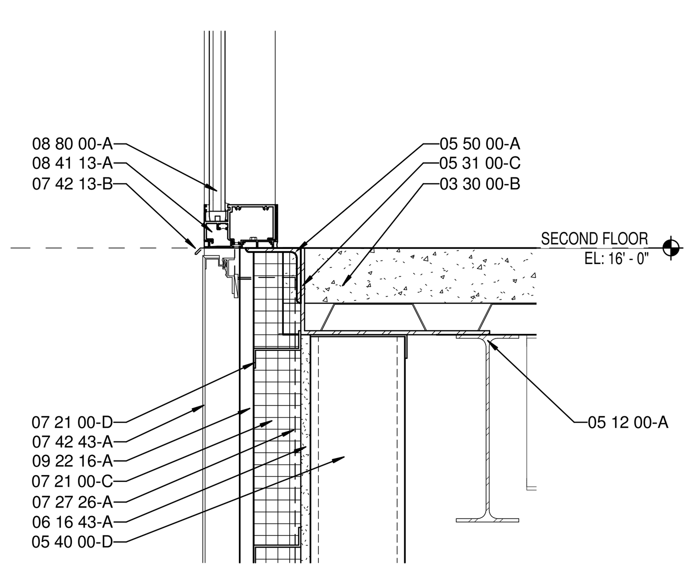

7 A413 ENLARGED SECTION DETAIL
SCALE: 1 1/2" = 1'-0"

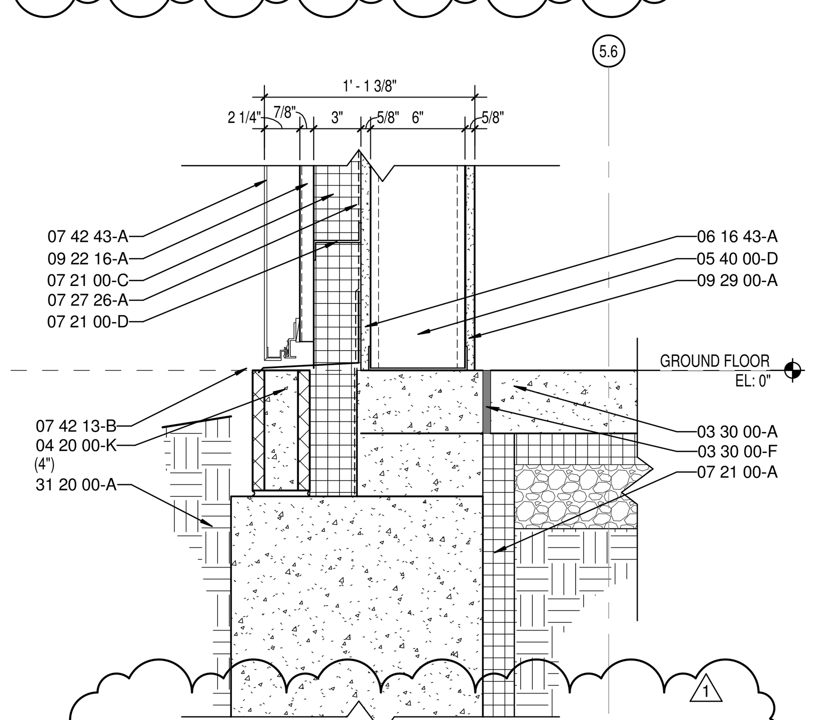

3 A413 ENLARGED SECTION DETAIL
SCALE: 1 1/2" = 1'-0"

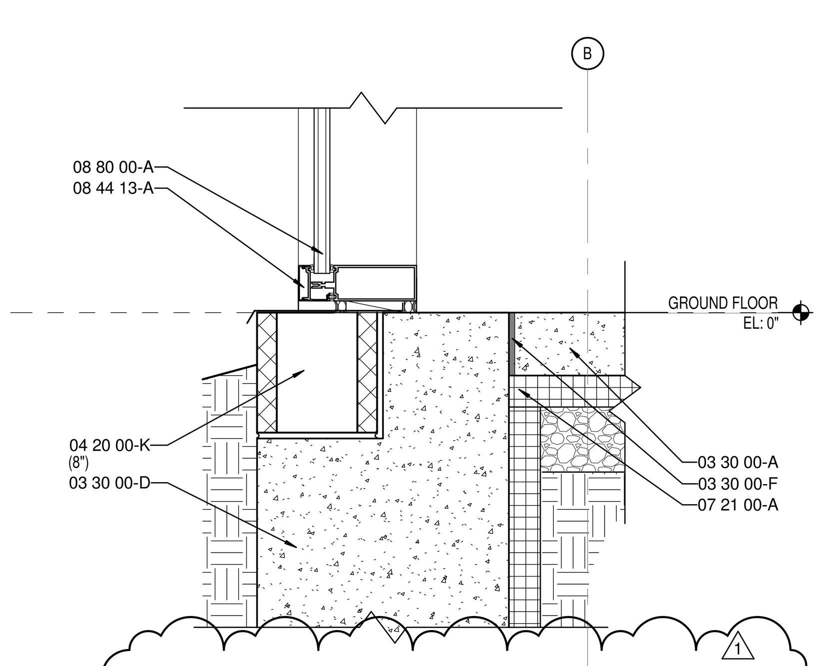

1 A413 ENLARGED SECTION DETAIL
SCALE: 1 1/2" = 1'-0"

KEYNOTE LEGEND

03 30 00-A	CONCRETE SLAB OVER VAPOR BARRIER ON DRAINAGE FILL. SEE STRUCTURAL
03 30 00-B	CONCRETE SLAB ON METAL DECK- SEE STRUCTURAL
03 30 00-D	CONCRETE FOOTING- SEE STRUCTURAL
03 30 00-F	1/2" EXPANSION MATERIAL
04 20 00-A	GROUT SOLID
04 20 00-B	ADJUSTIBLE MASONRY VENEER ANCHOR AT 16" O.C. VERTICALLY
04 20 00-D	WEEP HOLES AT 16" O.C.
04 20 00-F	CAVITY DRAINAGE MATERIAL
04 20 00-G	BRICK TYPE 1
04 20 00-H	BRICK TYPE 2 (ACCENT)
04 20 00-I	CONCRETE MASONRY UNIT
04 20 00-J	BOND BEAM MASONRY UNIT
04 20 00-K	GROUND FACE CONCRETE MASONRY UNIT
05 12 00-A	STRUCTURAL STEEL FRAMING MEMBER- SEE STRUCTURAL
05 21 00-A	STEEL JOIST- SEE STRUCTURAL
05 21 00-B	STEEL JOIST GIRDER- SEE STRUCTURAL
05 31 00-A	METAL ROOF DECKING- SEE STRUCTURAL
05 31 00-B	METAL FLOOR DECKING- SEE STRUCTURAL
05 31 00-C	METAL DECK CLOSURE
05 40 00-B	3 5/8" 16 GA. MIN GALVANIZED STEEL STUD
05 40 00-D	6" 16 GA. MIN GALVANIZED STEEL STUD
05 40 00-G	12" 14 GA. MIN GALVANIZED STEEL STUD TRACK
05 50 00-A	MISCELLANEOUS STEEL - SEE STRUCTURAL
05 50 00-C	PAINTED STEEL BRICK LINTEL
05 50 00-D	STEEL SHELF ANGLE- SEE STRUCTURAL
05 51 00-A	CONCRETE FILLED METAL PAN TREAD AND RISER
05 51 00-B	STAIR METAL STRINGER- TUBE
05 51 00-C	STEEL TUBE LANDING SUPPORT
05 51 00-D	CONCRETE FILLED METAL PAN STAIR LANDING (SEALED)
05 51 00-E	PRECAST POLISHED CONCRETE TREAD (FINISH TO MATCH PC1 SEE A800 SERIES)
05 51 00-F	PRECAST POLISHED CONCRETE STAIR LANDING (FINISH TO MATCH PC1 SEE A800 SERIES)
05 52 13-A	1-1/4" I.D. STAINLESS STEEL PIPE RAILING
05 73 00-A	1-1/4" I.D. STAINLESS STEEL HANDRAIL
05 73 00-B	STAINLESS STEEL HANDRAIL BRACKET
05 73 00-C	STAINLESS STEEL CAP RAIL
05 73 00-D	CORE DRILL AND SET RAILING POST W/NON-SHRINK, NON-METALLIC GROUT
05 73 00-E	1/2" O.D. PAINTED STEEL BALUSTER
05 73 00-F	3/4" X 2" PAINTED STEEL POST
05 73 00-G	2" X 3" POST COVER FLANGE
06 10 53-A	1X WOOD BLOCKING
06 10 53-B	2X WOOD BLOCKING
06 16 00-A	3/4" EXTERIOR GRADE PLYWOOD
06 16 00-B	5/8" EXTERIOR GRADE PLYWOOD
06 16 43-A	5/8" EXTERIOR GYPSUM SHEATHING
06 40 00-A	SOLID PLASTIC SURFACE - 1/2" WINDOW STOOL
07 21 00-A	SLAB PERIMETER RIGID INSULATION (R-15 FOR 24" HORZ. & VERT.)
07 21 00-B	PACK FULL WITH MINERAL WOOL BATT INSULATION
07 21 00-C	3" CAVITY WALL EXTRUDED POLYSTYRENE INSULATION (R-16.8)
07 21 00-D	THERMALLY BROKEN Z-CLIPS @ 16" 0.C. VERTICALLY
07 21 00-E	SPRAY APPLIED THERMAL INSULATION (R-20)
07 21 00-F	MINERAL WOOL BATT INSULATION
07 24 15-A	DIRECT APPLIED FINISH SYSTEM (DAFS)- UN-INSULATED SOFFIT
07 25 00-A	WEATHER RESISTIVE BARRIERS- BUILDING WRAP
07 27 26-A	FLUID APPLIED MEMBRANE AIR BARRIER
07 42 13-A	PRE-FINISHED METAL WALL PANEL
07 42 13-B	FLASHING
07 42 13-C	TRIM
07 42 43-A	COMPOSITE METAL WALL PANEL
07 42 43-B	HAT CHANNEL - SEE SECTIONS FOR DEPTH
07 42 43-D	COMPOSITE METAL SOFFIT
07 54 19-A	POLYVINYL-CHLORIDE MEMBRANE (PVC) ROOFING SYSTEM
07 54 19-B	MEMBRANE ROOFING - EXTEND OVER AND ATTACH TO FRONT FACE OF PARAPET
07 54 19-C	2 LAYERS OF 2" POLYISO INSULATION BOARD (R-26)
07 54 19-D	1/2" COVER BOARD
07 54 19-E	TAPERED POLYISO INSULATION BOARD
07 71 00-A	MANUFACTURED COPING
07 71 00-B	MANUFACTURED GRAVEL STOP
07 92 00-A	BACKER ROD AND SEALANT
07 92 00-B	SEALANT EACH SIDE, TYPICAL
07 92 00-C	SEALANT
07 92 00-D	BACKER ROD AND SEALANT EACH SIDE, TYPICAL
08 11 13-A	HOLLOW METAL DOOR
08 11 13-B	HOLLOW METAL DOOR/BORROWED LIGHT FRAME
08 14 16-A	FLUSH WOOD DOOR
08 33 23-A	OVERHEAD COILING DOOR
08 41 13-A	4 1/2" ALUMINUM-FRAMED STOREFRONT
08 41 13-B	ALUMINUM ENTRANCE DOOR
08 41 13-C	ALUMINUM BRAKE METAL TO MATCH STOREFRONT FRAME
08 44 13-A	7 1/2" DEEP ALUMINUM CURTAINWALL SYSTEM
08 44 13-B	CURTAINWALL ATTACHMENT MEMBER, ALLOW FOR THERMAL MOVEMENT
08 80 00-A	GLAZING - SEE SCHEDULE/ELEVATIONS
09 22 16-A	7/8" FURRING CHANNEL
09 22 16-B	3 5/8" STEEL STUD
09 22 16-C	6" STEEL STUD
09 22 16-E	METAL STUD KICKERS AS REQUIRED
09 22 16-F	10" STEEL STUD
09 29 00-A	5/8" GYPSUM WALL BOARD (SEE SPECS FOR TYPE)
09 29 00-C	SUSPENDED GYPSUM BOARD CEILING ASSEMBLY
09 29 00-D	METAL J- MOULD
09 51 13-A	ACOUSTICAL CEILING SUSPENSION ASSEMBLY
31 20 00-A	FINISH GRADE- SEE CIVIL SHEETS
32 13 13-A	SIDEWALK- SEE CIVIL SHEETS

MADE @ PLAINFIELD

CSO
8831 Keystone Crossing, Indianapolis, IN 46240
317.848.7800 | csoinc.net
© 2018 CSO Architects, Inc. All Rights Reserved

PROJECT:
TOWN OF PLAINFIELD
MADE@ PLAINFIELD
Red Pride Drive, Plainfield, IN 46168

SCOPE DRAWINGS:
These drawings indicate the general scope of the project in terms of architectural design concept, the dimensions of the building, the major architectural elements and the type of structural, mechanical and electrical systems.
The drawings do not necessarily indicate or describe all work required for full performance and completion of the requirements of the Contract.
On the basis of the general scope indicated or described, the trade contractors shall furnish all items required for the proper execution and completion of the work.

REVISIONS:

1	BP #1 ADD. #1	01-30-20

ISSUE DATE	DRAWN BY	CHECKED BY
01/30/20	BSN	JRF

DRAWING TITLE:
ENLARGED SECTION DETAILS

CERTIFIED BY:
BID PACK 1 NOT FOR CONSTRUCTION

DRAWING NUMBER
A413

PROJECT NUMBER
19004

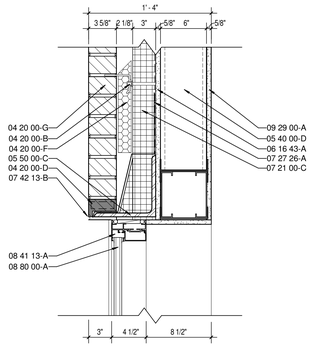

4 A414 ENLARGED SECTION DETAIL
SCALE: 1 1/2" = 1'-0"

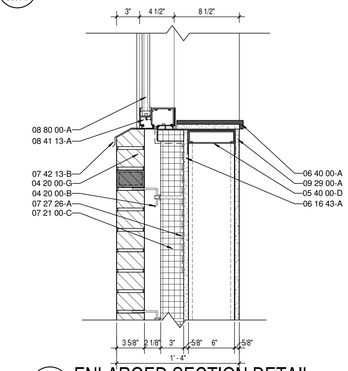

3 A414 ENLARGED SECTION DETAIL
SCALE: 1 1/2" = 1'-0"

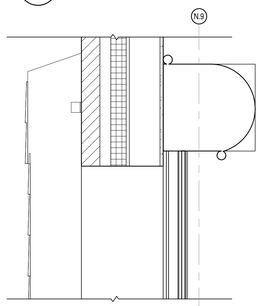

2 A414 ENLARGED SECTION DETAIL
SCALE: 1" = 1'-0"

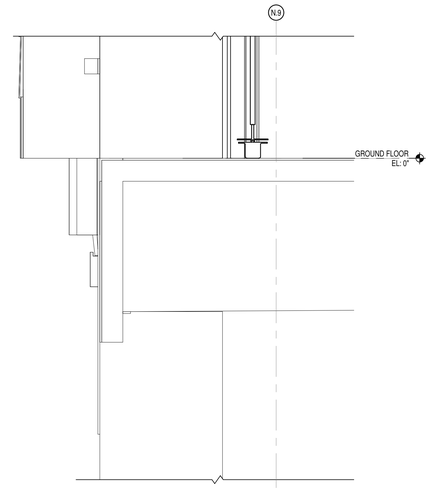

1 A414 ENLARGED SECTION DETAIL
SCALE: 1 1/2" = 1'-0"

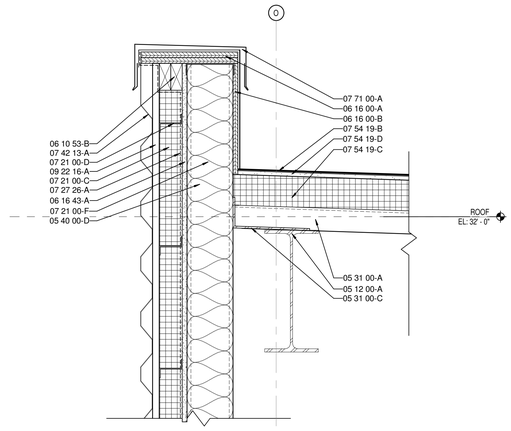

13 A414 ENLARGED SECTION DETAIL
SCALE: 1 1/2" = 1'-0"

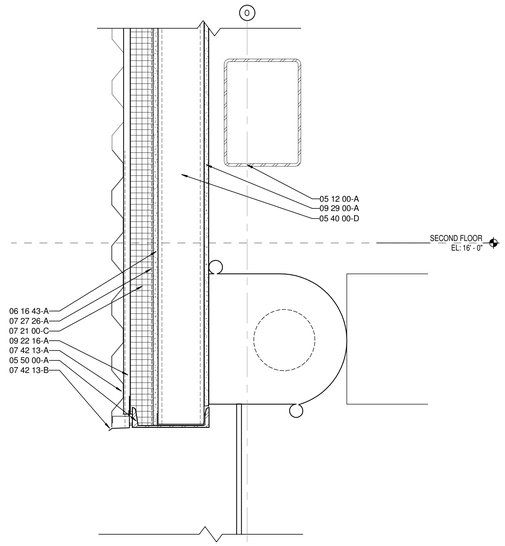

12 A414 ENLARGED SECTION DETAIL
SCALE: 1 1/2" = 1'-0"

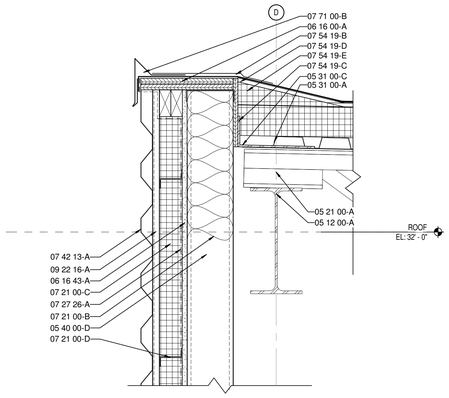

10 A414 ENLARGED SECTION DETAIL
SCALE: 1 1/2" = 1'-0"

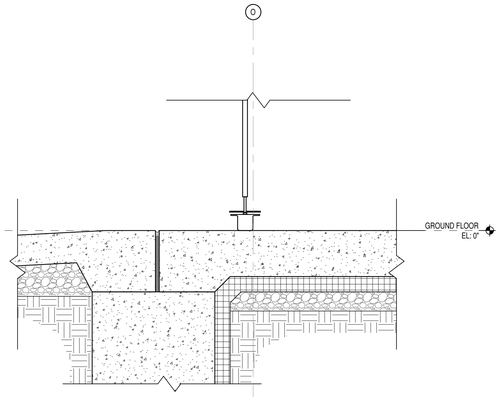

11 A414 ENLARGED SECTION DETAIL
SCALE: 1 1/2" = 1'-0"

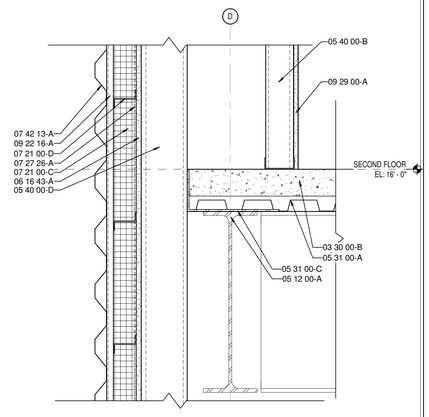

9 A414 ENLARGED SECTION DETAIL
SCALE: 1 1/2" = 1'-0"

KEYNOTE LEGEND

03 30 00-A	CONCRETE SLAB OVER VAPOR BARRIER ON DRAINAGE FILL. SEE STRUCTURAL
03 30 00-B	CONCRETE SLAB ON METAL DECK- SEE STRUCTURAL
03 30 00-D	CONCRETE FOOTING- SEE STRUCTURAL
03 30 00-F	1/2" EXPANSION MATERIAL
04 20 00-A	GROUT SOLID
04 20 00-B	ADJUSTIBLE MASONRY VENEER ANCHOR AT 16" O.C. VERTICALLY
04 20 00-D	WEEP HOLES AT 16" O.C.
04 20 00-F	CAVITY DRAINAGE MATERIAL
04 20 00-G	BRICK TYPE 1
04 20 00-H	BRICK TYPE 2 (ACCENT)
04 20 00-I	CONCRETE MASONRY UNIT
04 20 00-J	BOND BEAM MASONRY UNIT
04 20 00-K	GROUND FACE CONCRETE MASONRY UNIT
05 12 00-A	STRUCTURAL STEEL FRAMING MEMBER- SEE STRUCTURAL
05 21 00-A	STEEL JOIST- SEE STRUCTURAL
05 21 00-B	STEEL JOIST GIRDER- SEE STRUCTURAL
05 31 00-A	METAL ROOF DECKING- SEE STRUCTURAL
05 31 00-B	METAL FLOOR DECKING- SEE STRUCTURAL
05 31 00-C	METAL DECK CLOSURE
05 40 00-B	3 5/8" 16 GA. MIN GALVANIZED STEEL STUD
05 40 00-D	6" 16 GA. MIN GALVANIZED STEEL STUD
05 40 00-G	12" 14 GA. MIN GALVANIZED STEEL STUD TRACK
05 50 00-A	MISCELLANEOUS STEEL - SEE STRUCTURAL
05 50 00-C	PAINTED STEEL BRICK LINTEL
05 50 00-D	STEEL SHELF ANGLE- SEE STRUCTURAL
05 51 00-A	CONCRETE FILLED METAL PAN TREAD AND RISER
05 51 00-B	STAIR METAL STRINGER- TUBE
05 51 00-C	STEEL TUBE LANDING SUPPORT
05 51 00-D	CONCRETE FILLED METAL PAN STAIR LANDING (SEALED)
05 51 00-E	PRECAST POLISHED CONCRETE TREAD (FINISH TO MATCH PC1 SEE A800 SERIES)
05 51 00-F	PRECAST POLISHED CONCRETE STAIR LANDING (FINISH TO MATCH PC1 SEE A800 SERIES)
05 52 13-A	1-1/4" I.D. STAINLESS STEEL PIPE RAILING
05 73 00-A	1-1/4" I.D. STAINLESS STEEL HANDRAIL
05 73 00-B	STAINLESS STEEL HANDRAIL BRACKET
05 73 00-C	STAINLESS STEEL CAP RAIL
05 73 00-D	CORE DRILL AND SET RAILING POST W/NON-SHRINK, NON-METALLIC GROUT
05 73 00-E	1/2" O.D. PAINTED STEEL BALUSTER
05 73 00-F	3/4" X 2" PAINTED STEEL POST
05 73 00-G	2" X 3" POST COVER FLANGE
06 10 53-A	1X WOOD BLOCKING
06 10 53-B	2X WOOD BLOCKING
06 16 00-A	3/4" EXTERIOR GRADE PLYWOOD
06 16 00-B	5/8" EXTERIOR GRADE PLYWOOD
06 16 43-A	5/8" EXTERIOR GYPSUM SHEATHING
06 40 00-A	SOLID PLASTIC SURFACE - 1/2" WINDOW STOOL
07 21 00-A	SLAB PERIMETER RIGID INSULATION (R-15 FOR 24" HORZ. & VERT.)
07 21 00-B	PACK FULL WITH MINERAL WOOL BATT INSULATION
07 21 00-C	3" CAVITY WALL EXTRUDED POLYSTYRENE INSULATION (R-16.8)
07 21 00-D	THERMALLY BROKEN Z-CLIPS @ 16" O.C. VERTICALLY
07 21 00-E	SPRAY APPLIED THERMAL INSULATION (R-20)
07 21 00-F	MINERAL WOOL BATT INSULATION
07 24 15-A	DIRECT APPLIED FINISH SYSTEM (DAFS)- UN-INSULATED SOFFIT
07 25 00-A	WEATHER RESISTIVE BARRIERS- BUILDING WRAP
07 27 26-A	FLUID APPLIED MEMBRANE AIR BARRIER
07 42 13-A	PRE-FINISHED METAL WALL PANEL
07 42 13-B	FLASHING
07 42 13-C	TRIM
07 42 43-A	COMPOSITE METAL WALL PANEL
07 42 43-B	HAT CHANNEL - SEE SECTIONS FOR DEPTH
07 42 43-D	COMPOSITE METAL SOFFIT
07 54 19-A	POLYVINYL-CHLORIDE MEMBRANE (PVC) ROOFING SYSTEM
07 54 19-B	MEMBRANE ROOFING - EXTEND OVER AND ATTACH TO FRONT FACE OF PARAPET
07 54 19-C	2 LAYERS OF 2" POLYISO INSULATION BOARD (R-26)
07 54 19-D	1/2" COVER BOARD
07 54 19-E	TAPERED POLYISO INSULATION BOARD
07 71 00-A	MANUFACTURED COPING
07 71 00-B	MANUFACTURED GRAVEL STOP
07 92 00-A	BACKER ROD AND SEALANT
07 92 00-B	SEALANT EACH SIDE, TYPICAL
07 92 00-C	SEALANT
07 92 00-D	BACKER ROD AND SEALANT EACH SIDE, TYPICAL
08 11 13-A	HOLLOW METAL DOOR
08 11 13-B	HOLLOW METAL DOOR/BORROWED LIGHT FRAME
08 14 16-A	FLUSH WOOD DOOR
08 33 23-A	OVERHEAD COILING DOOR
08 41 13-A	4 1/2" ALUMINUM FRAMED STOREFRONT
08 41 13-B	ALUMINUM ENTRANCE DOOR
08 41 13-C	ALUMINUM BRAKE METAL TO MATCH STOREFRONT FRAME
08 44 13-A	7 1/2" DEEP ALUMINUM CURTAINWALL SYSTEM
08 44 13-B	CURTAINWALL ATTACHMENT MEMBER, ALLOW FOR THERMAL MOVEMENT
08 80 00-A	GLAZING - SEE SCHEDULE/ELEVATIONS
09 22 16-A	7/8" FURRING CHANNEL
09 22 16-B	3 5/8" STEEL STUD
09 22 16-C	6" STEEL STUD
09 22 16-E	METAL STUD KICKERS AS REQUIRED
09 22 16-F	10" STEEL STUD
09 29 00-A	5/8" GYPSUM WALL BOARD (SEE SPECS FOR TYPE)
09 29 00-C	SUSPENDED GYPSUM BOARD CEILING ASSEMBLY
09 29 00-D	METAL J- MOULD
09 51 13-A	ACOUSTICAL CEILING SUSPENSION ASSEMBLY
31 20 00-A	FINISH GRADE- SEE CIVIL SHEETS
32 13 13-A	SIDEWALK- SEE CIVIL SHEETS

MADE @ PLAINFIELD

CSO
8831 Keystone Crossing, Indianapolis, IN 46240
317.848.7600 | csoinc.net
© 2019 CSO Architects, Inc. All Rights Reserved

PROJECT:
TOWN OF PLAINFIELD
MADE@ PLAINFIELD
Red Pride Drive, Plainfield, IN 46168

SCOPE DRAWINGS:
These drawings indicate the general scope of the project in terms of architectural design concept, the dimensions of the building, the major architectural elements and the type of structural, mechanical and electrical systems. The Contract Documents are intended to describe all work required for full performance and completion of the requirements of the Contract.
In lieu of the architectural scope indicated or described, the trade contractors shall furnish all items required for the proper execution and completion of the work.

REVISIONS:
1 BP #1 ADD. #1 01-30-20

ISSUE DATE	DRAWN BY	CHECKED BY
01/30/20	BSN	JRF

DRAWING TITLE:
ENLARGED SECTION DETAILS

CERTIFIED BY:
BID PACK 1
NOT FOR CONSTRUCTION

DRAWING NUMBER
A414

PROJECT NUMBER
19004

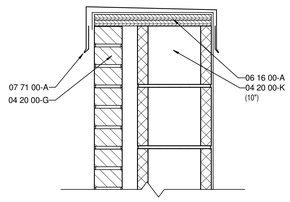

3 A415 ENLARGED SECTION DETAIL
SCALE: 1 1/2" = 1'-0"

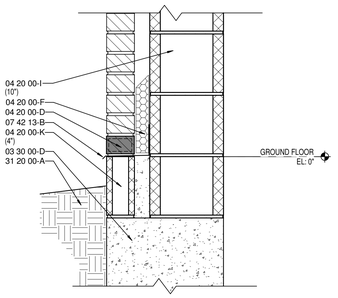

2 A415 ENLARGED SECTION DETAIL
SCALE: 1 1/2" = 1'-0"

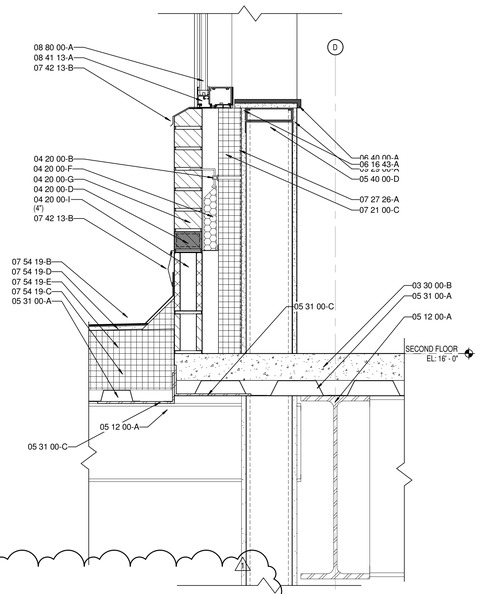

1 A415 ENLARGED SECTION DETAIL
SCALE: 1 1/2" = 1'-0"

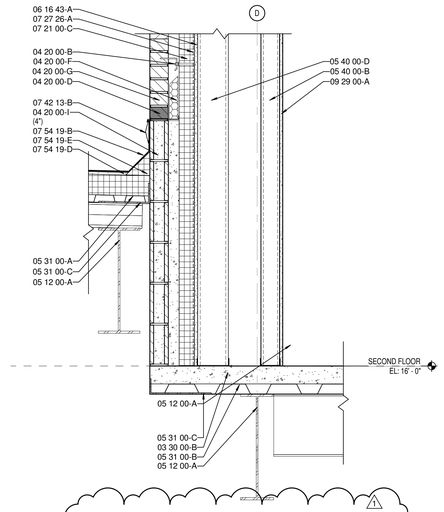

11 A415 ENLARGED SECTION DETAIL
SCALE: 1" = 1'-0"

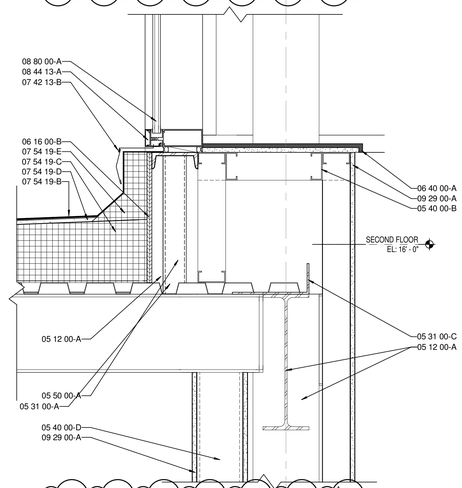

10 A415 ENLARGED SECTION DETAIL
SCALE: 1 1/2" = 1'-0"

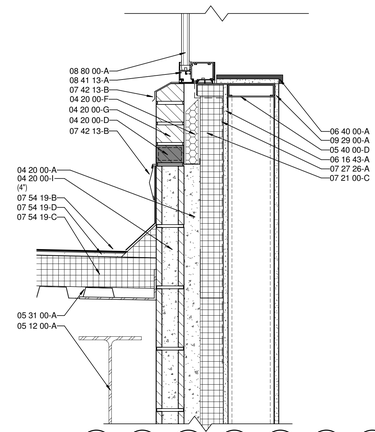

5 A415 ENLARGED SECTION DETAIL
SCALE: 1 1/2" = 1'-0"

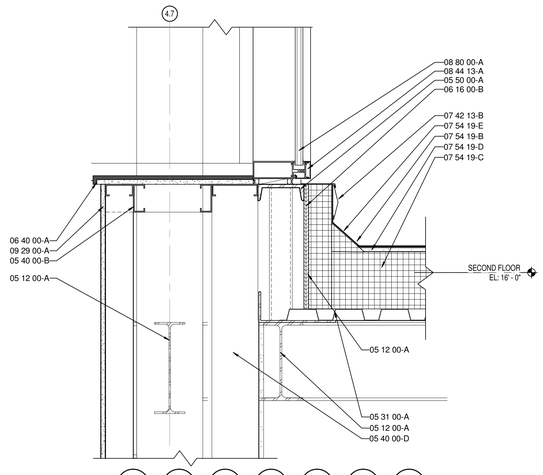

8 A415 ENLARGED SECTION DETAIL
SCALE: 1 1/2" = 1'-0"

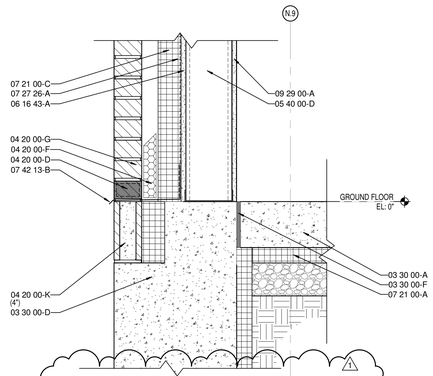

4 A415 ENLARGED SECTION DETAIL
SCALE: 1 1/2" = 1'-0"

KEYNOTE LEGEND

03 30 00-A	CONCRETE SLAB OVER VAPOR BARRIER ON DRAINAGE FILL. SEE STRUCTURAL
03 30 00-B	CONCRETE SLAB ON METAL DECK- SEE STRUCTURAL
03 30 00-D	CONCRETE FOOTING- SEE STRUCTURAL
03 30 00-F	1/2" EXPANSION MATERIAL
04 20 00-A	GROUT SOLID
04 20 00-B	ADJUSTIBLE MASONRY VENEER ANCHOR AT 16" O.C. VERTICALLY
04 20 00-D	WEEP HOLES AT 16" O.C.
04 20 00-F	CAVITY DRAINAGE MATERIAL
04 20 00-G	BRICK TYPE 1
04 20 00-H	BRICK TYPE 2 (ACCENT)
04 20 00-I	CONCRETE MASONRY UNIT
04 20 00-J	BOND BEAM MASONRY UNIT
04 20 00-K	GROUND FACE CONCRETE MASONRY UNIT
05 12 00-A	STRUCTURAL STEEL FRAMING MEMBER- SEE STRUCTURAL
05 21 00-A	STEEL JOIST- SEE STRUCTURAL
05 21 00-B	STEEL JOIST GIRDER- SEE STRUCTURAL
05 31 00-A	METAL ROOF DECKING- SEE STRUCTURAL
05 31 00-B	METAL FLOOR DECKING- SEE STRUCTURAL
05 31 00-C	METAL DECK CLOSURE
05 40 00-B	3 5/8" 16 GA. MIN GALVANIZED STEEL STUD
05 40 00-D	6" 16 GA. MIN GALVANIZED STEEL STUD
05 40 00-G	12" 14 GA. MIN GALVANIZED STEEL STUD TRACK
05 50 00-A	MISCELLANEOUS STEEL - SEE STRUCTURAL
05 50 00-C	PAINTED STEEL BRICK LINTEL
05 50 00-D	STEEL SHELF ANGLE- SEE STRUCTURAL
05 51 00-A	CONCRETE FILLED METAL PAN TREAD AND RISER
05 51 00-B	STAIR METAL STRINGER- TUBE
05 51 00-C	STEEL TUBE LANDING SUPPORT
05 51 00-D	CONCRETE FILLED METAL PAN STAIR LANDING (SEALED)
05 51 00-E	PRECAST POLISHED CONCRETE TREAD (FINISH TO MATCH PC1 SEE A800 SERIES)
05 51 00-F	PRECAST POLISHED CONCRETE STAIR LANDING (FINISH TO MATCH PC1 SEE A800 SERIES)
05 52 13-A	1-1/4" I.D. STAINLESS STEEL PIPE RAILING
05 73 00-A	1-1/4" I.D. STAINLESS STEEL HANDRAIL
05 73 00-B	STAINLESS STEEL HANDRAIL BRACKET
05 73 00-C	STAINLESS STEEL CAP RAIL
05 73 00-D	CORE DRILL AND SET RAILING POST W/NON-SHRINK, NON-METALLIC GROUT
05 73 00-E	1/2" O.D. PAINTED STEEL BALUSTER
05 73 00-F	3/4" X 2" PAINTED STEEL POST
05 73 00-G	2" X 3" POST COVER FLANGE
06 10 53-A	1X WOOD BLOCKING
06 10 53-B	2X WOOD BLOCKING
06 16 00-A	3/4" EXTERIOR GRADE PLYWOOD
06 16 00-B	5/8" EXTERIOR GRADE PLYWOOD
06 16 43-A	5/8" EXTERIOR GYPSUM SHEATHING
06 40 00-A	SOLID PLASTIC SURFACE - 1/2" WINDOW STOOL
07 21 00-A	SLAB PERIMETER RIGID INSULATION (R-15 FOR 24" HORZ. & VERT.)
07 21 00-B	PACK FULL WITH MINERAL WOOL BATT INSULATION
07 21 00-C	3" CAVITY WALL EXTRUDED POLYSTYRENE INSULATION (R-16.8)
07 21 00-D	THERMALLY BROKEN Z-CLIPS @ 16" O.C. VERTICALLY
07 21 00-E	SPRAY APPLIED THERMAL INSULATION (R-20)
07 21 00-F	MINERAL WOOL BATT INSULATION
07 24 15-A	DIRECT APPLIED FINISH SYSTEM (DAFS)- UN-INSULATED SOFFIT
07 25 00-A	WEATHER RESISTIVE BARRIERS- BUILDING WRAP
07 27 26-A	FLUID APPLIED MEMBRANE AIR BARRIER
07 42 13-A	PRE-FINISHED METAL WALL PANEL
07 42 13-B	FLASHING
07 42 13-C	TRIM
07 42 43-A	COMPOSITE METAL WALL PANEL
07 42 43-B	HAT CHANNEL - SEE SECTIONS FOR DEPTH
07 42 43-D	COMPOSITE METAL SOFFIT
07 54 19-A	POLYVINYL-CHLORIDE MEMBRANE (PVC) ROOFING SYSTEM
07 54 19-B	MEMBRANE ROOFING - EXTEND OVER AND ATTACH TO FRONT FACE OF PARAPET
07 54 19-C	2 LAYERS OF 2" POLYISO INSULATION BOARD (R-26)
07 54 19-D	1/2" COVER BOARD
07 54 19-E	TAPERED POLYISO INSULATION BOARD
07 71 00-A	MANUFACTURED COPING
07 71 00-B	MANUFACTURED GRAVEL STOP
07 92 00-A	BACKER ROD AND SEALANT
07 92 00-B	SEALANT EACH SIDE, TYPICAL
07 92 00-C	SEALANT
07 92 00-D	BACKER ROD AND SEALANT EACH SIDE, TYPICAL
08 11 13-A	HOLLOW METAL DOOR
08 11 13-B	HOLLOW METAL DOOR/BORROWED LIGHT FRAME
08 14 16-A	FLUSH WOOD DOOR
08 33 23-A	OVERHEAD COILING DOOR
08 41 13-A	4 1/2" ALUMINUM FRAMED STOREFRONT
08 41 13-B	ALUMINUM ENTRANCE DOOR
08 41 13-C	ALUMINUM BRAKE METAL TO MATCH STOREFRONT FRAME
08 44 13-A	7 1/2" DEEP ALUMINUM CURTAINWALL SYSTEM
08 44 13-B	CURTAINWALL ATTACHMENT MEMBER, ALLOW FOR THERMAL MOVEMENT
08 80 00-A	GLAZING - SEE SCHEDULE/ELEVATIONS
09 22 16-A	7/8" FURRING CHANNEL
09 22 16-B	3 5/8" STEEL STUD
09 22 16-C	6" STEEL STUD
09 22 16-E	METAL STUD KICKERS AS REQUIRED
09 22 16-F	10" STEEL STUD
09 29 00-A	5/8" GYPSUM WALL BOARD (SEE SPECS FOR TYPE)
09 29 00-C	SUSPENDED GYPSUM BOARD CEILING ASSEMBLY
09 29 00-D	METAL J- MOULD
09 51 13-A	ACOUSTICAL CEILING SUSPENSION ASSEMBLY
31 20 00-A	FINISH GRADE- SEE CIVIL SHEETS
32 13 13-A	SIDEWALK- SEE CIVIL SHEETS

MADE @ PLAINFIELD

CSO
8831 Keystone Crossing, Indianapolis, IN 46240
317.848.7600 | csoinc.net
© 2019 CSO Architects, Inc. All Rights Reserved

PROJECT:
TOWN OF PLAINFIELD
MADE@ PLAINFIELD
Red Pride Drive, Plainfield, IN 46168

SCOPE DRAWINGS:
These drawings indicate the general scope of the project in terms of architectural design concept, the dimensions of the building, the major architectural elements and the type of structural, mechanical and electrical systems. The contract documents are intended to describe all work required for full performance and completion of the requirements of the Contract.
In lieu of the architectural scope indicated or described, the trade contractors shall furnish all items required for the proper execution and completion of the work.

REVISIONS:
1 BP #1 ADD. #1 01-30-20

ISSUE DATE	DRAWN BY	CHECKED BY
01/30/20	BSN	JRF

DRAWING TITLE:
ENLARGED SECTION DETAILS

CERTIFIED BY:
BID PACK 1
NOT FOR CONSTRUCTION

DRAWING NUMBER
A415

PROJECT NUMBER
19004

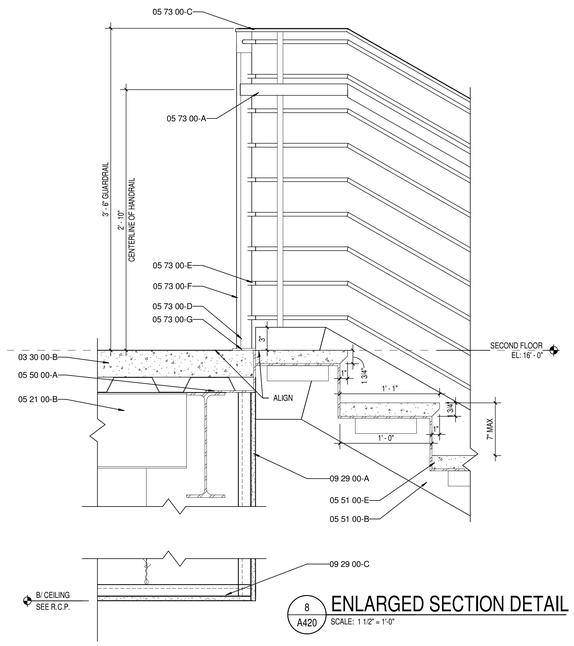

8 A420 ENLARGED SECTION DETAIL
SCALE: 1 1/2" = 1'-0"

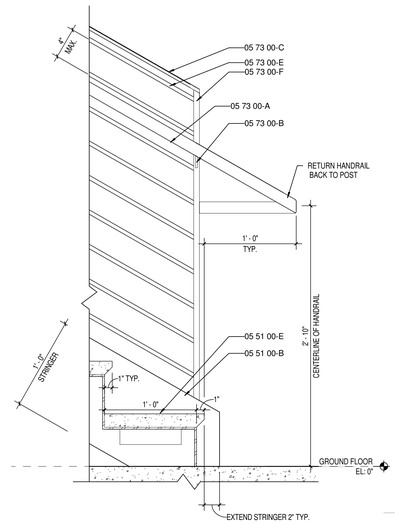

7 A420 ENLARGED SECTION DETAIL
SCALE: 1 1/2" = 1'-0"

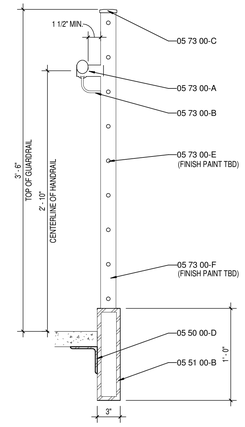

4 A420 ENLARGED RAILING DETAIL
SCALE: 1 1/2" = 1'-0"

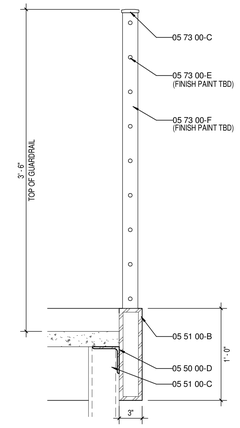

3 A420 ENLARGED RAILING DETAIL
SCALE: 1 1/2" = 1'-0"

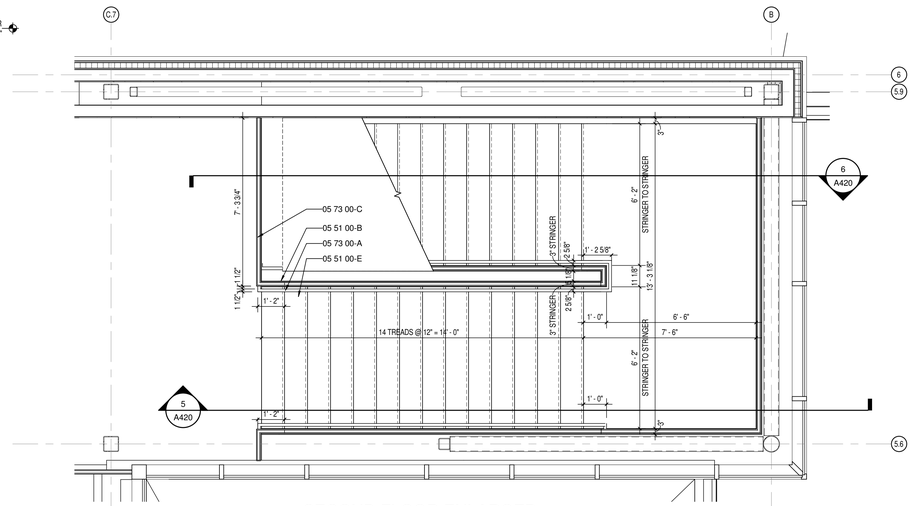

2 A420 SECOND FLOOR ENLARGED STAIR PLAN
SCALE: 3/8" = 1'-0"

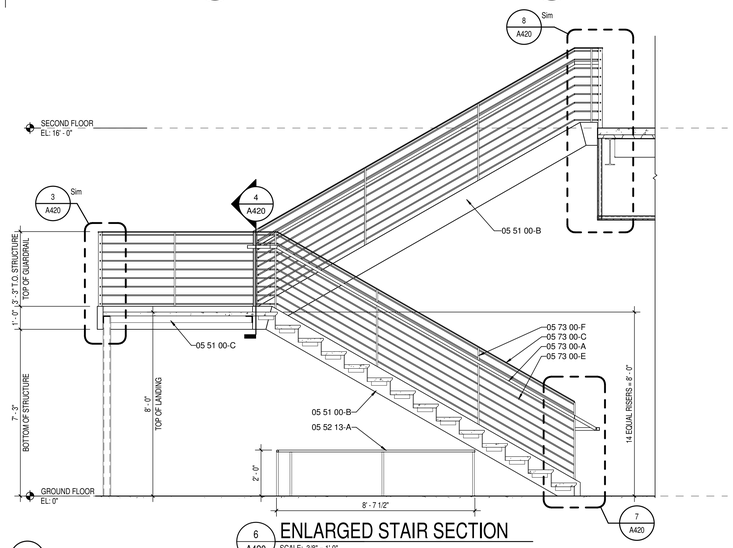

6 A420 ENLARGED STAIR SECTION
SCALE: 3/8" = 1'-0"

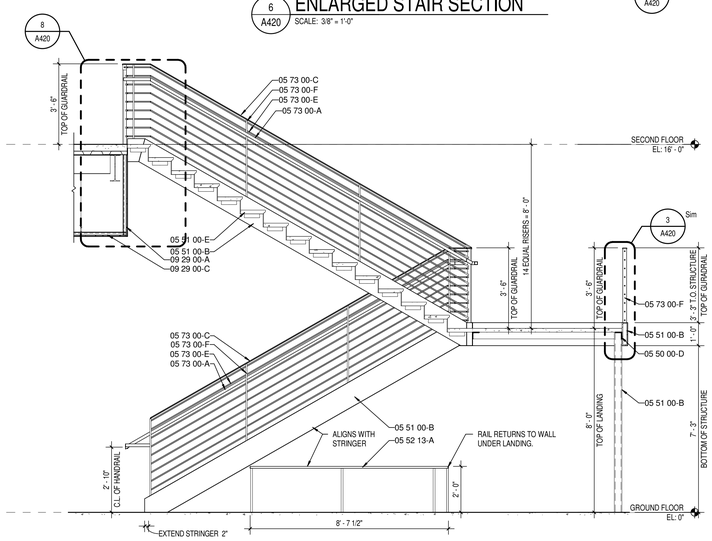

5 A420 ENLARGED STAIR SECTION
SCALE: 3/8" = 1'-0"

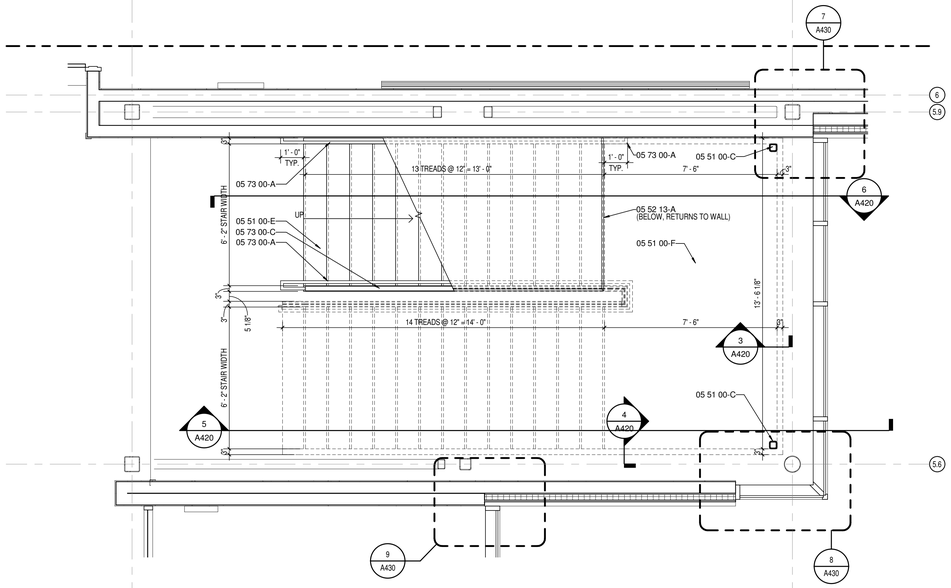

1 A420 GROUND FLOOR ENLARGED STAIR PLAN
SCALE: 3/8" = 1'-0"

KEYNOTE LEGEND

03 30 00-A	CONCRETE SLAB OVER VAPOR BARRIER ON DRAINAGE FILL. SEE STRUCTURAL
03 30 00-B	CONCRETE SLAB ON METAL DECK- SEE STRUCTURAL
03 30 00-D	CONCRETE FOOTING- SEE STRUCTURAL
03 30 00-F	1/2" EXPANSION MATERIAL
04 20 00-A	GROUT SOLID
04 20 00-B	ADJUSTIBLE MASONRY VENEER ANCHOR AT 16" O.C. VERTICALLY
04 20 00-D	WEEP HOLES AT 16" O.C.
04 20 00-F	CAVITY DRAINAGE MATERIAL
04 20 00-G	BRICK TYPE 1
04 20 00-H	BRICK TYPE 2 (ACCENT)
04 20 00-I	CONCRETE MASONRY UNIT
04 20 00-J	BOND BEAM MASONRY UNIT
04 20 00-K	GROUND FACE CONCRETE MASONRY UNIT
05 12 00-A	STRUCTURAL STEEL FRAMING MEMBER- SEE STRUCTURAL
05 21 00-A	STEEL JOIST- SEE STRUCTURAL
05 21 00-B	STEEL JOIST GIRDER- SEE STRUCTURAL
05 31 00-A	METAL ROOF DECKING- SEE STRUCTURAL
05 31 00-B	METAL FLOOR DECKING- SEE STRUCTURAL
05 31 00-C	METAL DECK CLOSURE
05 40 00-B	3 5/8" 16 GA. MIN GALVANIZED STEEL STUD
05 40 00-D	6" 16 GA. MIN GALVANIZED STEEL STUD
05 40 00-G	12" 14 GA. MIN GALVANIZED STEEL STUD TRACK
05 50 00-A	MISCELLANEOUS STEEL - SEE STRUCTURAL
05 50 00-C	PAINTED STEEL BRICK LINTEL
05 50 00-D	STEEL SHELF ANGLE- SEE STRUCTURAL
05 51 00-A	CONCRETE FILLED METAL PAN TREAD AND RISER
05 51 00-B	STAIR METAL STRINGER- TUBE
05 51 00-C	STEEL TUBE LANDING SUPPORT
05 51 00-D	CONCRETE FILLED METAL PAN STAIR LANDING (SEALED)
05 51 00-E	PRECAST POLISHED CONCRETE TREAD (FINISH TO MATCH PC1 SEE A800 SERIES)
05 51 00-F	PRECAST POLISHED CONCRETE STAIR LANDING (FINISH TO MATCH PC1 SEE A800 SERIES)
05 52 13-A	1-1/4" I.D. STAINLESS STEEL PIPE RAILING
05 73 00-A	1-1/4" I.D. STAINLESS STEEL HANDRAIL
05 73 00-B	STAINLESS STEEL HANDRAIL BRACKET
05 73 00-C	STAINLESS STEEL CAP RAIL
05 73 00-D	CORE DRILL AND SET RAILING POST W/NON-SHRINK, NON-METALLIC GROUT
05 73 00-E	1/2" O.D. PAINTED STEEL BALUSTER
05 73 00-F	3/4" X 2" PAINTED STEEL POST
05 73 00-G	2" X 3" POST COVER FLANGE
06 10 53-A	1X WOOD BLOCKING
06 10 53-B	2X WOOD BLOCKING
06 16 00-A	3/4" EXTERIOR GRADE PLYWOOD
06 16 00-B	5/8" EXTERIOR GRADE PLYWOOD
06 16 43-A	5/8" EXTERIOR GYPSUM SHEATHING
06 40 00-A	SOLID PLASTIC SURFACE - 1/2" WINDOW STOOL
07 21 00-A	SLAB PERIMETER RIGID INSULATION (R-15 FOR 24" HORZ. & VERT.)
07 21 00-B	PACK FULL WITH MINERAL WOOL BATT INSULATION
07 21 00-C	3" CAVITY WALL EXTRUDED POLYSTYRENE INSULATION (R-16.8)
07 21 00-D	THERMALLY BROKEN Z-CLIPS @ 16" O.C. VERTICALLY
07 21 00-E	SPRAY APPLIED THERMAL INSULATION (R-20)
07 21 00-F	MINERAL WOOL BATT INSULATION
07 24 15-A	DIRECT APPLIED FINISH SYSTEM (DAFS)- UN-INSULATED SOFFIT
07 25 00-A	WEATHER RESISTIVE BARRIERS- BUILDING WRAP
07 27 26-A	FLUID APPLIED MEMBRANE AIR BARRIER
07 42 13-A	PRE-FINISHED METAL WALL PANEL
07 42 13-B	FLASHING
07 42 13-C	TRIM
07 42 43-A	COMPOSITE METAL WALL PANEL
07 42 43-B	HAT CHANNEL - SEE SECTIONS FOR DEPTH
07 42 43-D	COMPOSITE METAL SOFFIT
07 54 19-A	POLYVINYL-CHLORIDE MEMBRANE (PVC) ROOFING SYSTEM
07 54 19-B	MEMBRANE ROOFING - EXTEND OVER AND ATTACH TO FRONT FACE OF PARAPET
07 54 19-C	2 LAYERS OF 2" POLYISO INSULATION BOARD (R-26)
07 54 19-D	1/2" COVER BOARD
07 54 19-E	TAPERED POLYISO INSULATION BOARD
07 71 00-A	MANUFACTURED COPING
07 71 00-B	MANUFACTURED GRAVEL STOP
07 92 00-A	BACKER ROD AND SEALANT
07 92 00-B	SEALANT EACH SIDE, TYPICAL
07 92 00-C	SEALANT
07 92 00-D	BACKER ROD AND SEALANT EACH SIDE, TYPICAL
08 11 13-A	HOLLOW METAL DOOR
08 11 13-B	HOLLOW METAL DOOR/BORROWED LIGHT FRAME
08 14 16-A	FLUSH WOOD DOOR
08 33 23-A	OVERHEAD COILING DOOR
08 41 13-A	4 1/2" ALUMINUM FRAMED STOREFRONT
08 41 13-B	ALUMINUM ENTRANCE DOOR
08 41 13-C	ALUMINUM BRAKE METAL TO MATCH STOREFRONT FRAME
08 44 13-A	7 1/2" DEEP ALUMINUM CURTAINWALL SYSTEM
08 44 13-B	CURTAINWALL ATTACHMENT MEMBER, ALLOW FOR THERMAL MOVEMENT
08 80 00-A	GLAZING - SEE SCHEDULE/ELEVATIONS
09 22 16-A	7/8" FURRING CHANNEL
09 22 16-B	3 5/8" STEEL STUD
09 22 16-C	6" STEEL STUD
09 22 16-E	METAL STUD KICKERS AS REQUIRED
09 22 16-F	10" STEEL STUD
09 29 00-A	5/8" GYPSUM WALL BOARD (SEE SPECS FOR TYPE)
09 29 00-C	SUSPENDED GYPSUM BOARD CEILING ASSEMBLY
09 29 00-D	METAL J- MOULD
09 51 13-A	ACOUSTICAL CEILING SUSPENSION ASSEMBLY
31 20 00-A	FINISH GRADE- SEE CIVIL SHEETS
32 13 13-A	SIDEWALK- SEE CIVIL SHEETS

MADE @ PLAINFIELD

CSO
8831 Keystone Crossing, Indianapolis, IN 46240
317.848.7600 | csoinc.net
© 2019 CSO Architects, Inc. All Rights Reserved

PROJECT:
TOWN OF PLAINFIELD
MADE@ PLAINFIELD
Red Pride Drive, Plainfield, IN 46168

SCOPE DRAWINGS:
These drawings indicate the general scope of the project in terms of architectural design concept, the dimensions of the building, the general arrangement of spaces and the type of structural, mechanical and electrical systems.
The drawings do not necessarily indicate or describe all work required for the performance and completion of the requirements of the Contract.
On the basis of the general scope indicated or described, the trade contractors shall furnish all items required for the proper execution and completion of the work.

REVISIONS:

1	BP #1 ADD. #1	01-30-20

ISSUE DATE	DRAWN BY	CHECKED BY
01/30/20	BSN	JRF

DRAWING TITLE:
ENALRGED VERTICAL CIRCULATION PLANS AND DETAILS

CERTIFIED BY:
BID PACK 1
NOT FOR CONSTRUCTION

DRAWING NUMBER
A420

PROJECT NUMBER
19004

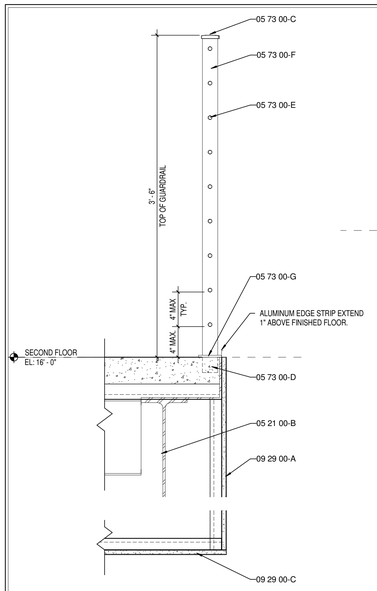

5 A421 ENLARGED RAILING DETAIL
SCALE: 1 1/2" = 1'-0"

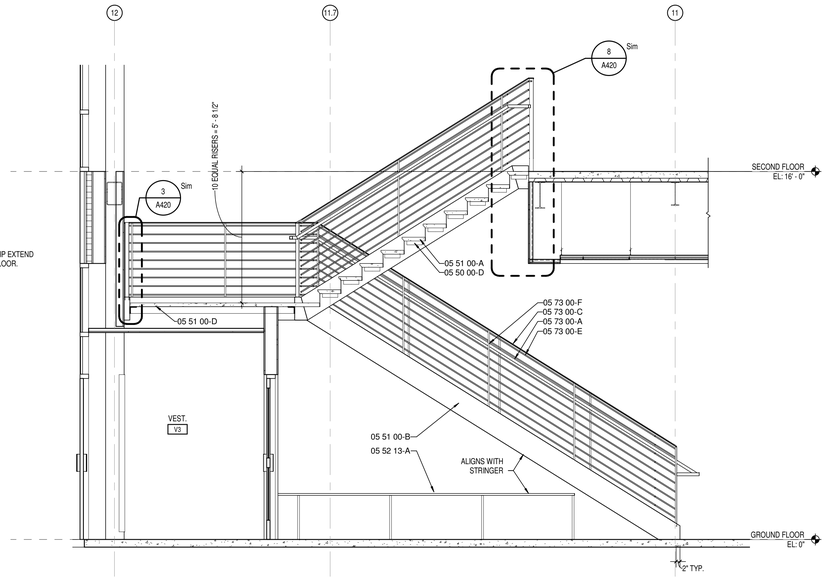

4 A421 ENLARGED STAIR SECTION
SCALE: 3/8" = 1'-0"

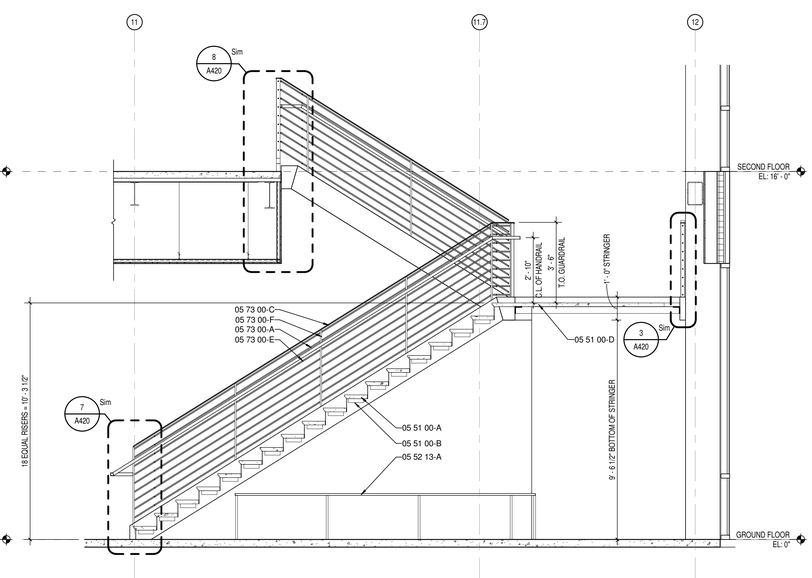

3 A421 ENLARGED STAIR SECTION
SCALE: 3/8" = 1'-0"

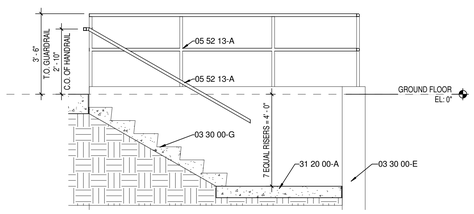

8 A421 ENLARGED STAIR SECTION
SCALE: 3/8" = 1'-0"

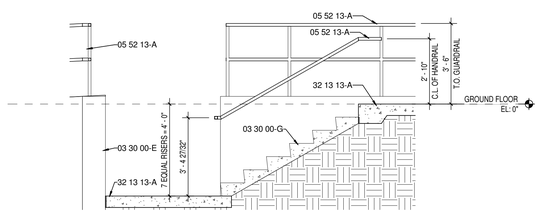

7 A421 ENLARGED STAIR SECTION
SCALE: 3/8" = 1'-0"

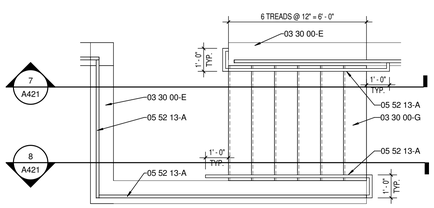

6 A421 ENLARGED STAIR PLAN
SCALE: 3/8" = 1'-0"

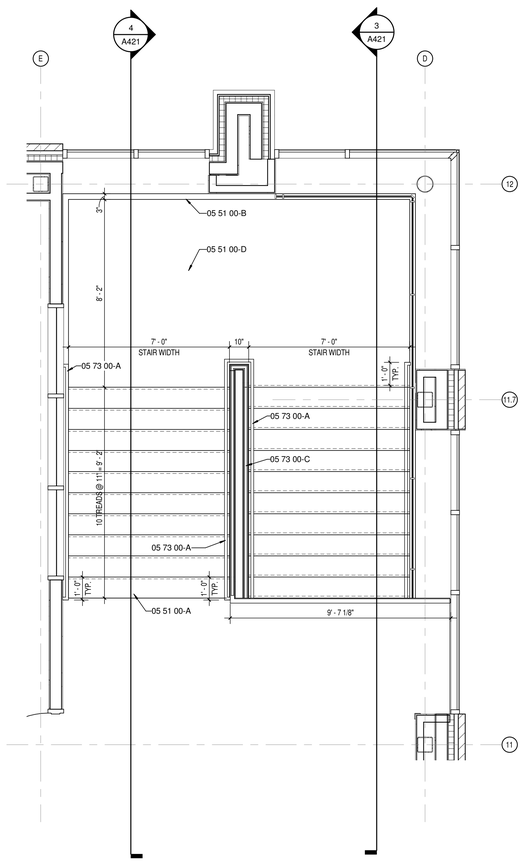

2 A421 SECOND FLOOR ENLARGED STAIR PLAN
SCALE: 3/8" = 1'-0"

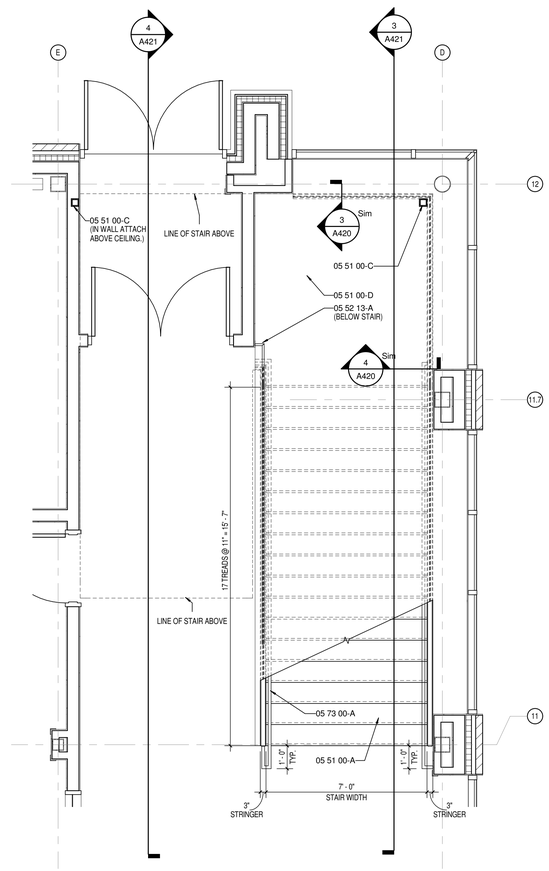

1 A421 GROUND FLOOR ENLARGED STAIR PLAN
SCALE: 3/8" = 1'-0"

KEYNOTE LEGEND

03 30 00-A	CONCRETE SLAB OVER VAPOR BARRIER ON DRAINAGE FILL. SEE STRUCTURAL
03 30 00-B	CONCRETE SLAB ON METAL DECK- SEE STRUCTURAL
03 30 00-D	CONCRETE FOOTING- SEE STRUCTURAL
03 30 00-E	CONCRETE WALL - SEE STRUCTURAL
03 30 00-F	1/2" EXPANSION MATERIAL
03 30 00-G	CONCRETE STAIR ON DRAINAGE FILL. SEE STRUCTURAL
04 20 00-A	GROUT SOLID
04 20 00-B	ADJUSTIBLE MASONRY VENEER ANCHOR AT 16" O.C. VERTICALLY
04 20 00-D	WEEP HOLES AT 16" O.C.
04 20 00-F	CAVITY DRAINAGE MATERIAL
04 20 00-G	BRICK TYPE 1
04 20 00-H	BRICK TYPE 2 (ACCENT)
04 20 00-I	CONCRETE MASONRY UNIT
04 20 00-J	BOND BEAM MASONRY UNIT
04 20 00-K	GROUND FACE CONCRETE MASONRY UNIT
05 12 00-A	STRUCTURAL STEEL FRAMING MEMBER- SEE STRUCTURAL
05 21 00-A	STEEL JOIST- SEE STRUCTURAL
05 21 00-B	STEEL JOIST GIRDER- SEE STRUCTURAL
05 31 00-A	METAL ROOF DECKING- SEE STRUCTURAL
05 31 00-B	METAL FLOOR DECKING- SEE STRUCTURAL
05 31 00-C	METAL DECK CLOSURE
05 40 00-B	3 5/8" 16 GA. MIN GALVANIZED STEEL STUD
05 40 00-D	6" 16 GA. MIN GALVANIZED STEEL STUD
05 40 00-G	12" 14 GA. MIN GALVANIZED STEEL STUD TRACK
05 50 00-A	MISCELLANEOUS STEEL - SEE STRUCTURAL
05 50 00-C	PAINTED STEEL BRICK LINTEL
05 50 00-D	STEEL SHELF ANGLE- SEE STRUCTURAL
05 51 00-A	CONCRETE FILLED METAL PAN TREAD AND RISER
05 51 00-B	STAIR METAL STRINGER- TUBE
05 51 00-C	STEEL TUBE LANDING SUPPORT
05 51 00-D	CONCRETE FILLED METAL PAN STAIR LANDING (SEALED)
05 51 00-E	PRECAST POLISHED CONCRETE TREAD (FINISH TO MATCH PC1 SEE A800 SERIES)
05 51 00-F	PRECAST POLISHED CONCRETE STAIR LANDING (FINISH TO MATCH PC1 SEE A800 SERIES)
05 52 13-A	1-1/4" I.D. STAINLESS STEEL PIPE RAILING
05 73 00-A	1-1/4" I.D. STAINLESS STEEL HANDRAIL
05 73 00-B	STAINLESS STEEL HANDRAIL BRACKET
05 73 00-C	STAINLESS STEEL CAP RAIL
05 73 00-D	CORE DRILL AND SET RAILING POST W/NON-SHRINK, NON-METALLIC GROUT
05 73 00-E	1/2" O.D. PAINTED STEEL BALUSTER
05 73 00-F	3/4" X 2" PAINTED STEEL POST
05 73 00-G	2" X 3" POST COVER FLANGE
06 10 53-A	1X WOOD BLOCKING
06 10 53-B	2X WOOD BLOCKING
06 16 00-A	3/4" EXTERIOR GRADE PLYWOOD
06 16 00-B	5/8" EXTERIOR GRADE PLYWOOD
06 16 43-A	5/8" EXTERIOR GYPSUM SHEATHING
06 40 00-A	SOLID PLASTIC SURFACE - 1-/2" WINDOW STOOL
07 21 00-A	SLAB PERIMETER RIGID INSULATION (R-15 FOR 24" HORZ. & VERT.)
07 21 00-B	PACK FULL WITH MINERAL WOOL BATT INSULATION
07 21 00-C	3" CAVITY WALL EXTRUDED POLYSTYRENE INSULATION (R-16.8)
07 21 00-D	THERMALLY BROKEN Z-CLIPS @ 16" O.C. VERTICALLY
07 21 00-E	SPRAY APPLIED THERMAL INSULATION (R-20)
07 21 00-F	MINERAL WOOL BATT INSULATION
07 24 15-A	DIRECT APPLIED FINISH SYSTEM (DAFS)- UN-INSULATED SOFFIT
07 25 00-A	WEATHER RESISTIVE BARRIERS- BUILDING WRAP
07 27 26-A	FLUID APPLIED MEMBRANE AIR BARRIER
07 42 13-A	PRE-FINISHED METAL WALL PANEL
07 42 13-B	FLASHING
07 42 13-C	TRIM
07 42 43-A	COMPOSITE METAL WALL PANEL
07 42 43-B	HAT CHANNEL - SEE SECTIONS FOR DEPTH
07 42 43-D	COMPOSITE METAL SOFFIT
07 54 19-A	POLYVINYL-CHLORIDE MEMBRANE (PVC) ROOFING SYSTEM
07 54 19-B	MEMBRANE ROOFING - EXTEND OVER AND ATTACH TO FRONT FACE OF PARAPET
07 54 19-C	2 LAYERS OF 2" POLYISO INSULATION BOARD (R-26)
07 54 19-D	1/2" COVER BOARD
07 54 19-E	TAPERED POLYISO INSULATION BOARD
07 71 00-A	MANUFACTURED COPING
07 71 00-B	MANUFACTURED GRAVEL STOP
07 92 00-A	BACKER ROD AND SEALANT
07 92 00-B	SEALANT EACH SIDE, TYPICAL
07 92 00-C	SEALANT
07 92 00-D	BACKER ROD AND SEALANT EACH SIDE, TYPICAL
08 11 13-A	HOLLOW METAL DOOR
08 11 13-B	HOLLOW METAL DOOR/BORROWED LIGHT FRAME
08 14 16-A	FLUSH WOOD DOOR
08 33 23-A	OVERHEAD COILING DOOR
08 41 13-A	4 1/2" ALUMINUM-FRAMED STOREFRONT
08 41 13-B	ALUMINUM ENTRANCE DOOR
08 41 13-C	ALUMINUM BRAKE METAL TO MATCH STOREFRONT FRAME
08 44 13-A	7 1/2" DEEP ALUMINUM CURTAINWALL SYSTEM
08 44 13-B	CURTAINWALL ATTACHMENT MEMBER, ALLOW FOR THERMAL MOVEMENT
08 80 00-A	GLAZING - SEE SCHEDULE/ELEVATIONS
09 22 16-A	7/8" FURRING CHANNEL
09 22 16-B	3 5/8" STEEL STUD
09 22 16-C	6" STEEL STUD
09 22 16-E	METAL STUD KICKERS AS REQUIRED
09 22 16-F	10" STEEL STUD
09 29 00-A	5/8" GYPSUM WALL BOARD (SEE SPECS FOR TYPE)
09 29 00-C	SUSPENDED GYPSUM BOARD CEILING ASSEMBLY
09 29 00-D	METAL J- MOULD
09 51 13-A	ACOUSTICAL CEILING SUSPENSION ASSEMBLY
31 20 00-A	FINISH GRADE- SEE CIVIL SHEETS
32 13 13-A	SIDEWALK- SEE CIVIL SHEETS

CSO
8831 Keystone Crossing, Indianapolis, IN 46240
317.848.7600 | csoinc.net

© 2019 CSO Architects, Inc. All Rights Reserved

PROJECT:
TOWN OF PLAINFIELD
MADE@ PLAINFIELD
Red Pride Drive, Plainfield, IN 46168

SCOPE DRAWINGS:
These drawings indicate the general scope of the project in terms of architectural design concept, the dimensions of the building, the general construction materials and the type of structural, mechanical and electrical patterns.
The drawings do not necessarily indicate or describe all items required for the performance and completion of the requirements of the Contract.
On the basis of the general scope indicated or described, the trade contractors shall furnish all items required for the proper execution and completion of the work.

REVISIONS:

1	BP #1 ADD. #1	01-30-20

ISSUE DATE	DRAWN BY	CHECKED BY
01/30/20	BSN	JRF

DRAWING TITLE:
ENALRGED VERTICAL CIRCULATION PLANS AND DETAILS

CERTIFIED BY:
BID PACK 1
NOT FOR CONSTRUCTION

DRAWING NUMBER
A421

PROJECT NUMBER
19004

DOOR AND FRAME SCHEDULE																		
DOOR									FRAME							UL RATING	STC RATING	REMARKS
	SIZE												DETAIL					
MARK		WIDTH	HEIGHT	THICKNESS	MATERIAL	FINISH	ELEVATION	GLASS	MATERIAL	FINISH	ELEVATION	GLASS	HEAD	JAMB	SILL			
102	SGL	3' - 0"	7' - 0"	1 3/4"	WD	ST	D1	-	HM	PT	F1	-	-	-	-	-	-	-
102B-2	SGL	3' - 0"	7' - 0"	1 3/4"	WD	ST	D2	2	HM	PT	F1	-	-	-	-	-	-	-
103-1	SGL	3' - 0"	7' - 0"	1 3/4"	WD	ST	D2	2	HM	PT	F1	-	-	-	-	-	-	-
103-2	PAIR	3' - 0"	7' - 0"	1 3/4"	WD	ST	D1	-	HM	PT	F3	-	-	-	-	-	-	-
104	SGL	3' - 0"	7' - 0"	1 3/4"	WD	ST	D2	2	HM	PT	F5	-	-	-	-	-	-	-
105-1	SGL	3' - 0"	7' - 0"	1 3/4"	AL	AN	D3	2	AL	AN	F16	2	-	-	-	-	-	-
105-2	SGL	3' - 0"	7' - 0"	1 3/4"	WD	ST	D2	2	HM	PT	F1	-	-	-	-	-	-	-
105A	SGL	3' - 0"	7' - 0"	1 3/4"	WD	ST	D3	2	HM	PT	F1	-	-	-	-	-	-	-
105B	SGL	3' - 0"	7' - 0"	1 3/4"	WD	ST	D3	2	HM	PT	F1	-	-	-	-	-	-	-
105C	SGL	3' - 0"	7' - 0"	1 3/4"	WD	ST	D2	2	HM	PT	F1	-	-	-	-	-	-	-
105D	SGL	3' - 0"	7' - 0"	1 3/4"	WD	ST	D1	-	HM	PT	F1	-	-	-	-	-	-	-
105E	SGL	3' - 0"	7' - 0"	1 3/4"	WD	ST	D2	2	HM	PT	F1	-	-	-	-	-	-	-
107	SGL	3' - 0"	7' - 0"	1 3/4"	WD	ST	D1	-	HM	PT	F1	-	-	-	-	-	-	-
108	SGL	3' - 0"	7' - 0"	1 3/4"	WD	ST	D1	-	HM	PT	F1	-	-	-	-	-	-	-
109	SGL	3' - 0"	7' - 0"	1 3/4"	WD	ST	D1	-	HM	PT	F1	-	-	-	-	-	-	-
110	SGL	3' - 0"	7' - 0"	1 3/4"	WD	ST	D1	-	HM	PT	F1	-	-	-	-	-	-	-
111	SGL	3' - 0"	7' - 0"	1 3/4"	WD	ST	D1	-	HM	PT	F1	-	-	-	-	-	-	-
112-1	SGL	3' - 0"	7' - 0"	1 3/4"	WD	ST	D1	-	HM	PT	F5	2	-	-	-	-	-	-
112-2	SGL	3' - 0"	7' - 0"	1 3/4"	WD	ST	D1	-	HM	PT	F1	-	-	-	-	-	50	-
112B	SGL	3' - 0"	7' - 0"	1 3/4"	WD	ST	D1	-	HM	PT	F1	-	-	-	-	-	-	-
113	SGL	3' - 0"	7' - 0"	1 3/4"	WD	ST	D2	2	HM	PT	F1	-	-	-	-	-	-	-
114	SGL	3' - 0"	7' - 0"	1 3/4"	WD	ST	D2	2	HM	PT	F1	-	-	-	-	-	-	-
115-1	SGL	3' - 0"	7' - 0"	1 3/4"	WD	ST	D2	2	HM	PT	F1	-	-	-	-	-	-	-
115-2	SGL	3' - 0"	7' - 0"	1 3/4"	WD	ST	D2	2	HM	PT	F1	-	-	-	-	-	-	-
116	SGL	3' - 0"	7' - 0"	1 3/4"	WD	ST	D2	2	HM	PT	F1	-	-	-	-	-	-	-
117	SGL	3' - 0"	7' - 0"	1 3/4"	WD	ST	D1	-	HM	PT	F1	-	-	-	-	-	-	-
118	SGL	3' - 0"	7' - 0"	1 3/4"	WD	ST	D1	-	HM	PT	F1	-	-	-	-	-	-	-
119	SGL	3' - 0"	7' - 0"	1 3/4"	WD	ST	D1	-	HM	PT	F1	-	-	-	-	-	-	-
120	SGL	3' - 0"	7' - 0"	1 3/4"	WD	ST	D2	2	HM	PT	F5	-	-	-	-	-	-	-
120A	SGL	3' - 0"	7' - 0"	1 3/4"	WD	ST	D1	-	HM	PT	F1	-	-	-	-	-	-	-
120B-1	SGL	3' - 0"	7' - 0"	1 3/4"	WD	ST	D2	2	HM	PT	F1	-	-	-	-	-	-	-
121-1	SGL	3' - 0"	7' - 0"	1 3/4"	WD	ST	D1	-	HM	PT	F1	-	-	-	-	-	-	-
121-2	SGL	3' - 0"	7' - 0"	1 3/4"	WD	ST	D1	-	HM	PT	F1	-	-	-	-	-	-	-
122-1	PAIR	3' - 0"	7' - 0"	1 3/4"	WD	ST	D1	-	HM	PT	F3	-	-	-	-	-	-	-
122-2	PAIR	3' - 0"	7' - 0"	1 3/4"	HM	PT	D1	-	HM	PT	F4	-	-	-	-	-	-	-
122A	SGL	3' - 0"	7' - 0"	1 3/4"	WD	ST	D1	-	HM	PT	F1	-	-	-	-	-	-	-
123-1	SGL	3' - 0"	7' - 0"	1 3/4"	WD	ST	D1	-	HM	PT	F1	-	-	-	-	-	-	-
123-2	SGL	3' - 0"	7' - 0"	1 3/4"	WD	ST	D2	2	HM	PT	F1	-	-	-	-	-	-	-
124-1	SGL	3' - 0"	7' - 0"	1 3/4"	WD	ST	D1	-	HM	PT	F2	-	-	-	-	-	-	-
124-2	SGL	3' - 0"	7' - 0"	1 3/4"	HM	PT	D1	-	HM	PT	F2	-	-	-	-	-	-	-
125-1	SGL	3' - 0"	7' - 0"	1 3/4"	WD	ST	D2	2	HM	PT	F1	-	-	-	-	-	-	-
125-2	PAIR	3' - 0"	7' - 0"	1 3/4"	WD	ST	D2	2	HM	PT	F3	-	-	-	-	-	-	-
125-3	PAIR	3' - 0"	7' - 0"	1 3/4"	WD	ST	D2	2	HM	PT	F3	-	-	-	-	-	-	-
126-1	PAIR	3' - 0"	7' - 0"	1 3/4"	WD	ST	D1	-	HM	PT	F4	-	-	-	-	-	-	-
126-2	SGL	3' - 0"	7' - 0"	1 3/4"	HM	PT	D1	-	HM	PT	F2	-	-	-	-	-	-	-
127	SGL	3' - 0"	7' - 0"	1 3/4"	WD	ST	D2	2	HM	PT	F1	-	-	-	-	-	-	-
128	SGL	3' - 0"	7' - 0"	1 3/4"	WD	ST	D1	-	HM	PT	F1	-	-	-	-	-	-	-
129-1	PAIR	3' - 0"	7' - 0"	1 3/4"	WD	ST	D2	2	HM	PT	F3	-	-	-	-	-	-	-
129-2	SGL	3' - 0"	7' - 0"	1 3/4"	WD	ST	D2	2	HM	PT	F1	-	-	-	-	-	-	-
129-3	OSD	12' - 0"	12' - 0"	2 1/8"	STL	PT		2	-	-		-						
129A	PAIR	3' - 0"	7' - 0"	1 3/4"	WD	ST	D1	-	HM	PT	F3	-	-	-	-	-	-	-
130	PAIR	3' - 0"	7' - 0"	1 3/4"	WD	ST	D1	-	HM	PT	F3	-	-	-	-	-	-	-
132A	SGL	3' - 0"	7' - 0"	1 3/4"	WD	ST	D1	-	HM	PT	F1	-	-	-	-	-	-	-
133	SGL	3' - 0"	7' - 0"	1 3/4"	WD	ST	D1	-	HM	PT	F1	-	-	-	-	-	-	-
134A	PAIR	3' - 0"	7' - 0"	1 3/4"	WD	ST	D1	-	HM	PT	F3	-	-	-	-	-	-	-
134B	PAIR	3' - 0"	7' - 0"	1 3/4"	WD	ST	D1	-	HM	PT	F3	-	-	-	-	-	-	-
135	PAIR	3' - 0"	7' - 0"	1 3/4"	WD	ST	D1	-	HM	PT	F3	-	-	-	-	-	-	-
136-1	SGL	3' - 0"	7' - 0"	1 3/4"	WD	ST	D1	-	HM	PT	F1	-	-	-	-	-	-	-
136-2	SGL	3' - 0"	7' - 0"	1 3/4"	WD	ST	D1	-	HM	PT	F1	-	-	-	-	-	-	-
137-1	SGL	3' - 0"	7' - 0"	1 3/4"	WD	ST	D2	2	HM	PT	F1	-	-	-	-	-	-	-
137-2	PAIR	3' - 0"	7' - 0"	1 3/4"	WD	ST	D2	2	HM	PT	F3	-	-	-	-	-	-	-
138	PAIR	3' - 0"	7' - 0"	1 3/4"	WD	ST	D1	-	HM	PT	F3	-	-	-	-	-	-	-
139	SGL	3' - 0"	7' - 0"	1 3/4"	WD	ST	D2	2	HM	PT	F1	-	-	-	-	-	-	-
140	SGL	3' - 0"	7' - 0"	1 3/4"	WD	ST	D2	2	HM	PT	F1	-	-	-	-	-	-	-
141-1	SGL	3' - 0"	7' - 0"	1 3/4"	HM	PT	D1	-	HM	PT	F2	-	-	-	-	-	-	-
141-2	OCD	12' - 0"	14' - 0"	1"	-	-	D8	-	-	-	-	-	-	-	-	-	-	-
141-3	OCD	9' - 4"	8' - 5 1/2"	1"	STL	PT	D8	-	-	-	-	-	-	-	-	-	-	-
141-4	OCD	9' - 4"	8' - 5 1/2"	1"	STL	PT	D8	-	-	-	-	-	-	-	-	-	-	-
141-5	PAIR	3' - 0"	7' - 0"	1 3/4"	WD	ST	D2	2	HM	PT	F3	-	-	-	-	-	-	-
142-1	SGL	3' - 0"	7' - 0"	1 3/4"	HM	PT	D1	-	HM	PT	F2	-	-	-	-	-	-	-
142-2	OCD	12' - 0"	14' - 0"	1"	STL	PT	D8	-	-	-	-	-	-	-	-	-	-	-
142-3	PAIR	3' - 0"	7' - 0"	1 3/4"	WD	ST	D2	2	HM	PT	F3	-	-	-	-	-	-	-
142A	PAIR	3' - 0"	7' - 0"	1 3/4"	WD	ST	D1	-	HM	PT	F3	-	-	-	-	-	-	-
143	SGL	3' - 0"	7' - 0"	1 3/4"	WD	ST	D2	2	HM	PT	F1	-	-	-	-	-	-	-
144	SGL	3' - 0"	7' - 0"	1 3/4"	WD	ST	D2	2	HM	PT	F1	-	-	-	-	-	-	-
145	SGL	3' - 0"	7' - 0"	1 3/4"	WD	ST	D1	-	HM	PT	F1	-	-	-	-	-	-	-
146	SGL	3' - 0"	7' - 0"	1 3/4"	WD	ST	D1	-	HM	PT	F1	-	-	-	-	-	-	-
147-1	SGL	3' - 0"	7' - 0"	1 3/4"	WD	ST	D2	2	HM	PT	F1	-	-	-	-	-	-	-
147-2	SGL	3' - 0"	7' - 0"	1 3/4"	WD	ST	D2	2	HM	PT	F1	-	-	-	-	-	-	-
148	SGL	3' - 0"	7' - 0"	1 3/4"	WD	ST	D2	2	HM	PT	F1	-	-	-	-	-	-	-
149-1	SGL	3' - 0"	7' - 0"	1 3/4"	WD	ST	D2	2	HM	PT	F1	-	-	-	-	-	-	-
149-2	SGL	3' - 0"	7' - 0"	1 3/4"	WD	ST	D2	2	HM	PT	F1	-	-	-	-	-	-	-
202	SGL	3' - 0"	7' - 0"	1 3/4"	WD	ST	D1	-	HM	PT	F1	-	-	-	-	-	-	-
203	PAIR	3' - 0"	7' - 0"	1 3/4"	AL	AN	D3	2	AL	AN	F17	2	-	-	-	-	-	-
203A	SGL	3' - 10"	7' - 0"	1 3/4"	AL	AN	D4	2	AL	AN	F-	2	-	-	-	-	-	-
203B	SGL	3' - 0"	7' - 0"	1 3/4"	WD	ST	D1	-	HM	PT	F1	-	-	-	-	-	-	-
203C	SGL	3' - 10"	7' - 0"	1 3/4"	AL	AN	D4	2	AL	AN	F-	2	-	-	-	-	-	-
203D	SGL	3' - 10"	6' - 10"	1 3/4"	AL	AN	D4	2	AL	AN	F-	2	-	-	-	-	-	-
204	SGL	3' - 0"	7' - 0"	1 3/4"	WD	ST	D1	-	HM	PT	F1	-	-	-	-	-	-	-
205	SGL	3' - 0"	7' - 0"	1 3/4"	WD	ST	D1	-	HM	PT	F1	-	-	-	-	-	-	-
206	SGL	3' - 0"	7' - 0"	1 3/4"	WD	ST	D1	-	HM	PT	F1	-	-	-	-	-	-	-
207	SGL	3' - 0"	7' - 0"	1 3/4"	WD	ST	D1	-	HM	PT	F1	-	-	-	-	-	-	-
208	SGL	3' - 0"	7' - 0"	1 3/4"	WD	ST	D1	-	HM	PT	F1	-	-	-	-	-	-	-
209	SGL	3' - 0"	7' - 0"	1 3/4"	WD	ST	D1	-	HM	PT	F1	-	-	-	-	-	-	-
210	SGL	3' - 0"	7' - 0"	1 3/4"	WD	ST	D2	2	HM	PT	F1	-	-	-	-	-	-	-
211	SGL	3' - 0"	7' - 0"	1 3/4"	WD	ST	D2	-	HM	PT	F5	-	-	-	-	-	-	-
211A	SGL	3' - 0"	7' - 0"	1 3/4"	WD	ST	D1	-	HM	PT	F1	-	-	-	-	-	-	-
212	SGL	3' - 0"	7' - 0"	1 3/4"	WD	ST	D2	2	HM	PT	F1	-	-	-	-	-	-	-
213	SGL	3' - 0"	7' - 0"	1 3/4"	WD	ST	D2	2	HM	PT	F1	-	-	-	-	-	-	-
214-1	SGL	3' - 0"	7' - 0"	1 3/4"	WD	ST	D1	-	HM	PT	F5	2	-	-	-	-	-	-
214-2	PAIR	3' - 0"	7' - 0"	1 3/4"	WD	ST	D2	2	HM	PT	F3	-	-	-	-	-	-	-
215	SGL	3' - 0"	7' - 0"	1 3/4"	WD	ST	D2	2	HM	PT	F1	-	-	-	-	-	-	-
216	PAIR	3' - 0"	7' - 0"	1 3/4"	WD	ST	D2	2	HM	PT	F3	-	-	-	-	-	-	-
217	SGL	3' - 0"	7' - 0"	1 3/4"	WD	ST	D1	-	HM	PT	F1	-	-	-	-	-	-	-
218	SGL	3' - 0"	7' - 0"	1 3/4"	WD	ST	D1	-	HM	PT	F1	-	-	-	-	-	-	-
219	SGL	3' - 0"	7' - 0"	1 3/4"	WD	ST	D1	-	HM	PT	F1	-	-	-	-	-	-	-
221	SGL	3' - 0"	7' - 0"	1 3/4"	WD	ST	D1	-	HM	PT	F1	-	-	-	-	-	-	-
222-1	SGL	3' - 0"	7' - 0"	1 3/4"	WD	ST	D1	-	HM	PT	F5	2	-	-	-	-	-	-
222-2	PAIR	3' - 0"	7' - 0"	1 3/4"	WD	ST	D2	2	HM	PT	F3	-	-	-	-	-	-	-
223	SGL	3' - 0"	7' - 0"	1 3/4"	WD	ST	D1	-	HM	PT	F1	-	-	-	-	-	-	-
224	SGL	3' - 0"	7' - 0"	1 3/4"	WD	ST	D2	2	HM	PT	F1	-	-	-	-	-	-	-
225	SGL	3' - 0"	7' - 0"	1 3/4"	WD	ST	D1	-	HM	PT	F1	-	-	-	-	-	-	-
225B-1	SGL	3' - 0"	7' - 0"	1 3/4"	WD	ST	D1	-	HM	PT	F1	-	-	-	-	-	-	-
225B-2	SGL	3' - 0"	7' - 0"	1 3/4"	WD	ST	D1	-	HM	PT	F1	-	-	-	-	-	-	-
226	SGL	3' - 0"	7' - 0"	1 3/4"	WD	ST	D1	-	HM	PT	F1	-	-	-	-	-	-	-
227	SGL	3' - 0"	7' - 0"	1 3/4"	WD	ST	D1	-	HM	PT	F1	-	-	-	-	-	-	-
227A	SGL	3' - 0"	7' - 0"	1 3/4"	WD	ST	D1	-	HM	PT	F1	-	-	-	-	-	-	-
227B	SGL	3' - 0"	7' - 0"	1 3/4"	WD	ST	D1	-	HM	PT	F1	-	-	-	-	-	-	-
227C	SGL	3' - 0"	7' - 0"	1 3/4"	WD	ST	D1	-	HM	PT	F1	-	-	-	-	-	-	-
228	SGL	3' - 0"	7' - 0"	1 3/4"	WD	ST	D1	-	HM	PT	F1	-	-	-	-	-	-	-
229-1	PAIR	3' - 0"	7' - 0"	1 3/4"	AL	AN	D3	2	AL	AN	F17	2	-	-	-	-	-	-
229-2	PAIR	3' - 0"	7' - 0"	1 3/4"	AL	AN	D3	2	AL	AN	F18	2	-	-	-	-	-	-
229-3	SGL	3' - 0"	7' - 0"	1 3/4"	AL	AN	D3	2	AL	AN	F20	2	-	-	-	-	-	-
231A	SGL	3' - 0"	7' - 0"	1 3/4"	WD	ST	D1	-	HM	PT	F1	-	-	-	-	-	-	-
232	SGL	3' - 0"	7' - 0"	1 3/4"	WD	ST	D1	-	HM	PT	F1	-	-	-	-	-	-	-
233	SGL	3' - 0"	7' - 0"	1 3/4"	WD	ST	D1	-	HM	PT	F1	-	-	-	-	-	-	-
234	SGL	3' - 0"	7' - 0"	1 3/4"	WD	ST	D1	-	HM	PT	F1	-	-	-	-	-	-	-
235	SGL	3' - 0"	7' - 0"	1 3/4"	WD	ST	D1	-	HM	PT	F1	-	-	-	-	-	-	-
236	SGL	3' - 0"	7' - 0"	1 3/4"	WD	ST	D2	2	HM	PT	F1	-	-	-	-	-	-	-
236A	SGL	3' - 0"	7' - 0"	1 3/4"	WD	ST	D1	-	HM	PT	F1	-	-	-	-	-	-	-
237A	SGL	3' - 0"	7' - 0"	1 3/4"	WD	ST	D1	-	HM	PT	F1	-	-	-	-	-	-	-
237B	SGL	3' - 0"	7' - 0"	1 3/4"	WD	ST	D1	-	HM	PT	F1	-	-	-	-	-	-	-
238	SGL	3' - 0"	7' - 0"	1 3/4"	WD	ST	D2	2	HM	PT	F1	-	-	-	-	-	-	-
239	SGL	3' - 0"	7' - 0"	1 3/4"	WD	ST	D1	-	HM	PT	F1	-	-	-	-	-	-	-
240	SGL	3' - 0"	7' - 0"	1 3/4"	WD	ST	D1	-	HM	PT	F1	-	-	-	-	-	-	-
g2	PAIR	1' - 5 7/16"	0"	1 3/4"	AL	AN	D3	4	AL	AN	F3	4	-	-	-	-	-	-
V1-1	PAIR	3' - 0"	7' - 0"	1 3/4"	AL	AN	D3	1	AL	AN	F28	1	-	-	-	-	-	-
V1-2	PAIR	3' - 0"	7' - 0"	1 3/4"	AL	AN	D3	1	AL	AN	F28	1	-	-	-	-	-	-
V1-3	PAIR	3' - 0"	7' - 0"	1 3/4"	AL	AN	D3	4	AL	AN	F11	4	-	-	-	-	-	-
V1-4	PAIR	3' - 0"	7' - 0"	1 3/4"	AL	AN	D3	4	AL	AN	F11	4	-	-	-	-	-	-
V2-1	PAIR	3' - 0"	7' - 0"	1 3/4"	AL	AN	D3	4	AL	AN	F3	4	-	-	-	-	-	-
V2-2	PAIR	3' - 0"	7' - 0"	1 3/4"	AL	-	D3	-	AL	-	F-	-	-	-	-	-	-	-
V3-1	PAIR	3' - 0"	7' - 0"	1 3/4"	AL	AN	D3	4	AL	AN	F3	4	-	-	-	-	-	-
V3-2	PAIR	3' - 0"	7' - 0"	1 3/4"	AL	-	D3	-	AL	-	F-	-	-	-	-	-	-	-
V3-3	PAIR	1' - 5 7/16"	0"	1 3/4"	AL	-	D3	-	AL	-	F-	-	-	-	-	-	-	-

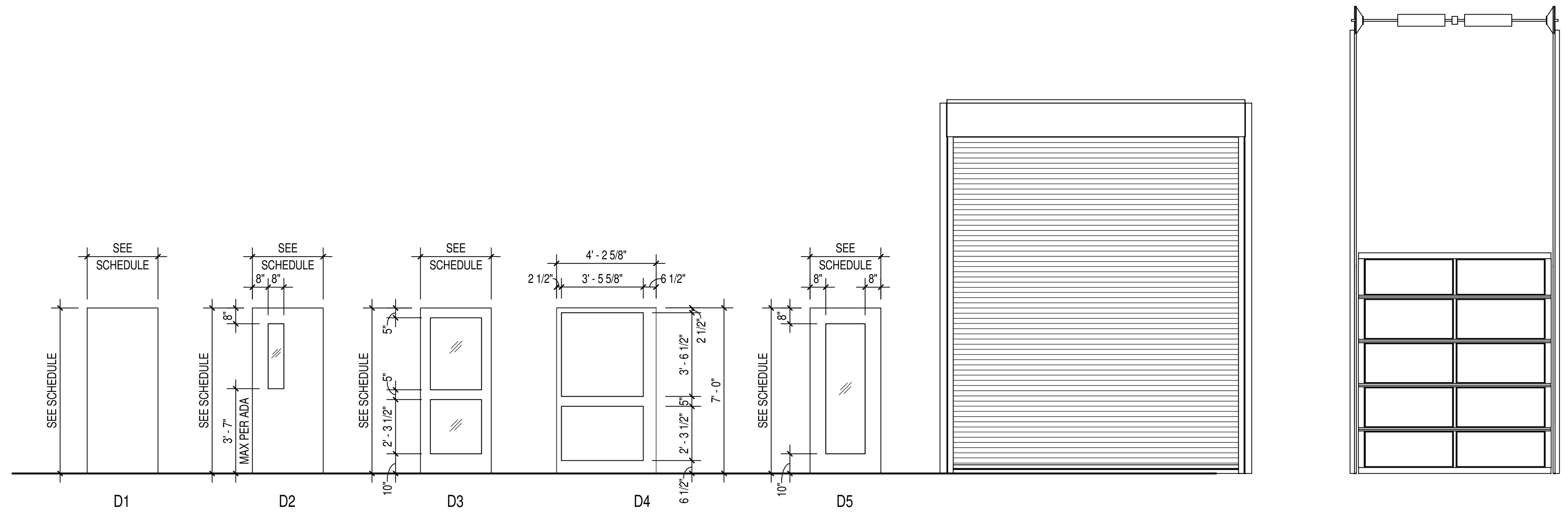

DOOR ELEVATIONS

SCALE: 1/4" = 1'-0"

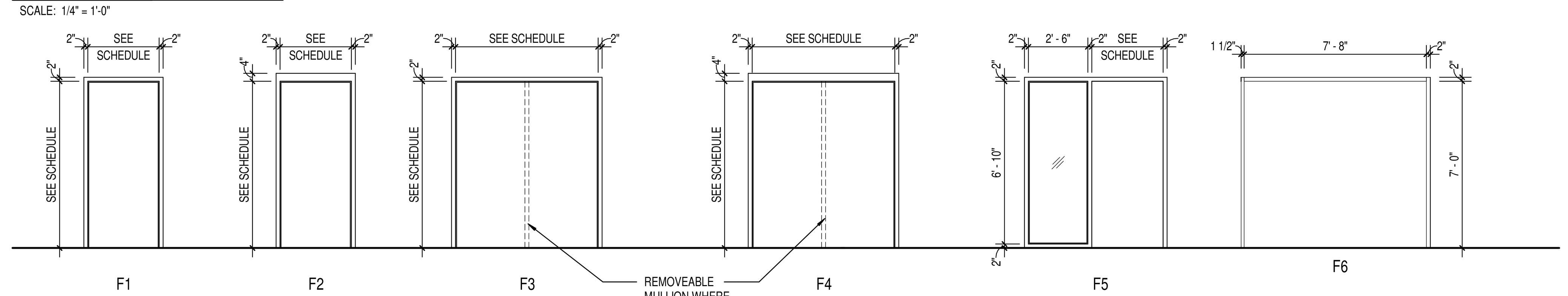

FRAME ELEVATIONS

SCALE: 1/4" = 1'-0"

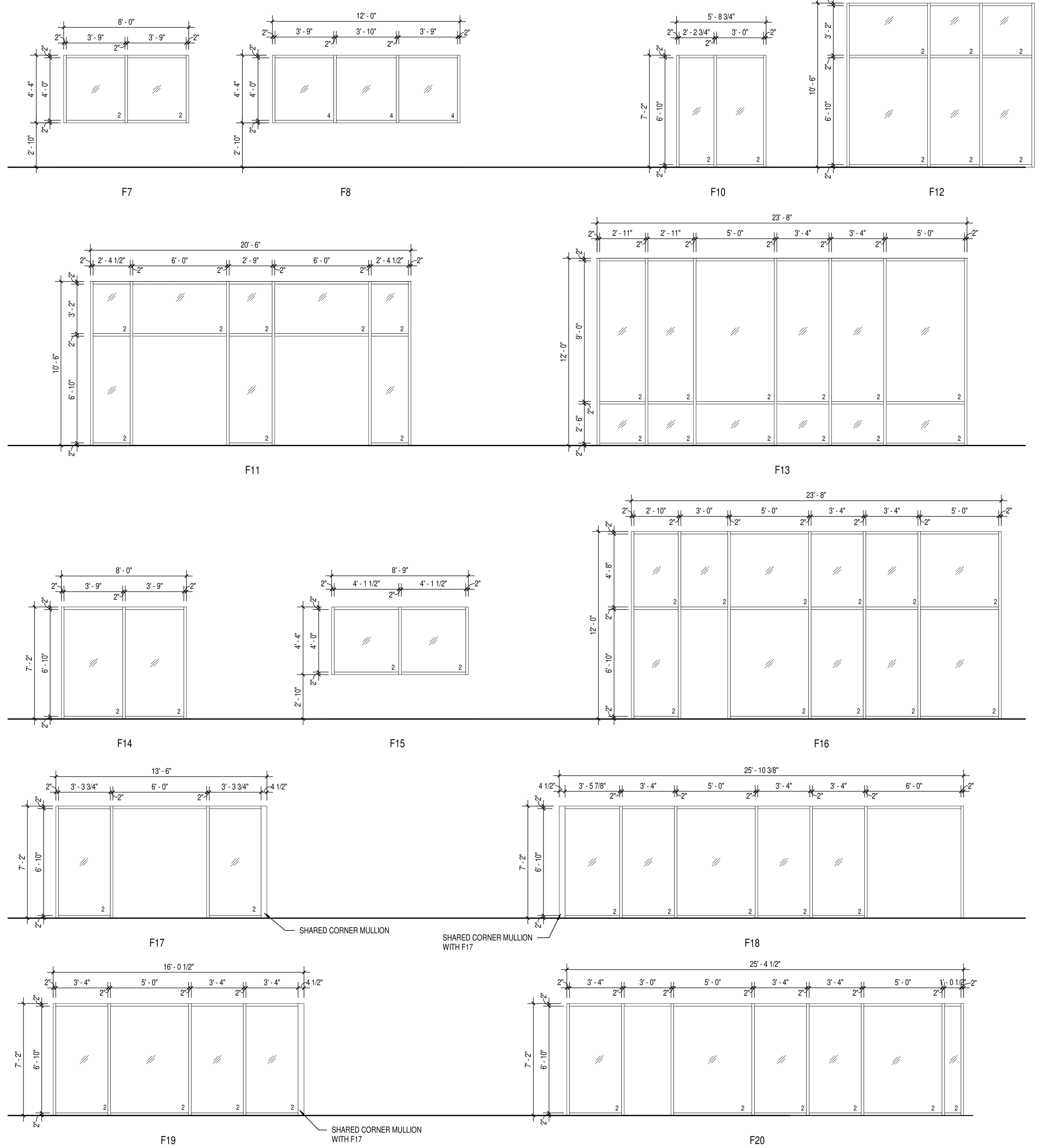

GLASS SCHEDULE

1. 1" THICK TEMPERED, LOW E, INSULATING GLAZING WITH 2 PANES 1/4" GLASS AND 1/2" AIRSPACE.
2. 1/4" CLEAR TEMPERED GLASS.
3. SPANDREL GLASS.
4. 5/16" CLEAR LAMINATED GLASS.

ABBREVIATIONS LEGEND

AL = ALUMINUM
AN = ANODIZED
BL = BORROWED LITE
GHM = GALVANNEALED HOLLOW METAL
GL = GLASS
HM = HOLLOW METAL
PT = PAINT
ST = STAIN
SS = STAINLESS STEEL
STL = STEEL
WD = WOOD
90M = 90 MINUTE ASSEMBLY RATING
* = SEE REMARKS COLUMN FOR NOTES

GENERAL DOOR NOTES

A. THESE GENERAL NOTES APPLY TO THE DOOR SCHEDULE.
B. DOOR AND FRAME NUMBERS CORRESPOND TO RESPECTIVE ROOM NUMBER. IN ROOMS WITH MULTIPLE OPENINGS, A NUMERICAL SUFFIX HAS BEEN ADDED TO DOOR NUMBERS.
C. VERTICAL FRAMING MEMBERS AT ALL DOOR FRAMES SHALL EXTEND TO STRUCTURE ABOVE.
D. UNDERCUT ALL DOORS AS REQUIRED BY FINAL FINISH.
E. PROVIDE CONTINUOUS SEALANT BETWEEN HOLLOW METAL FRAME PERIMETERS AND SURROUNDING WALL CONSTRUCTION.
F. PROVIDE CONTINUOUS SEALANT BETWEEN INTERIOR AND EXTERIOR WINDOW, CURTAINWALL AND STOREFRONT FRAME PERIMETERS AND SURROUNDING CONSTRUCTION UNLESS NOTED OTHERWISE.
G. GROUT FULL HOLLOW METAL FRAMES IN MASONRY CONSTRUCTION.
H. SPOT GROUT HOLLOW METAL FRAMES IN GYPSUM WALLS.
I. WHERE A FIRE RATING IS INDICATED ON THE DOOR SCHEDULE, HARDWARE AND DOOR ASSEMBLY COMPONENTS SHALL MEET THE REQUIREMENTS OF THAT LABEL.
J. WHERE AN STC RATING IS INDICATED ON THE DOOR SCHEDULE, HARDWARE AND DOOR ASSEMBLY COMPONENTS SHALL MEET THE REQUIREMENTS OF THAT LABEL.
K. INSTALL DOOR GLASS USING WET GLAZING METHOD.
L. ALL LINTELS ABOVE EXTERIOR OPENINGS SHALL BE GALVANIZED.
M. REFER TO SHEETS AXXX & AXXX FOR ADDITIONAL DOOR, FRAME AND BORROWED LITE ELEVATIONS.
N. COORDINATE THROAT OPENINGS WITH WALL WIDTH FOR ALL WRAP AROUND FRAMES.
O. SCHEDULED HARDWARE FOR ALUMINUM DOORS SHALL BE PROVIDED BY HARDWARE SUPPLIER AND INSTALLED BY ALUMINUM SUPPLIER. ALUMINUM DOORS TO BE PREPARED BY ALUMINUM DOOR SUPPLIER IN ACCORDANCE WITH THE SCHEDULED HARDWARE.
P. ALL NEW HOLLOW METAL DOORS, FRAMES AND BORROWED LITE FRAMES TO BE PAINTED AS INDICATED ON THE A800 SERIES FINISH PLANS. SEE FINISH PLANS FOR WOOD DOOR FINISHES.
Q. PROVIDE SILENCERS ON ALL DOOR FRAMES.
R. SEE STRUCTURAL DRAWINGS FOR REQUIREMENTS FOR MASONRY AND STEEL LINTELS. PROVIDE STRUCTURAL STEEL LINTELS AT OPENINGS OPENINGS WHERE INDICATED ON THE STRUCTURAL STEEL DRAWINGS IN LIEU OF MASONRY LINTEL AS SHOWN IN THESE DETAILS.
S. VERIFY ALL EXISTING CONDITIONS AND DIMENSIONS IN THE FIELD PRIOR TO FABRICATION OF DOORS AND FRAMES. BRING DISCREPANCIES TO THE ATTENTION OF THE ARCHITECT.

DOOR NOTES

CSO
8831 Keystone Crossing, Indianapolis, IN 46240
317.848.7800 | csoinc.net

© 2018 CSO Architects, Inc. All Rights Reserved

PROJECT:

TOWN OF PLAINFIELD
MADE@ PLAINFIELD
Red Pride Drive, Plainfield, IN 46168

SCOPE DRAWINGS:
These drawings indicate the general scope of the project in terms of architectural design concept, the dimensions of the building, the major architectural elements and the type of structural, mechanical and electrical systems.
The drawings do not necessarily indicate or describe all work required for full performance and completion of the requirements of the Contract.
On the basis of the general scope indicated or described, the trade contractors shall furnish all items required for the proper execution and completion of the work.

REVISIONS:

1 BP #1 ADD. #1 01-30-20

ISSUE DATE	DRAWN BY	CHECKED BY
01/30/20	BSN	JRF

DRAWING TITLE:

DOOR AND FRAME SCHEDULE

CERTIFIED BY:

BID PACK 1 NOT FOR CONSTRUCTION

1

DRAWING NUMBER

A501

PROJECT NUMBER

19004

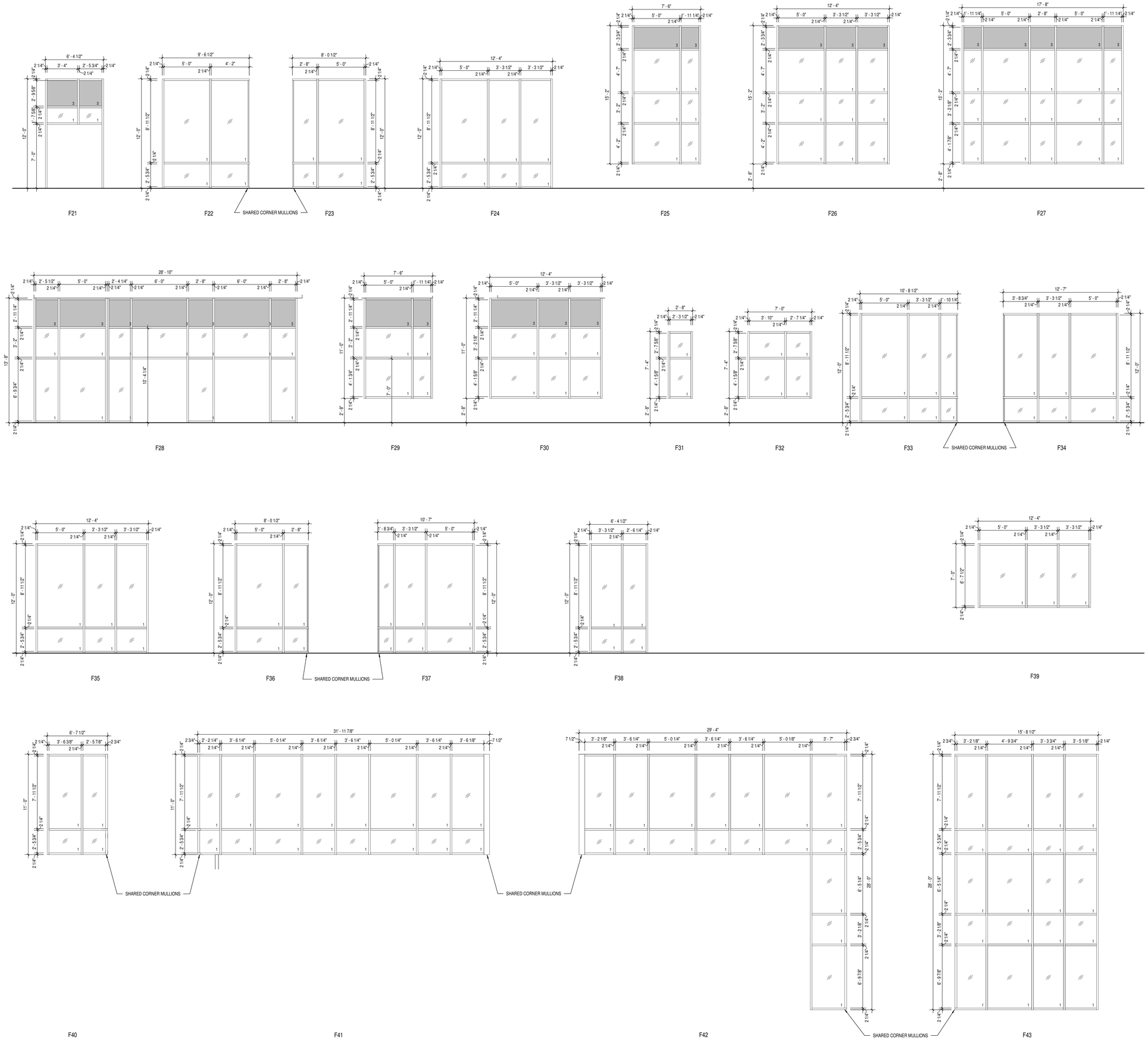

GLASS SCHEDULE

1. 1" THICK TEMPERED, LOW E, INSULATING GLAZING WITH 2 PANES 1/4" GLASS AND 1/2" AIRSPACE.
2. 1/4" CLEAR TEMPERED GLASS.
3. SPANDREL GLASS.
4. 5/16" CLEAR LAMINATED GLASS.

ABBREVIATIONS LEGEND

AL = ALUMINUM
AN = ANODIZED
BL = BORROWED LITE
GHM = GALVANNEALED HOLLOW METAL
GL = GLASS
HM = HOLLOW METAL
PT = PAINT
ST = STAIN
SS = STAINLESS STEEL
STL = STEEL
WD = WOOD
90M = 90 MINUTE ASSEMBLY RATING
* = SEE REMARKS COLUMN FOR NOTES

GENERAL DOOR NOTES

A. THESE GENERAL NOTES APPLY TO THE DOOR SCHEDULE.
B. DOOR AND FRAME NUMBERS CORRESPOND TO RESPECTIVE ROOM NUMBER. IN ROOMS WITH MULTIPLE OPENINGS, A NUMERICAL SUFFIX HAS BEEN ADDED TO DOOR NUMBERS.
C. VERTICAL FRAMING MEMBERS AT ALL DOOR FRAMES SHALL EXTEND TO STRUCTURE ABOVE.
D. UNDERCUT ALL DOORS AS REQUIRED BY FINAL FINISH.
E. PROVIDE CONTINUOUS SEALANT BETWEEN HOLLOW METAL FRAME PERIMETERS AND SURROUNDING WALL CONSTRUCTION.
F. PROVIDE CONTINUOUS SEALANT BETWEEN INTERIOR AND EXTERIOR WINDOW, CURTAINWALL AND STOREFRONT FRAME PERIMETERS AND SURROUNDING CONSTRUCTION UNLESS NOTED OTHERWISE.
G. GROUT FULL HOLLOW METAL FRAMES IN MASONRY CONSTRUCTION.
H. SPOT GROUT HOLLOW METAL FRAMES IN GYPSUM WALLS.
I. WHERE A FIRE RATING IS INDICATED ON THE DOOR SCHEDULE, HARDWARE AND DOOR ASSEMBLY COMPONENTS SHALL MEET THE REQUIREMENTS OF THAT LABEL.
J. WHERE AN STC RATING IS INDICATED ON THE DOOR SCHEDULE, HARDWARE AND DOOR ASSEMBLY COMPONENTS SHALL MEET THE REQUIREMENTS OF THAT LABEL.
K. INSTALL DOOR GLASS USING WET GLAZING METHOD.
L. ALL LINTELS ABOVE EXTERIOR OPENINGS SHALL BE GALVANIZED.
M. REFER TO SHEETS AXXX & AXXX FOR ADDITIONAL DOOR, FRAME AND BORROWED LITE ELEVATIONS.
N. COORDINATE THROAT OPENINGS WITH WALL WIDTH FOR ALL WRAP AROUND FRAMES.
O. SCHEDULED HARDWARE FOR ALUMINUM DOORS SHALL BE PROVIDED BY HARDWARE SUPPLIER AND INSTALLED BY ALUMINUM SUPPLIER. ALUMINUM DOORS TO BE PREPARED BY ALUMINUM DOOR SUPPLIER IN ACCORDANCE WITH THE SCHEDULED HARDWARE.
P. ALL NEW HOLLOW METAL DOORS, FRAMES AND BORROWED LITE FRAMES TO BE PAINTED AS INDICATED ON THE A800 SERIES FINISH PLANS. SEE FINISH PLANS FOR WOOD DOOR FINISHES.
Q. PROVIDE SILENCERS ON ALL DOOR FRAMES.
R. SEE STRUCTURAL DRAWINGS FOR REQUIREMENTS FOR MASONRY AND STEEL LINTELS. PROVIDE STRUCTURAL STEEL LINTELS AT OPENINGS OPENINGS WHERE INDICATED ON THE STRUCTURAL STEEL DRAWINGS IN LIEU OF MASONRY LINTEL AS SHOWN IN THESE DETAILS.
S. VERIFY ALL EXISTING CONDITIONS AND DIMENSIONS IN THE FIELD PRIOR TO FABRICATION OF DOORS AND FRAMES. BRING DISCREPANCIES TO THE ATTENTION OF THE ARCHITECT.

DOOR NOTES

CSO
8831 Keystone Crossing, Indianapolis, IN 46240
317.848.7600 | csoinc.net

© 2019 CSO Architects, Inc. All Rights Reserved

PROJECT:
TOWN OF PLAINFIELD
MADE@ PLAINFIELD
Red Pride Drive, Plainfield, IN 46168

SCOPE DRAWINGS:
These drawings indicate the general scope of the project in terms of architectural design concept, the dimensions of the building, the major architectural elements and the type of structural, mechanical and electrical systems. The contractors shall furnish all materials and do describe all work required for full performance and completion of the requirements of the Contract.
Unless the contract specifies general scope indicated or described, the trade contractors shall furnish all items required for the proper execution and completion of the work.

REVISIONS:
1 BP #1 ADD. #1 01-30-20

ISSUE DATE	DRAWN BY	CHECKED BY
01/30/20	BSN	JRF

DRAWING TITLE:
FRAME ELEVATIONS

CERTIFIED BY:
BID PACK 1
NOT FOR CONSTRUCTION

DRAWING NUMBER
A502

PROJECT NUMBER
19004