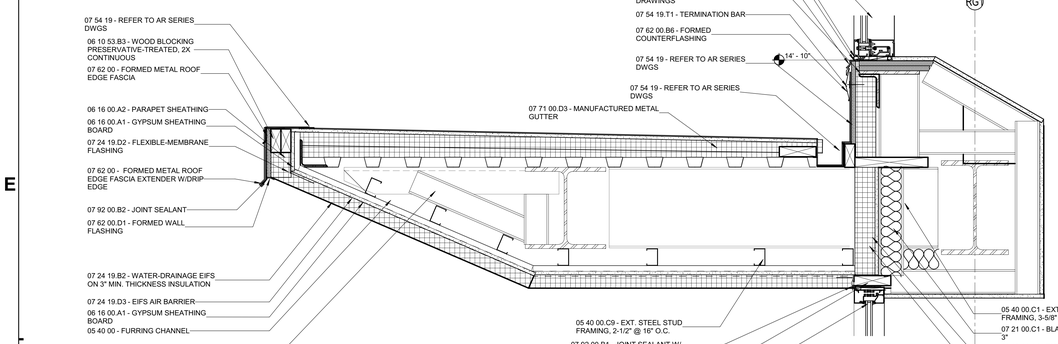

1E CANOPY DETAIL
1 1/2" = 1'-0"

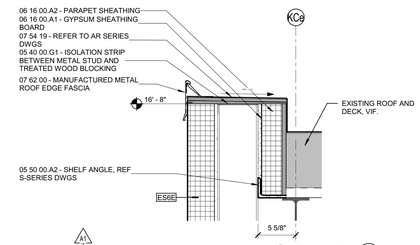

3F SECTION DETAIL - UNIT K 3 ROOF EDGE DETAIL
1 1/2" = 1'-0"

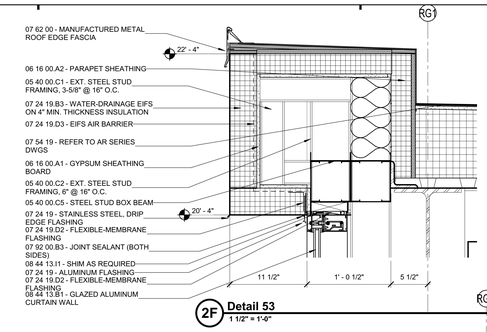

2F Detail 53
1 1/2" = 1'-0"

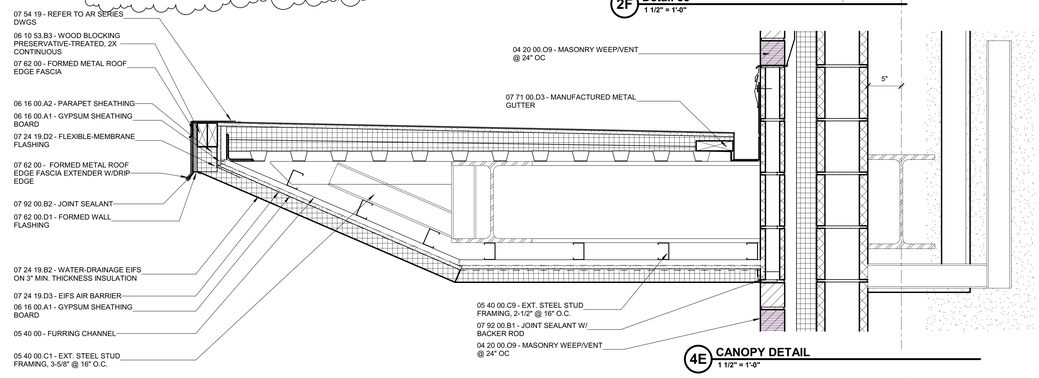

4E CANOPY DETAIL
1 1/2" = 1'-0"

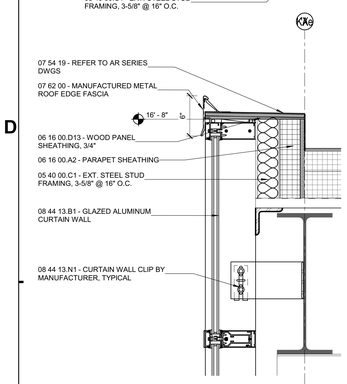

7C Detail 55
1 1/2" = 1'-0"

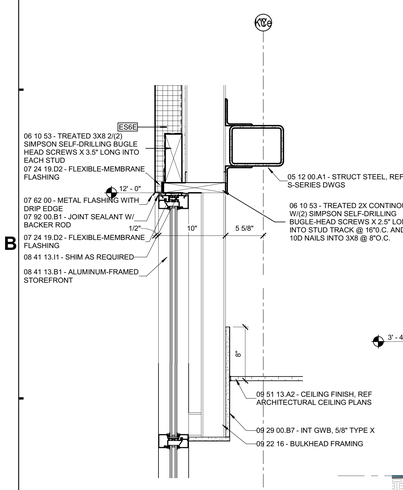

7B SECTION DETAIL - UNIT K 3 SF HEAD
1 1/2" = 1'-0"

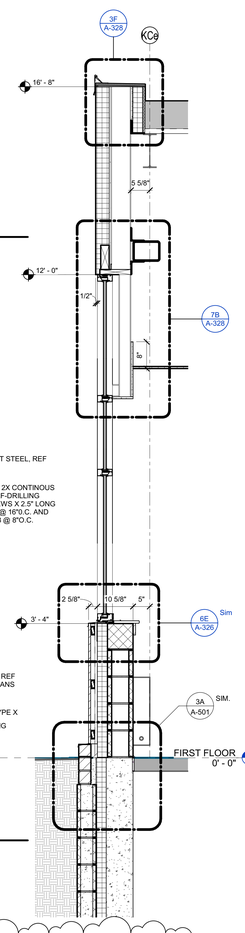

7A WALL SECTION - UNIT K 3
3/4" = 1'-0"

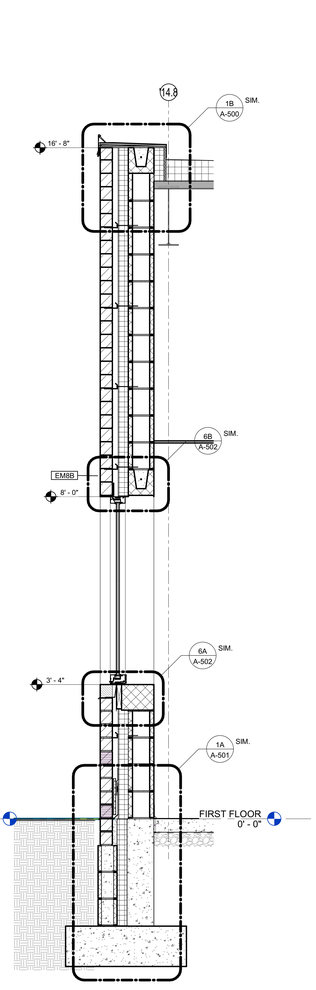

6A WALL SECTION - UNIT K
3/4" = 1'-0"

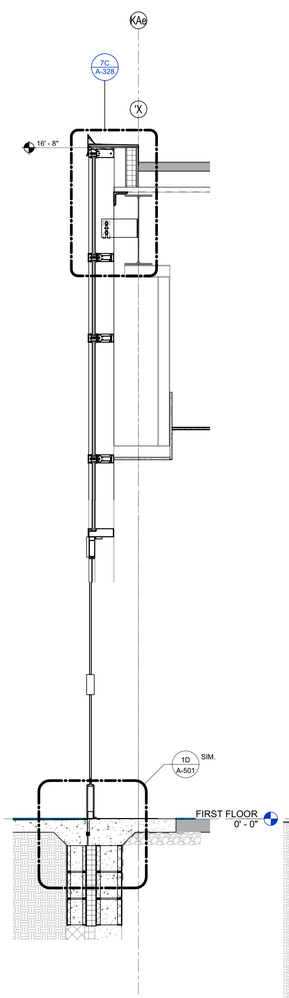

4A WALL SECTION - UNIT K2
3/4" = 1'-0"

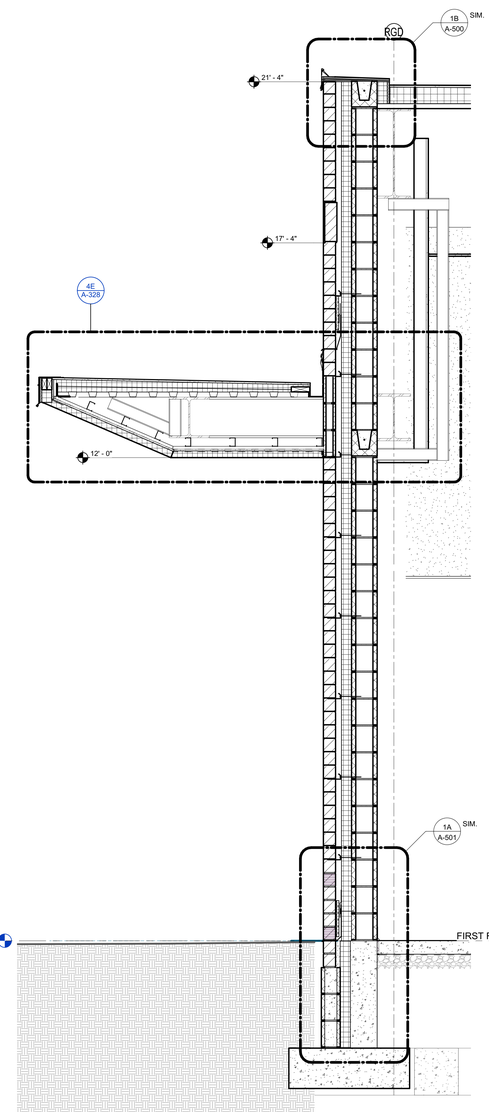

3A WALL SECTION @ UNIT K
3/4" = 1'-0"

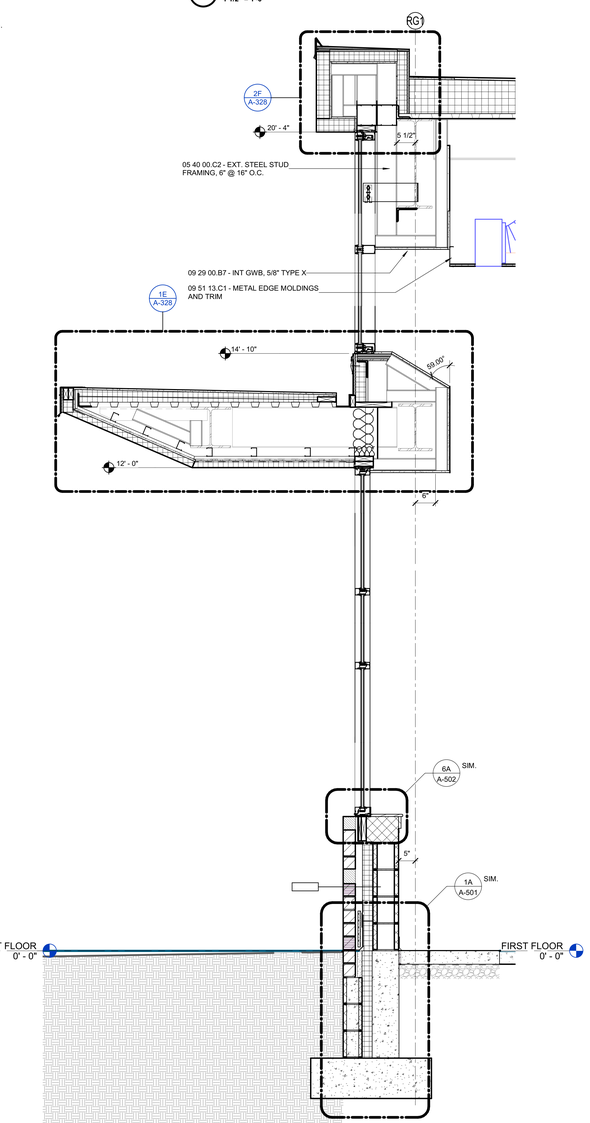

1A WALL SECTION - UNIT K 1
3/4" = 1'-0"

SCHMIDT ASSOCIATES
415 Massachusetts Avenue
Indianapolis, IN 46204
www.schmidt-arch.com

Project No. 2018-050.LCH
Project Date 05.05.2020
Produced SS HL

SARAH KATHLEEN HEMPSTEAD REGISTERED No. AR10400134 STATE OF INDIANA ARCHITECT

Sarah K Hempstead

These Drawings and Specifications, and all copies thereof are and shall remain the property and copyright of the Architect. They shall be used only with respect to this Project and are not to be used on any other Project or Work without prior written permission from the Architect.

#	Revision	Date
1	Addendum #1	05.14.2020

7300 E 56th St.
Lawrence, IN 46226

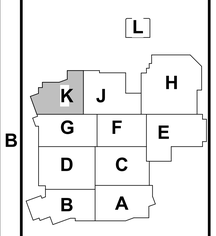

KEY PLAN

MSD OF LAWRENCE TOWNSHIP

ADDITIONS AND RENOVATIONS TO LAWRENCE CENTRAL HIGH SCHOOL

WALL SECTIONS

A-328