ADDENDUM
NO. 3

June 19, 2024

PORTER COUNTY HIGHWAY DEPARTMENT – CENTRAL FACILITY

TO: ALL BIDDERS OF RECORD

This Addendum forms a part of and modifies the Bidding Requirements, Contract Forms, Contract Conditions, the Specifications, and the Drawings dated May 24, 2024 by A & Z Engineering and MartinRiley. Acknowledge receipt of the Addendum in the space provided on the Bid Form. Failure to do so may subject the Bidder to disqualification.

This Addendum consists of Page ADD 3-1 through ADD 3-2, Revised Guideline Schedule, Addendum 3 from A & Z Engineering consisting of 1 page and 2 drawings, and Addendum 3 from MartinRiley dated June 19, 2024 and consisting of 3 pages, Specification Sections 00 01 10 - Table of Contents, 06 41 00 - Architectural Wood Casework, 07 41 13 - Metal Roof Panels, 07 42 13 - Metal Wall Panels, 08 36 13 - Sectional Doors, 13 34 19 - Metal Building Systems, and 22 Drawings.

A. <u>SPECIFICATION SECTION 01 12 00 - MULTIPLE CONTRACT SUMMARY</u>
Under 3.03 Bid Categories

A. <u>BID CATEGORY NO. 1 - GENERAL TRADES</u>

1. **Add:**

<u>Clarification No. 11:</u>
The **Bid Category No. 1 Contractor** is responsible for all work associated with the rammed aggregate piers. This contractor shall also coordinate the size, depth, and spacing of the piers with the foundation plans and loading schedule.

<u>Clarification No. 12:</u>
Reference Drawing Sheet A100; The **Bid Category No. 9 Contractor** will be responsible to provide all work associated with Notes 5 and 6. The **Bid Category No. 1 Contractor** will be responsible to provide all other work on this sheet.

I. BID CATEGORY NO. 9 - ELECTRICAL

1. **Add:**

Clarification No. 3:
Reference Drawing Sheet A100; The **Bid Category No. 9 Contractor** will be responsible to provide all work associated with Notes 5 and 6. The **Bid Category No. 1 Contractor** will be responsible to provide all other work on this sheet.

B. SPECIFICATION SECTION 01 32 00 - SCHEDULES AND REPORTS

1. **Replace:**

The Guideline with the attached revised Guideline Schedule.

Activity Name	Original Duration	Start	Finish
Porter County Highway Deptartment Central Facility	**370**	**May-29-2024 A**	**Nov-18-2025**
Project Administration	**370**	**May-29-2024 A**	**Nov-18-2025**
Bid Phase	20	May-29-2024 A	Jun-25-2024
Pre-Bid Meeting	1	Jun-05-2024 A	Jun-05-2024 A
Bids Due/Open Bids (Commissioners Meeting)	0		Jun-25-2024
Award Recommendation (Commissioners Meeting)	1	Jul-02-2024	Jul-02-2024
Notice to Proceed	0	Jul-03-2024	
Submittal Approvals	120	Jul-03-2024	Dec-17-2024
Start Construction	0	Jul-24-2024	
Saltbarn Completion	0		Nov-19-2024
Substantial Completion	0		Jul-01-2025
New Facility Turnover	0		Jul-01-2025
Punchlist Completion	21	Jul-02-2025	Jul-30-2025
Final Completion	0		Nov-18-2025
Sitework	**235**	**Jul-24-2024**	**Jun-17-2025**
Site Mobilization/Clearing/Demolition	15	Jul-24-2024	Aug-13-2024
Site Grading	10	Aug-14-2024	Aug-27-2024
Building Pad Prep and Proof Roll	5	Aug-28-2024	Sep-03-2024
Site Structures and Piping	15	Aug-28-2024	Sep-17-2024
Access Roads and Laydown Areas	5	Sep-18-2024	Sep-24-2024
Concrete Curbs and Walks	15	Apr-23-2025	May-13-2025
Asphalt Paving and Stripping	10	May-14-2025	May-27-2025
Granular Stone Fill	10	May-28-2025	Jun-10-2025
Topsoil and Seed	5	Jun-11-2025	Jun-17-2025
Saltbarn	**60**	**Aug-28-2024**	**Nov-19-2024**
Excavate and Pour Foundations	10	Aug-28-2024	Sep-10-2024
Backfill and Compacted Granular Fill	5	Sep-11-2024	Sep-17-2024
Pipe Bollards	5	Sep-18-2024	Sep-24-2024
Asphalt Paving	5	Sep-25-2024	Oct-01-2024
Set Pre-Engineered Metal Building Structure	10	Oct-23-2024	Nov-05-2024
Door, Frame and Hardware	3	Nov-06-2024	Nov-08-2024
Overhead Coiling Door	3	Nov-06-2024	Nov-08-2024
Standing Seam Metal Roof	10	Nov-06-2024	Nov-19-2024

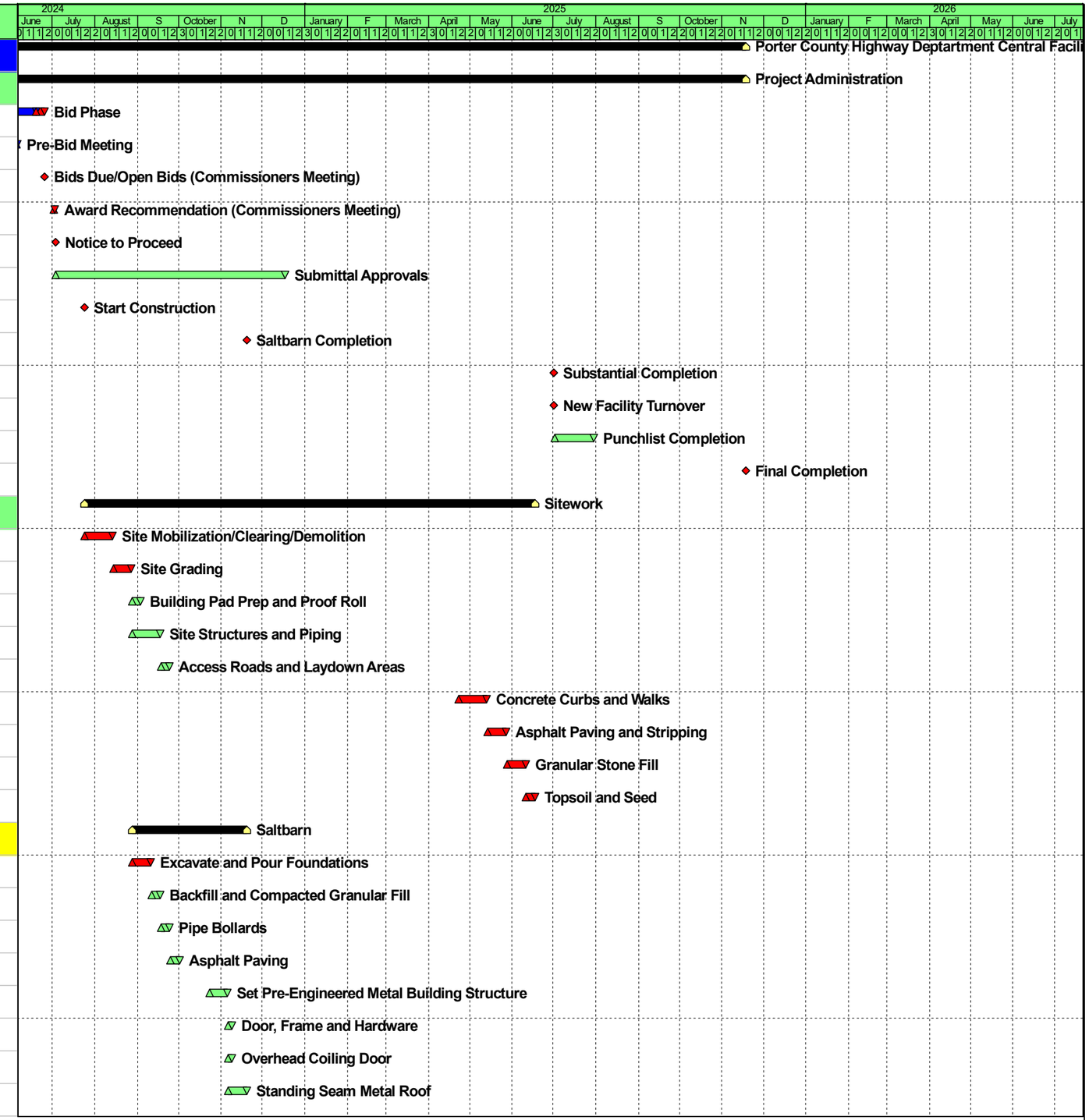

Actual Work
Remaining Work
Critical Remaining Work
Milestone
Summary

223111 Porter County Highway Deptartment Central Facility
Guideline Schedule (ADD 3) Jun-19-2024

SKILLMAN

Activity Name	Original Duration	Start	Finish
Building Core and Shell	285	Sep-11-2024	Oct-14-2025
Highway Department	170	Sep-11-2024	May-06-2025
Admin Offices	110	Sep-11-2024	Feb-11-2025
Excavate, set Aggregate Piers and pour Footings/Foundations	20	Sep-11-2024	Oct-08-2024
Underground Plumbing	10	Oct-09-2024	Oct-22-2024
Foundation Rigid Insulation	5	Oct-09-2024	Oct-15-2024
Backfill and Grade Granular Fill	5	Oct-23-2024	Oct-29-2024
Underground Electrical	5	Oct-30-2024	Nov-05-2024
CMU Exterior Structural Walls	10	Oct-30-2024	Nov-12-2024
Structural Steel Columns, Joists and Decking	15	Nov-13-2024	Dec-03-2024
Roof Drains	3	Dec-04-2024	Dec-06-2024
Mechanical Curbs	3	Dec-04-2024	Dec-06-2024
Roofing	10	Dec-04-2024	Dec-17-2024
Concrete Slab on Grade	5	Dec-18-2024	Dec-24-2024
Roofing Details	15	Dec-18-2024	Jan-07-2025
Set Mechanical Equipment	5	Dec-18-2024	Dec-24-2024
Exterior Metal Framing and Sheathing	10	Dec-25-2024	Jan-07-2025
Exterior Insulation, Splitface, Cast Stone and Brick	15	Jan-08-2025	Jan-28-2025
Canopies	10	Jan-08-2025	Jan-21-2025
Cast Stone Panels	5	Jan-22-2025	Jan-28-2025
Cast Stone Parapet Coping	5	Jan-29-2025	Feb-04-2025
Exterior Windows, Storefronts and Curtain Walls	10	Jan-29-2025	Feb-11-2025
Exterior Signage	3	Jan-29-2025	Jan-31-2025
Truck Maintenance/Sign Shop/Wash Bay	110	Oct-09-2024	Mar-11-2025
Excavate, set Aggregate Piers and pour Footings/Foundations	30	Oct-09-2024	Nov-19-2024
Underground Plumbing	10	Nov-20-2024	Dec-03-2024
Foundation Rigid Insulation	5	Nov-20-2024	Nov-26-2024
Backfill and Grade Granular Fill	5	Dec-04-2024	Dec-10-2024
CMU Exterior Structural Walls	10	Dec-11-2024	Dec-24-2024
Structural Steel Columns, Joists and Decking	10	Dec-25-2024	Jan-07-2025
Pre-Engineered Metal Building System, Bridge Crane Structure	25	Dec-25-2024	Jan-28-2025
Roof Drains	3	Jan-08-2025	Jan-10-2025
Mechanical Curbs	3	Jan-08-2025	Jan-10-2025

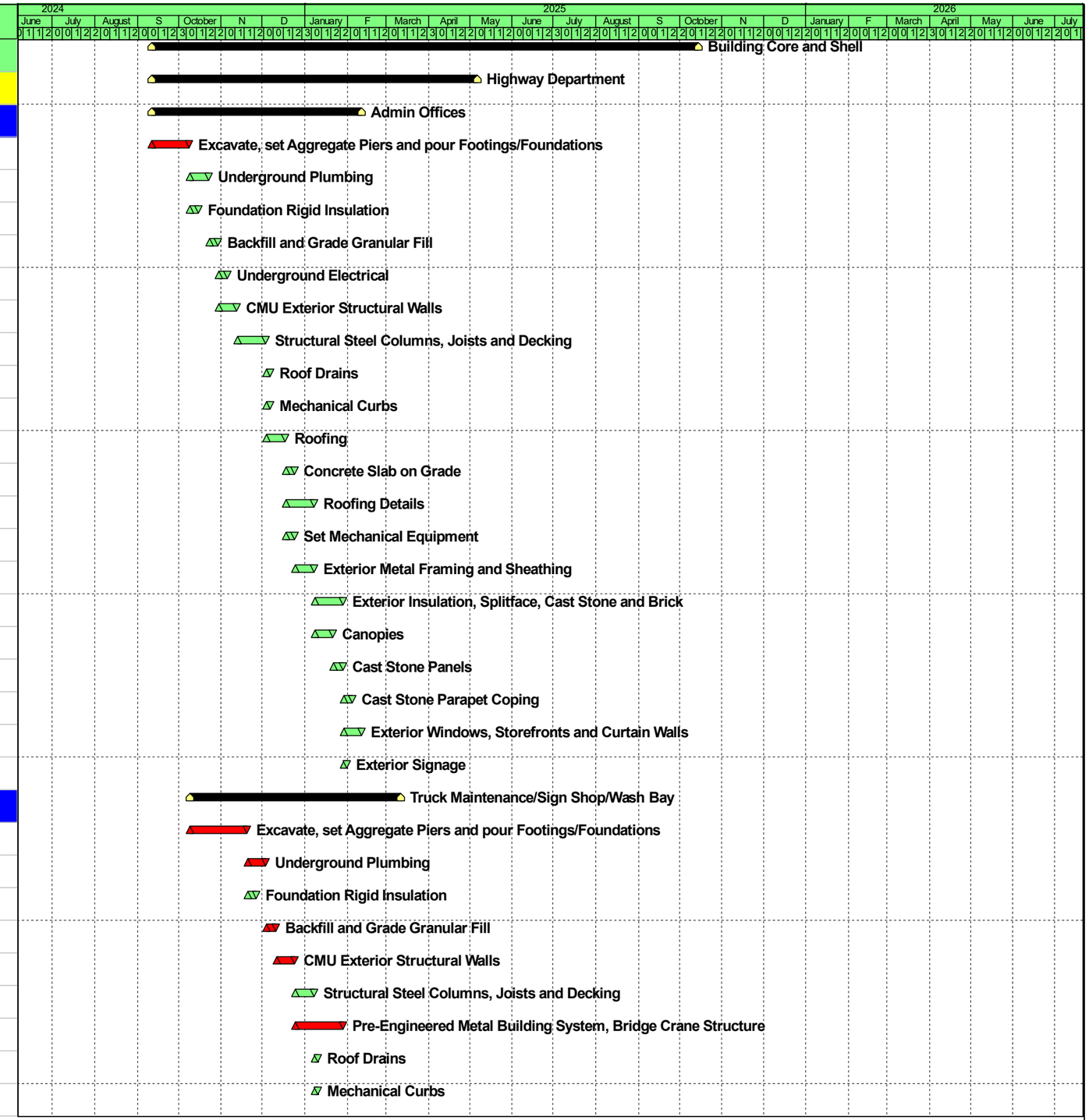

Actual Work
Remaining Work
Critical Remaining Work
Milestone
Summary

223111 Porter County Highway Deptartment Central Facility
Guideline Schedule (ADD 3) Jun-19-2024

SKILLMAN

Activity Name	Original Duration	Start	Finish
Slab on Deck	5	Jan-08-2025	Jan-14-2025
Underground Electrical	10	Jan-29-2025	Feb-11-2025
Roofing Details	15	Jan-29-2025	Feb-18-2025
Trench Drains	10	Jan-29-2025	Feb-11-2025
Pipe Bollards	5	Jan-29-2025	Feb-04-2025
Concrete Slab on Grade	10	Feb-12-2025	Feb-25-2025
Exterior Mechanical Equipment	5	Feb-26-2025	Mar-04-2025
Exterior Man Doors and Sectional Doors	10	Feb-26-2025	Mar-11-2025
Exterior Signage	3	Feb-26-2025	Feb-28-2025
Truck Parking	**120**	**Nov-20-2024**	**May-06-2025**
Excavate, set Aggregate Piers and pour Footings/Foundations	40	Nov-20-2024	Jan-14-2025
Underground Plumbing	10	Jan-15-2025	Jan-28-2025
Foundation Rigid Insulation	5	Jan-15-2025	Jan-21-2025
Backfill and Grade Granular Fill	5	Jan-29-2025	Feb-04-2025
CMU Exterior Structural Walls	10	Feb-05-2025	Feb-18-2025
Structural Steel Columns, Joists and Decking	10	Feb-19-2025	Mar-04-2025
Pre-Engineered Metal Building System	25	Feb-19-2025	Mar-25-2025
Roof Drains	3	Mar-05-2025	Mar-07-2025
Mechanical Curbs	3	Mar-05-2025	Mar-07-2025
Slab on Deck	5	Mar-05-2025	Mar-11-2025
Underground Electrical	10	Mar-26-2025	Apr-08-2025
Roofing Details	15	Mar-26-2025	Apr-15-2025
Trench Drains	10	Mar-26-2025	Apr-08-2025
Pipe Bollards	5	Mar-26-2025	Apr-01-2025
Concrete Slab on Grade	10	Apr-09-2025	Apr-22-2025
Exterior Mechanical Equipment	5	Apr-23-2025	Apr-29-2025
Exterior Man Doors and Sectional Doors	10	Apr-23-2025	May-06-2025
Exterior Signage	3	Apr-23-2025	Apr-25-2025
Cold Storage (Alternate)	**75**	**Jul-02-2025**	**Oct-14-2025**
Building Demolition (Owner)	20	Jul-02-2025	Jul-29-2025
Excavate, set Aggregate Piers and pour Footings/Foundations	15	Jul-30-2025	Aug-19-2025
Underground Plumbing	5	Aug-20-2025	Aug-26-2025
Foundation Rigid Insulation	5	Aug-20-2025	Aug-26-2025

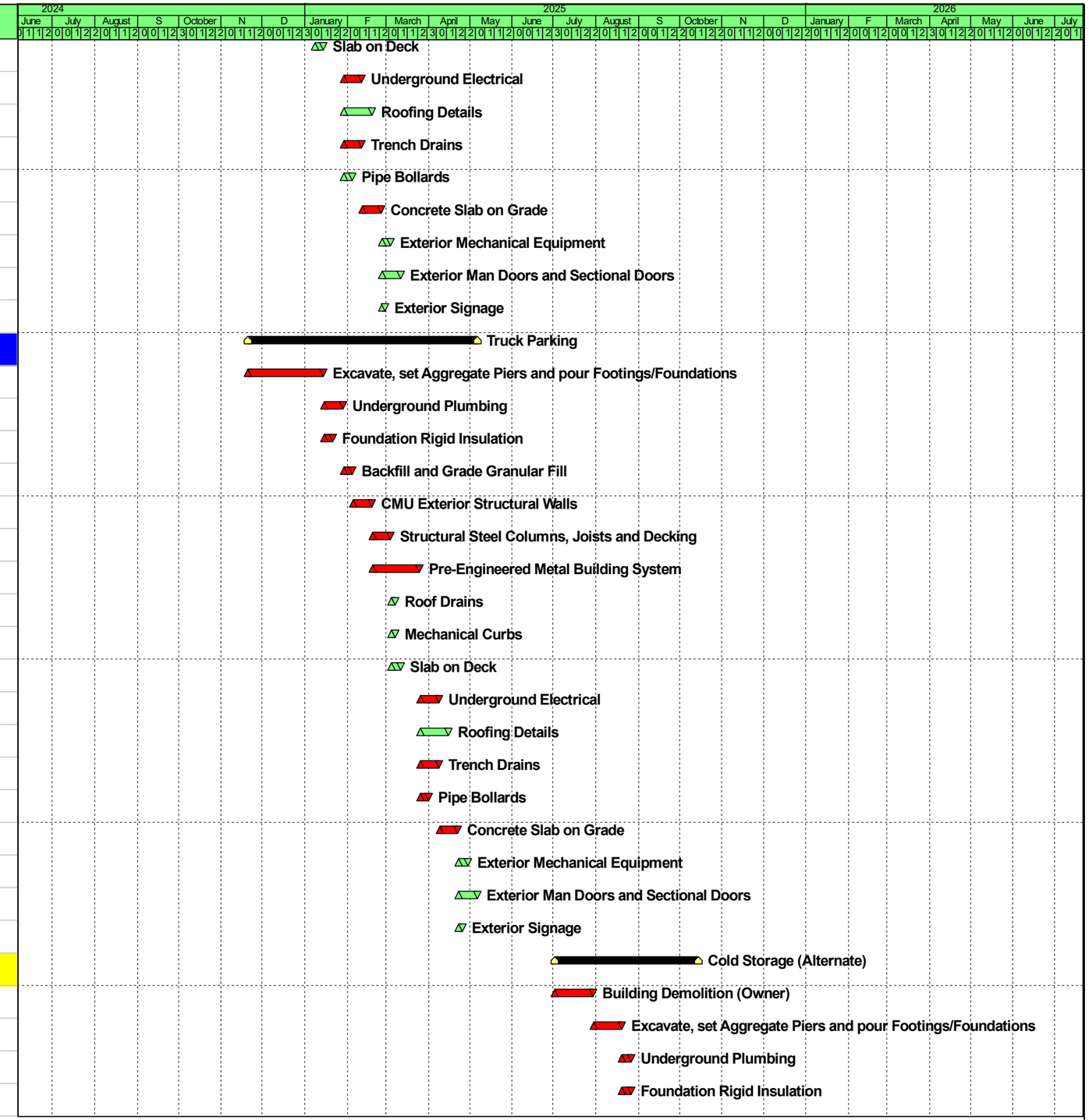

Actual Work
Remaining Work
Critical Remaining Work
Milestone
Summary

223111 Porter County Highway Deptartment Central Facility
Guideline Schedule (ADD 3) Jun-19-2024

Activity Name	Original Duration	Start	Finish
Backfill and Grade Granular Fill	5	Aug-27-2025	Sep-02-2025
Roof Drains	3	Sep-03-2025	Sep-05-2025
Pre-Engineered Metal Building System	15	Sep-03-2025	Sep-23-2025
Underground Electrical	5	Sep-24-2025	Sep-30-2025
Roofing Details	10	Sep-24-2025	Oct-07-2025
Trench Drains	5	Sep-24-2025	Sep-30-2025
Pipe Bollards	5	Sep-24-2025	Sep-30-2025
Concrete Slab on Grade	5	Oct-01-2025	Oct-07-2025
Exterior Man Doors and Sectional Doors	5	Oct-08-2025	Oct-14-2025
Exterior Signage	3	Oct-08-2025	Oct-10-2025
Interior Buildout	**235**	**Dec-25-2024**	**Nov-18-2025**
Highway Department	**135**	**Dec-25-2024**	**Jul-01-2025**
Admin Offices	**95**	**Dec-25-2024**	**May-06-2025**
Ductwork	10	Dec-25-2024	Jan-07-2025
Plumbing Piping	10	Jan-08-2025	Jan-21-2025
Mechanical Piping	10	Jan-08-2025	Jan-21-2025
Fire Protection Piping	10	Jan-08-2025	Jan-21-2025
Electrical and Technology Rough-ins	10	Jan-22-2025	Feb-04-2025
Interior Metal Stud Framing	10	Jan-22-2025	Feb-04-2025
Door Frames	10	Jan-22-2025	Feb-04-2025
Drywall and Tape	15	Feb-05-2025	Feb-25-2025
Painting	10	Feb-26-2025	Mar-11-2025
Acoustical Ceilings	10	Mar-12-2025	Mar-25-2025
Casework	5	Mar-26-2025	Apr-01-2025
Light Fixtures	10	Mar-26-2025	Apr-08-2025
Fire Protection Heads	10	Mar-26-2025	Apr-08-2025
Mechanical Diffusers and Registers	10	Mar-26-2025	Apr-08-2025
Plumbing Fixtures	10	Apr-02-2025	Apr-15-2025
Carpet and LVT	10	Apr-16-2025	Apr-29-2025
Toilet Partitions	2	Apr-16-2025	Apr-17-2025
Toilet Accessories	2	Apr-18-2025	Apr-21-2025
Epoxy and Sealed Floors	5	Apr-22-2025	Apr-28-2025
Doors and Hardware	5	Apr-30-2025	May-06-2025

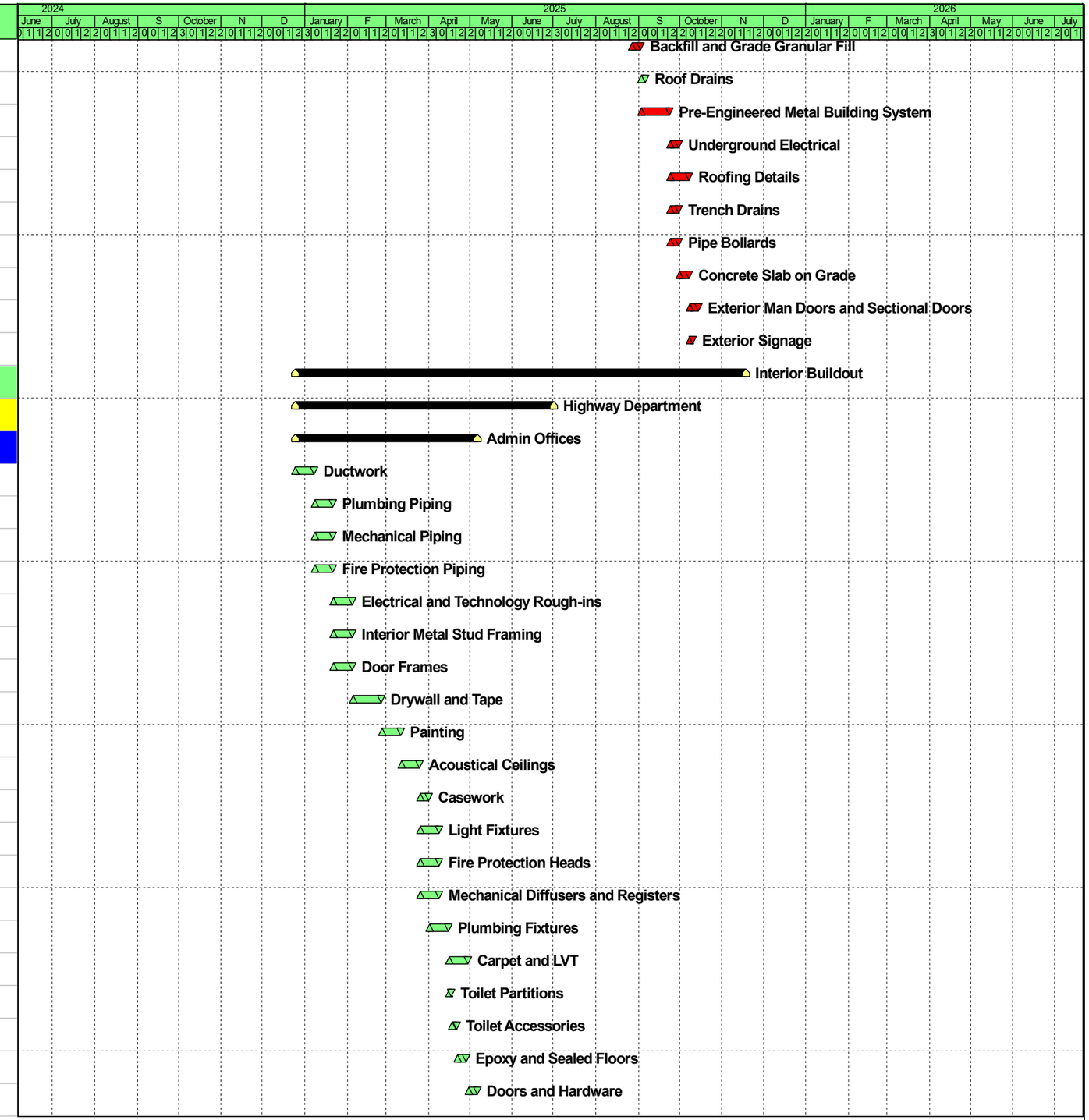

Actual Work
Remaining Work
Critical Remaining Work
Milestone
Summary

223111 Porter County Highway Deptartment Central Facility
Guideline Schedule (ADD 3) Jun-19-2024

Activity Name	Original Duration	Start	Finish
Truck Maintenance/Sign Shop/Wash Bay	**55**	**Feb-26-2025**	**May-13-2025**
Ductwork and Exhaust Systems	10	Feb-26-2025	Mar-11-2025
Mezzanine Railing and Stairs	10	Feb-26-2025	Mar-11-2025
Painting	10	Mar-12-2025	Mar-25-2025
Mechanical Piping	15	Mar-26-2025	Apr-15-2025
Plumbing Piping	15	Mar-26-2025	Apr-15-2025
Fire Spinkler Piping, Heads and Risers	15	Mar-26-2025	Apr-15-2025
Electrical Distribution Equipment	15	Mar-26-2025	Apr-15-2025
Light Fixtures	10	Apr-16-2025	Apr-29-2025
Plumbing Fixtures	10	Apr-16-2025	Apr-29-2025
Mechanical Equipment	10	Apr-16-2025	Apr-29-2025
Fluid Systems and Tanks	10	Apr-16-2025	Apr-29-2025
Sealed Flooring	10	Apr-30-2025	May-13-2025
Truck Parking	**50**	**Apr-23-2025**	**Jul-01-2025**
Ductwork and Exhaust Systems	10	Apr-23-2025	May-06-2025
Mezzanine Railing and Stairs	10	Apr-23-2025	May-06-2025
Painting	10	May-07-2025	May-20-2025
Mechanical Piping	10	May-21-2025	Jun-03-2025
Plumbing Piping	10	May-21-2025	Jun-03-2025
Fire Spinkler Piping, Heads and Risers	10	May-21-2025	Jun-03-2025
Electrical Distribution Equipment	10	May-21-2025	Jun-03-2025
Light Fixtures	10	Jun-04-2025	Jun-17-2025
Plumbing Fixtures	10	Jun-04-2025	Jun-17-2025
Mechanical Equipment	10	Jun-04-2025	Jun-17-2025
Sealed Flooring	10	Jun-18-2025	Jul-01-2025
Cold Storage (Alternate)	**30**	**Oct-08-2025**	**Nov-18-2025**
Painting	10	Oct-08-2025	Oct-21-2025
Electrical Distribution Equipment	5	Oct-22-2025	Oct-28-2025
Light Fixtures	10	Oct-29-2025	Nov-11-2025
Sealed Flooring	5	Nov-12-2025	Nov-18-2025

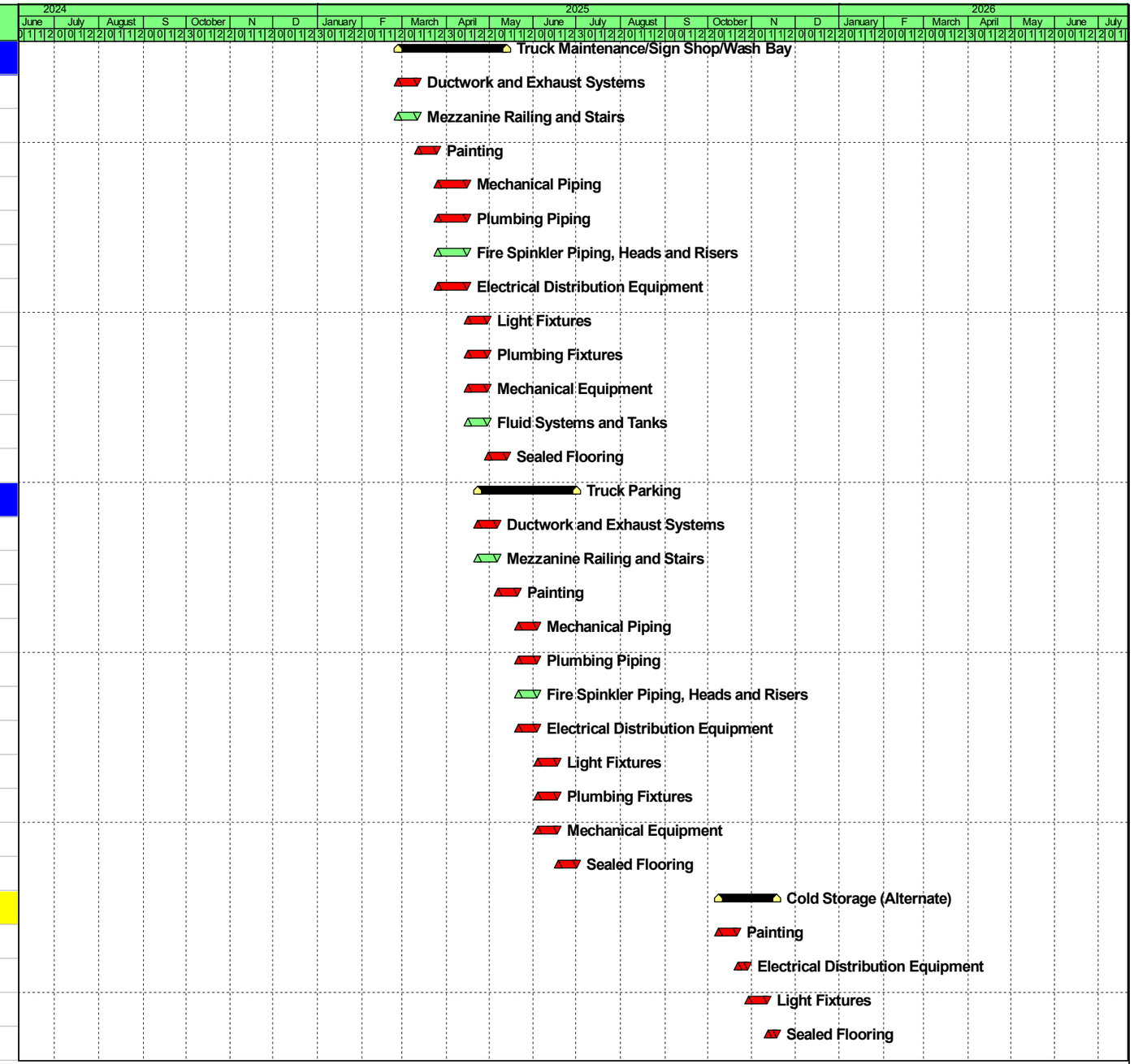

- Actual Work
- Remaining Work
- Critical Remaining Work
- Milestone
- Summary

223111 Porter County Highway Deptartment Central Facility
Guideline Schedule (ADD 3) Jun-19-2024

1. Sheet C105 – Site Plan
    a. Revised size and location of concrete pad for electrical transformer and generator.
    b. Added bollards around concrete pad.

2. Sheet C109 – Storm Sewer Utility Plan
    a. Added eight 4" conduits (two for electric service & two for gas service) near proposed concrete pad for electric transformer and generator.

LEGEND

C	PCCP FOR APPROACHES, 9 IN. ON 12 IN. COMPACTED AGGREGATE NO. 53, ON GEOGRID BX1300, ON SUBGRADE COMPACTED TO 95% DENSITY	W	CONCRETE TRUCK WASHOUT
CW	CURBFACE SIDEWALK, CONCRETE ON 2 IN. COMPACTED AGGREGATE NO. 53	10	8" PIPE BOLLARD
D	CONCRETE FUEL CONTAINMENT ISLAND	11	FENCE, 6'
F	SIDEWALK, CONCRETE, 4 IN. ON 2 IN. COMPACTED AGGREGATE NO. 53	29	MULCHED SEEDING, TYPE U, ON TOPSOIL, 2 IN.
K	HMA FOR MAINLINE, TYPE B 165 #/SYS HMA SURFACE, ON 275 #/SYS HMA BASE, ON 12 IN. COMPACTED AGGREGATE NO. 53, ON GEOGRID BX1300, ON SUBGRADE COMPACTED TO 95% DENSITY	30	LINE, THERMOPLASTIC, WHITE, 4"
			12 IN. COMPACTED AGGREGATE FOR SURFACE, NO. 53

HMA FOR MAINLINE GENERAL NOTES:
1. HMA MATERIALS TO BE PROCURED AND INSTALLED BY OTHERS
2. CONTRACT IS RESPONSIBLE FOR PLACEMENT OF COMPACTED AGGREGATE, PLACEMENT OF GEOGRID BX1300, AND PREPARATION OF SUBGRADE.

AD-1

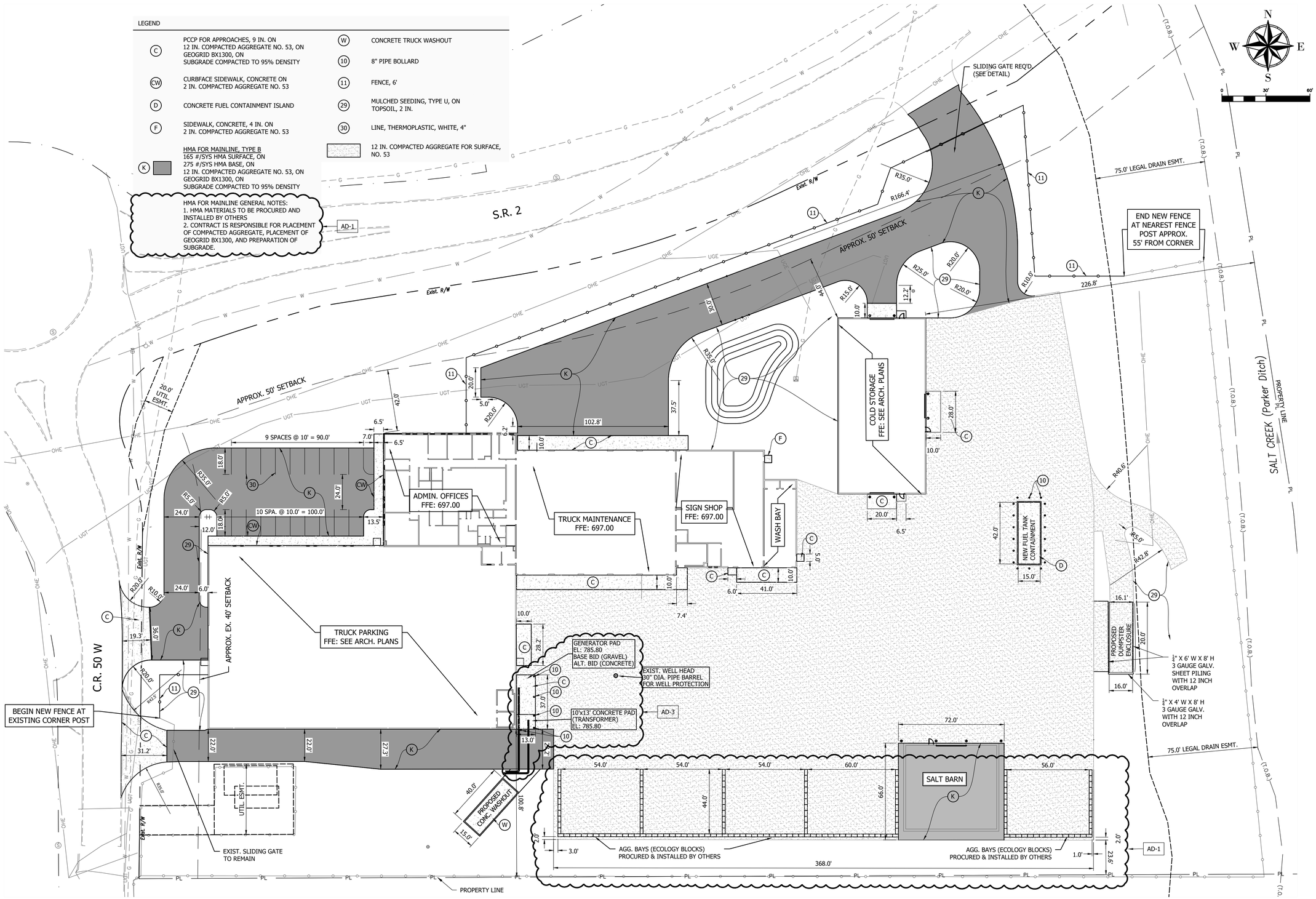

NOTE: SEE ARCHITECTURAL PLANS FOR BUILDING DIMENSIONS.

New Construction Work for :

Porter County Highway Department - Central Facility

1955 IN-2
Valparaiso, IN 46383

PORTER COUNTY Indiana

A&Z ENGINEERING LLC
1220 Ruston Pass
Fort Wayne, IN 46825
260.485.7077
www.az-engineering.net

WARREN J. ZMICK REGISTERED No. 910335 STATE OF INDIANA PROFESSIONAL ENGINEER

BY: Warren J. Zmick
DATE: 5-24-2024

REVISION:	DATE:
AD-1 - ADDENDUM #1	06/04/24
AD-3 - ADDENDUM #3	06/19/24

DRAWN BY:	PDH	REVIEWED BY:	LSG
COMMISSION NUMBER:	F22146	DATE:	2024-05-24

C105

SITE PLAN

S:\2023 Projects\23-1529 Porter County Valpo Site-Design\CAD\231529 SITE PLAN.dwg----5/19/2024----#######----Paulkeward

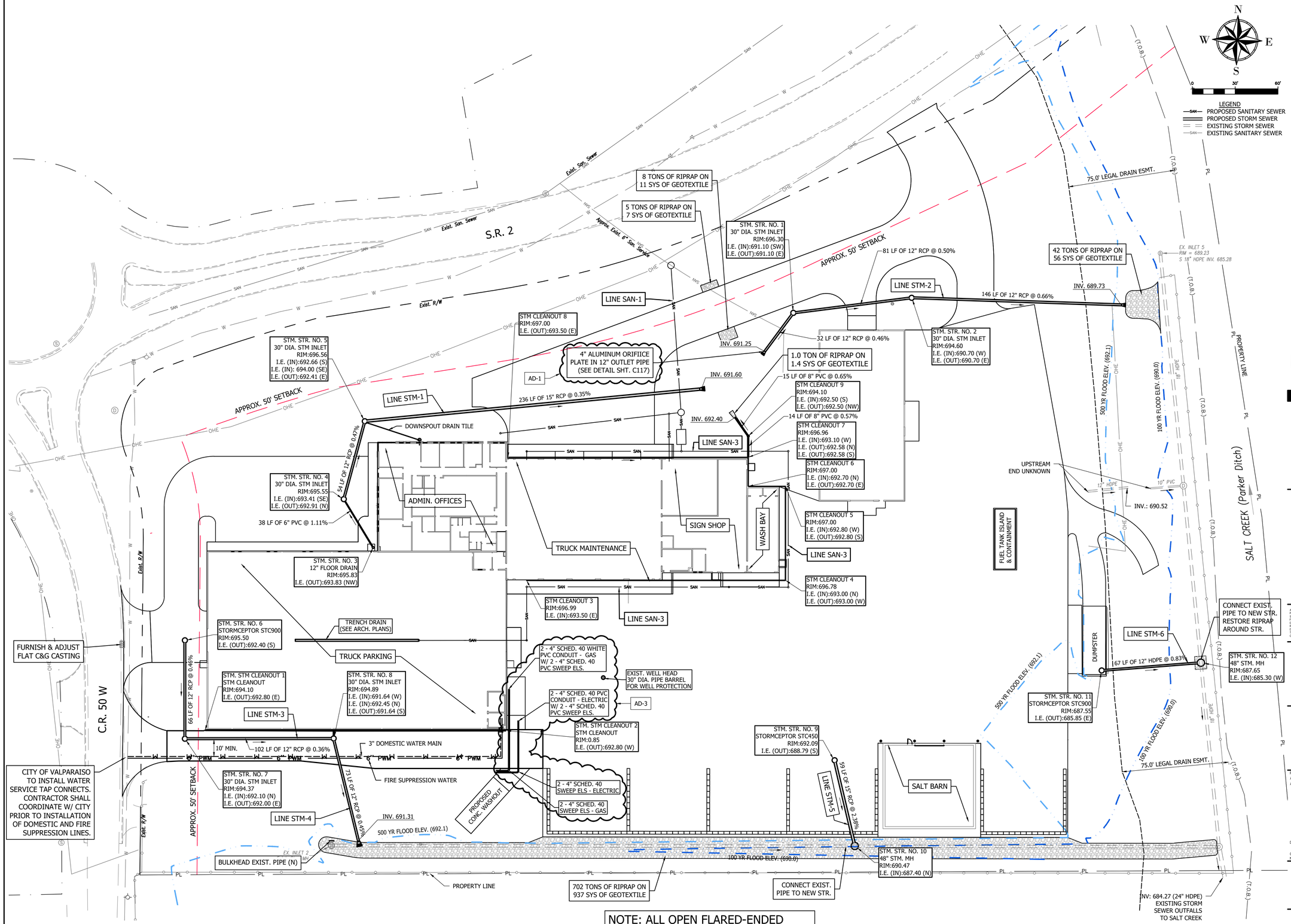

NOTE: ALL OPEN FLARED-ENDED PIPES SHALL HAVE A DEBRIS/ANIMAL GUARD.

S:\2023 Projects\23-1520 Porter County Velpo Site-Design\CAD\231520 UTIL PLAN.dwg——6/19/2024——1" = 30'——Paulkoward

New Construction Work for :

Porter County Highway Department - Central Facility

1955 IN-2
Valparaiso, IN 46383

PORTER COUNTY Indiana

A&Z ENGINEERING LLC
1220 Ruston Pass
Fort Wayne, IN 46825
260.485.7077
www.az-engineering.net

WARREN J. ZWICK REGISTERED No. 910335 STATE OF INDIANA PROFESSIONAL ENGINEER

BY: Warren J. Zwick
DATE: 5-24-2024

REVISION:	DATE:
AD-1 - ADDENDUM #1	06/04/24
AD-3 - ADDENDUM #3	06/19/24

DRAWN BY:	PDH	REVIEWED BY:	LSG
COMMISSION NUMBER:	F22146	DATE:	2024-05-24

C109

STORM SEWER UTILITY PLAN

ADDENDUM THREE

Porter County Highway Department
1955 IN-2
Valparaiso, IN 46385

MARTINRILEY architects/engineers
221 West Baker Street
Fort Wayne, Indiana 46802
260-422-7994

Commission No.: F22146

Addendum Date: 19 June 2024

Conditions: The following clarifications, amendments, additions, deletions, revisions and modifications are a part of the contract documents and change the original documents only in the manner and to the extent stated.

Copies of the Addendum shall be bound with all contract sets of drawings and specifications.

CLARIFICATIONS:

Purlins or open web steel joists can be utilized for PEMB buildings at bidders / manufacturers discretion.

Pressure washer remote station, soap solenoid switch, lances and hose reels as indicated in Note 1 of schedule are to be pressure washer manufacture standard.

CHANGES TO THE SPECIFICATIONS:

Section 00 0110 Table of Contents **REPACE** section in volume.

Section 06 4100 Architectural Wood Casework, **DELETE** Paragraphs 1.04.E and 1.05 including sub-paragraphs.

Section 07 4113 Metal Roof Panels, **DELETE** Paragraph 2.01.D.3 including sub-paragraphs referencing FM Global.

Section 07 4213 Metal Wall Panels, **MODIFY** Paragraph 2.01.A to read, “Design is based on Butler Manufacturing wall panels”.

Section 08 3613 Sectional Doors, MODIFY Paragraph 2.03.A.1 to indicate, “20 gauge, 0.0359 inch” outer sheet thickness.

Section 13 3419 Metal Building Systems, **MODIFY** Paragraph 2.03.A.1 to read, “Coordinate with equipment requirements for increased collateral loads, point loads, and movement”.

Section 13 3419 Metal Building Systems, **ADD** Paragraph 2.03.A.2 to read, “Collateral Load: 10 psf”.

CHANGES TO DRAWINGS:

Sheet S001 Structural Specifications **MODIFY** Soil Notes #4 to indicate “Owner” in first sentence. Add sentence to read, “Aggregate pier testing is by Contractor.” before last sentence. Refer to sheet attached hereto.

Sheet S203 Framing Plan **ADD** (4) parapet braces as indicated on Office Roof framing plan.

Sheet S204 Framing Plan **ADD** 41’-8” dimension between centerlines of each crane rail.

Sheet S403 Foundation Details **MODIFY** change footing reference in Details 8 & 9 to “B/ GD BEAM”.

Sheet S501 Structural Details **MODIFY** note on Detail 6. Crane rail to be 40#.

Sheet S502 Structural Details **ADD** Detail 13 Parapet Support to sheet.

Sheet A104 Enlarged Plans **ADD** note to read, “Pour stop to extend to 4” above slab”. Locate note at all mezzanine locations and PEMB walls. Refer to sheet attached hereto.

Sheet A105 Enlarged Plans **ADD** note to read, “Pour stop to extend to 4” above slab”. Locate note at all mezzanine locations and PEMB walls. Refer to sheet attached hereto.

Sheet A120 Floor Plan – Salt Barn **MODIFY** notes on plan 2. Notes to reference prefabricated arched structure and stretched membrane roofing. Refer to sheet attached hereto.

Sheet A303 Reflected Ceiling Plan – Central Facility **REMOVE** ceiling in RR 133 to match finish schedule reference.

Sheet A303 Reflected Ceiling Plan – Central Facility **ADD** ceiling in Office 135 to match finish schedule reference.

Sheet A402 Building Sections **ADD** crane bridge and dimension. Dimension to indicate “20’-0” CLR MINIMUM” to bottom of hoist.

Sheet A410 Wall Sections – Central Facility **MODIFY** framing references and add, refer to sheet attached hereto.

Sheet A411 Wall Sections – Central Facility **MODIFY** framing references, refer to sheet attached hereto.

Sheet A502 Details **REMOVE** references to framing gauges.

Sheet A504 Details **ADD** Detail 6, “Column Closure Plate Detail”, to sheet. Detail to provide more information for Note 19 of A104 and Note 11 of A105.

Sheet A510 Door Schedule and Details **ADD** windows to overhead door.

Sheet A520 Window Schedule and Details **REMOVE** references to framing gauges.

Sheet A521 Window Details **REMOVE** references to framing gauges.

Sheet R201 Roof Plan – Central Facility **ADD** roof penetration locations and note at tall parapet wall location.

Sheet R202 Roof Details **ADD** parapet support information and notes to Detail 3.

Sheet E303 Electrical Lighting Plan **MODIFY** light to L03E in RR133.

Sheet E501 Electrical Schedules and Details **ADD** Schedule and notes related to low voltage door access, cameras, and related software.

ATTACHMENTS:

S001	S203
S204	S501
S502	A104
A105	A120
A303	A402
A410	A411
A502	A504
A510	A520
A521	R101
R202	E303
E501	S403

Section 00 0110
Section 06 4100
Section 07 4113
Section 07 4213
Section 08 3613
Section 13 3419

END OF ADDENDUM NUMBER THREE

SECTION 00 0110
TABLE OF CONTENTS

END OF SECTION

SECTION 06 4100
ARCHITECTURAL WOOD CASEWORK

PART 1 GENERAL

1.01 SECTION INCLUDES

A. Plastic Laminate Cabinets

B. Hardware.

1.02 RELATED REQUIREMENTS

A. Section 06 1000 - Rough Carpentry: Support framing, grounds, and concealed blocking.

1.03 REFERENCE STANDARDS

A. AWI (QCP) - Quality Certification Program; Current Edition.

B. AWMAC/WI (NAAWS) - North American Architectural Woodwork Standards; 2021, with Errata.

C. BHMA A156.9 - Cabinet Hardware; 2020.

D. HPVA HP-1 - American National Standard for Hardwood and Decorative Plywood; 2020.

E. NEMA LD 3 - High-Pressure Decorative Laminates; 2005.

1.04 SUBMITTALS

A. See Skillman 01 3300 - Submital Procedure, for submittal procedures.

B. Shop Drawings: Indicate materials, component profiles, fastening methods, jointing details, and accessories.
   1. Provide the information required by AWI or AWMAC (NAAWS).
   2. Include certification program label.

C. Product Data: Provide data for hardware accessories.

D. Samples: Provide plastic laminate samples for each type, color, pattern, and surface finish,

1.05 DELIVERY, STORAGE, AND HANDLING

A. Protect units from moisture damage.

1.06 FIELD CONDITIONS

A. During and after installation of custom cabinets, maintain temperature and humidity conditions in building spaces at same levels planned for occupancy.

PART 2 PRODUCTS

2.01 CABINETS

A. Quality Standard: Custom Grade, in accordance with AWI/AWMAC/WI (AWS) or AWMAC/WI (NAAWS), unless noted otherwise.

B. Thermoset Decorative Panels: Particleboard or medium density fiberboard finished with thermally fused, melamine-impregnated decorative paper complying with LMA SAT-1.

C. High Pressure Decorative Laminate: NEMA LD3, grades as required by woodwork quality standard.

D. Cabinets:
   1. AWI Type Cabinet Construction- Flush Overlay
   2. Woodworks Institution Construction Type: Multiple-self supporting units rigidly joined together.
   3. Woodworks Instituion Cabinet Doors and Drawer Front Style: Flush Overlay
   4. Drawer Side Construction: Multiple-dovetail.
   5. Materials for Semi-exposed Surfaces Other Than Drawer Bodies: High-pressure decorative laminate, Grade VS.

6. Drawer Sides and Backs: Thermoset decorative panels.
7. Drawer Bottoms: Thermoset decorative panels.

2.02 WOOD-BASED COMPONENTS

A. Wood fabricated from old growth timber is not permitted.

2.03 LAMINATE MATERIALS

A. Manufacturers:
   1. Formica Corporation: www.formica.com/#sle.
   2. Panolam Industries International, Inc; Nevamar Standard HPL: www.panolam.com/#sle.
   3. Panolam Industries International, Inc; Pionite Standard HPL: www.panolam.com/#sle.
   4. Wilsonart LLC: www.wilsonart.com/#sle.

B. Laminate Cladding for Exposed Surfaces: High-pressure decorative laminate as follows:
   1. Horizontal Surfaces Other Than Tops: Grade HGS
   2. Veritcal Surfaces: Grade HGS, 0.028 inch nominatl thickness, through color.
   3. Post-Formed Horizontal Surfaces: Grade HGP
   4. Edges: Grade HGS
   5. Edge Style: Same as laminate cladding on horizontal surfaces.
   6. Color(s) : To be selected from manufacturer standard colors.

C. General Notes on Laminate Grades and Thicknesses:
   1. Grade HGS is 1.2 mm thick.
   2. Grade HGP is 1.0 mm thick.
   3. Grade VGS is 0.7 mm thick.
   4. AWI and WI standards require minimum thickness of 0.028 inch (0.7 mm) regardless of surface type.

2.04 HARDWARE

A. Door and Drawer Pulls: Mockett slender bar pull #DP252A-5 3/8" in sating nickel finish (17S).

B. Catches: Push-in magnetic catches, BHMA A156.9, B03131.

C. Drawer Slides: BHMA A156.9, B05091

D. Box Drawer Slide: Grade 1; for drawers not more than 6 inches high and 24 inches wide.

E. File Drawer Slides: Grade 1HD-200; for drawers more than 6 inches high or 24 inches wide.

F. Pencil Drawer Slides: Grade 2; for drawers not more than 3 inches high and 24 inches wide.

G. Door Locks: BHMA A156.11, E07121.

H. Drawer Locks: BHMA A156.11, E07041.

I. Exposed Hardware Finish:
   1. For exposed hardware, provide finish that complies with BHMA A156.18 finish number indicated.
   2. Brushed Chrome

J. Door Silencers: Drill stops to receive door silencers.
   1. Frameless Concealed Hinges (European Type):
      a. BHMA A156.9, B01602, 120 degrees of opening, self closing.

2.05 MISCELLANEOUS MATERIALS

A. Furring and Blocking, Shims, and Hanging Strips: Softwood or hardwood lumber, kiln-dried not less than 15 percent moisture content.

B. Adhesives General: Do not use adhesives that contain ure formaldehyde.

C. Stain, Shellac, Varnish and Finishing Materials: As specified in Section 09 9000.

D. ADA Vanity Brackets: A&M Vanity Brackets for 24" deep top, US ADA stainless finish, screws and spring clips for panel skirt.

2.06 FABRICATION

A. Assembly: Shop assemble cabinets for delivery to site in units easily handled and to permit passage through building openings.

B. Edging: Fit shelves, doors, and exposed edges with specified edging. Do not use more than one piece for any single length.

C. Fitting: When necessary to cut and fit on site, provide materials with ample allowance for cutting. Provide matching trim for scribing and site cutting.

D. Mechanically fasten back splash to countertops as recommended by laminate manufacturer at 16 inches on center.

E. Provide cutouts for plumbing fixtures. Verify locations of cutouts from on-site dimensions. Prime paint cut edges.

2.07 SHOP FINISHING

A. Finish architectural woodwork at fabrication shop. Defer only final touchup, cleaning, and polishing until after installation.

PART 3 EXECUTION

3.01 EXAMINATION

A. Verify adequacy of backing and support framing.

B. Verify location and sizes of utility rough-in associated with work of this section.

3.02 INSTALLATION

A. Install work in accordance with AWI/AWMAC/WI (AWS) or AWMAC/WI (NAAWS) requirements for grade indicated.

B. Set and secure custom cabinets in place, assuring that they are rigid, plumb, and level.

C. Anchor woodwork to anchors or blocking built in or directly attached to substrates. Secure with countersunk, concealed fasteners and blind nailing as required for complete installation. Use fine finishing nails for exposed fastening, countersunk and filled flush with woodwork and matching final finish if transparent finish is indicated.

D. Cabinets: Install without distortion so doors and drawers fit openings properly and are accurately aligned. Adjust hardware to center doors and drawers in opening and to provide unencumbered operation.

E. Fasten wall cabinets through back, near top and bottom, at ends and not more than 16 inches o.c. with No. 10 wafer-head screws sized for 1-inch penetration into wood framing, blocking, or hanging strips.

F. Countertops: Anchor securely by screwing through corner blocks of base cabinets or other supports into underside of countertop. Caulk space between backsplash and wall with sealant specified in Division 07 "Joint Sealants".

G. Anchor countertop knee bracing into solid wood blockig within wall with screws as required to withstand 150lb. load at outer edge of countertop.

H. Shelving Standards and Brackets: Install per manufacturer's recommendations. Fasten standards and brackets in-wall solid wood blocking.

3.03 ADJUSTING

A. Adjust installed work.

B. Adjust moving or operating parts to function smoothly and correctly.

3.04 CLEANING

A. Clean casework, counters, shelves, hardware, fittings, and fixtures.

END OF SECTION

SECTION 07 4113
METAL ROOF PANELS

PART 1 GENERAL

1.01 SECTION INCLUDES

A. Fastening System

B. Factory finishing

C. Accessories and miscellaneous components

1.02 RELATED REQUIREMENTS

A. Section 07 9200 - Joint Sealants: Sealing joints between metal roof panel system and adjacent construction.

B. Section 13 3419 - Metal Building Systems: Roof framing and purlins

1.03 REFERENCE STANDARDS

A. American Institute of Steel Construction (AISC):
   1. AISC 341 - Seismic Provisions for Structural Steel Buildings (when appropriate)
   2. AISC 360 - Specification for Structural Steel Buildings
   3. AISC Design Guide 3 - Serviceability for Steel Buildings

B. American Iron and Steel Institute (AISI):
   1. AISI S100 - North American Specification for the Design of Cold-Formed Steel Structural Members.

C. American Welding Society (ASW):
   1. AWS D1.1/D1.1M - Structural Welding Code - Steel
   2. AWS D1.3/D1.3M - Structural Welding Code - Sheet Steel

D. Association for Iron and Steel Technology (AISE):
   1. AISE 13 - Specifications for Design and Construction of Mill Buildings

E. ASTM International (ASTM):
   1. ASTM A325 - Standard Specification for Structural Bolts, Steel, Heat Treated, 120/105 ksi minimum tensile strength
   2. ASTM A653/A653M - Standard Specification for Steel Sheet, Zinc-Coated (Galvanized) or Zinc-Iron Alloy-Coated (Galvannealed) by the Hot-Dip Process.
   3. ASTM A792/A792M - Standard Specification for Steel Sheet, 55% Aluminum-Zinc Alloy-Coated by the Hot-Dip Process.
   4. ASTM D522 - Standard Test Methods for Mandrel Bend Test of Attached Organic Coatings
   5. ASTM D523 - Standard Test Method for Specular Gloss
   6. ASTM D968 - Standard Test Method for Abrasion Resistance of Organic Coatings by Falling Abrasive.
   7. ASTM D1308 - Standard Test Method for Abrasion Resistance of Organic Coatings by Falling Abrasive.
   8. ASTM D2244 - Standard Practice for Calculation of Color Tolerances and Color Differences from Instrumentally Measures Color Coordinates
   9. ASTM D2247 - Standard Practice for Testing Water Resistance of Coatings in 100% Relative Humidty
   10. ASTM D2794 - Standard Test Method for Resistance of Organic Coatings to the Effects of Rapid Deformation (Impact)
   11. ASTM D3361 - Standard Practice for Unfiltered Open-Flame Carbon-Air Exposures of Paint and Related Coatings.

12. ASTM D4214 - Standard Test Methods for Evaluating the Degree of Chalking of Exterior Paint Films
13. ASTM E84 - Standard Test Method for Surface Burning Characteristics of Building Materials
14. ASTM E96/E96M - Standard Test Method for Water Vapor Transmission of Materials
15. ASTM E1592 - Standard Test Method for Structural Performance of Sheet Metal Roof and Siding Systems by Uniform Static Air Pressure Difference.
16. ASTM G87 - Standard Practice for Conducting Moist S02 Tests.

F. FM Global:
1. FMRC Standard 4471 - Approval standard for class 1 roofs for hail damage resistance, combustibility, and wind uplift resistance.

G. Metal Building Manufacturers Association (MBMA):
1. MDMA metal bulding systems manual
2. Seismic design guide for metal building systems

H. North American Insulation Manufacturers Association (NAIMA):
1. NAIMA 202 - Standard for flexible fiber glass insulation to be laminated for use in metal buildings

I. The Society for Protective Coatings (SSPC):
1. SSPC-Paint 15 - Primer for use over head cleaned steel performs to SSPC-Paint 15 standards.
2. SSPC-SP2 - hand tool cleaning

J. Underwriters Laboratories (UL):
1. UL 580 - Standard for tests for uplift resistance of roof assemblies.
2. UL 723 - Standard for Test for Surface Burning Characteristics of Building Materials

1.04 GENERAL

A. The extend of the standing seam metal roof system as indicated on drawings and by provisions of this section is defined to include liner panel, roof purlins and supplementary structural framing required to support roof mounted equipment; metal roof panels; roof insulation; eave and gable trim; flashings, sealant, fasteners, and miscellaneous flashings, closures and accessories directly related to the structural standing seam metal roof system.

B. Manufacturer's standard components shall be used provided components, accessories, and complete structure conform to design appearance shown and to specified requirements.

C. Performance Requirements: Provide performed systems that comply with performance requirements indicated based on pre-testing of installed panels using the following methods.
1. Air Infiltration: ASTM E 283
2. Water Penetration: ASTM E331
3. Structural Properties: ASTM E 330.
4. Thermal: ASTM C 236
5. Wind Uplift Resistance UL 580 Class 90

D. Design Criteria:
1. For structural steel members, comply with AISC "Specifications for the Design, Fabrication , and Erection of Structural Steel for Buildings".
2. For light gage steel members, comply with AISI "Specifications for the Design of Cold-Formed Steel Structural Members".
3. Design secondary members and covering for applicable loads and combination of loads in accordance with Metal Building Manufacturer's Association (MBMA) " Recommended Design Practice Manual".
4. For welded connections, comply with AWS "Structural Welding Code".
5. Design Loads: The standing seam metal roof system shall be designed to sustain the specific loads in accordance with the current edition of the Indiana Building Code which shall meet or exceed the County Climatic Data, as published in the 2018 Edition of the MBMA Metal Building Systems Manual. The basic design wind uplift loading shall be

calculated from a basic wind speed of 90 miles per hour in accordance with the Indiana Building Code without exceeding the allowable working stresses.

6. Wind Uplift: Provide roof panel system including supports meeting requirements of Underwriters Laboratories, Inc. for Class 90 wind uplift resistance.

E. Fire-Resistance Ratings: Provide structural standing seam metal roof system based on assemblies tested and listed by testing and inspection organization acceptable to authority having jurisdiction.

F. Supplier: A single standing seam metal roof system supplier shall furnish the system specified in this section and shall be a firm that is and has been for a minimum period of one year prior to bid date and an authorized and franchised dealer of the standing seam metal roof system manufacturer.

G. Installer: The structural standing seam metal roof system installer shall be an "experienced" firm as defined herein.

1.05 SUBMITTALS

A. See Section 01 3000 - Administrative Requirements for submittal procedures.

B. Prior to award of contract
   1. Manufacturer's product data describing standing seam metal roof system.
   2. Supplier Certification.
   3. Installer Certification referencing project.
   4. Manufacturer's Certification stating specified warranties will be provided for project.

C. Prior to commencement of Work:
   1. Erection shop drawings showing roof framing, transverse cross sections, covering and trim details, and accessory installation details to clearly indicate proper assembly of building components.
   2. Samples: Submit two (2) each of the following for Architect's review:
      a. Twelve inch long by actual width of roofing with required finish.
      b. Fasteners
      c. Sealant and closures
      d. Twelve inch long minimum x twelve inch wide minimum of actual structural standing seam metal roof system lap seams for both sides of a typical panel.
      e. Thermal Insulation

D. Certification by manufacturer that products have been pre-tested and comply with performance requirements indicated:
   1. Loading requirements indicated
   2. Codes of authorities having jurisdiction
   3. Approval that standing seam metal roof system has been tested and approved by Underwriter's Laboratory as Class 90.

E. Warranty: Submit specified manufacturer's warranty and ensure that forms have been completed in Owner's name and are registered with manufacturer.

1.06 QUALITY ASSURANCE

A. Manufacturer Qualifications: Company specializing in the manufacture of roofing systems similar to those required for this project.

B. Manufacturer Qualifications: Company specializing in the manufacture of roofing systems similar to those required for this project, with not less than 10 years of documented experience.

C. Installer Qualifications: Company trained and authorized by roofing system manufacturer with regularly engaged, for past 5 years, in installation of metal building systems of similar type to that specified.
   1. Employ persons trained for installation of metal building systems

D. Maintenance Instructions: At the time of issuance of the warranty, a full set of instructions shall be included detailing preventative maintenance and noting a list of harmful substances which may damage the roof system.

E. A qualified technical representative of the manufacturer shall be available to make recommendations necessary to ensure compliance with the specifications and to make recommendations where unforeseen conditions become apparent to the Architect.

F. Provide special protection on newly completed roofing to avoid unusual wear and tear during installation.

G. Protect building walls, rooftop units, windows and other vulnerable components during installation.

H. Comply with roofing manufacturer recommendations as to allowable weather conditions during installation. Also, take into account the effect of high winds during installation of the roofing system.

I. Coordinate application of the roofing system with other trades in such a manner that the complete installations weather tight and in accordance with all approved details and warranty requirements.

1.07 DELIVERY, STORAGE, AND HANDLING

A. Provide strippable plastic protection on prefinished roofing panels for removal after installation.

B. Store roofing panels on project site as recommended by manufacturer to minimize damage to panels prior to installation.

C. Deliver and store structural standing seam metal roof system components and other manufactured items so they will not be damaged or deformed. Stack materials on platforms or pallets, covered with tarpaulins or other suitable watertight ventilated covering. Store metal sheets or panels so that water accumulations will drain freely. Do not store sheets or panels in contact with other material which might cause staining.

1.08 WARRANTY

A. See Section 01 7800 - Closeout Submittals for additional warranty requirements.

B. Roofing Contractor's Warranty: Provide roofing contractor's "Roofing Warranty" typical in form and content indicated by Midwest Roofing Contractors Association, Inc. approved guarantee form no.2007B, 2-years.

C. Finish Warranty: Building System Manufacturer shall provide a written warranty of 25 years against perforation of metal roof panels due to corrosion under normal weather and atmospheric conditions.
   1. Warranty Shall be signed by metal roof system manufacturer

D. Manufacturer's Weathertightness Warranty: Watertightness Warranty: Provide standing seam metal roof manufacturer's standard product and contractor workmanship liability "Roofing Manufacturer's Basic Roofing Guarantee" from date of Substantial Completion. Warrant against leaks in roof panels arising out of or caused by ordinary wear and tear under normal weather and atmospheric conditions, defective materials and workmanship for the following period of time: Twenty (20) years.

PART 2 PRODUCTS

2.01 MANUFACTURERS

A. Manufacturers: Subject to compliance with the requirements, provide architectural standing seam metal roof system by one of the following manufacturers:
   1. Standing Seam Metal Roof Systems:
      a. Same as building manufacturer
      b. Basis of Design: Butler Manufacturing Co.; "MR-24".

B. Substitutions: See Section 01 6000 - Product Requirements.

C. Roof System Design:
   1. Design roof panels in accordance with AISI North American Specification for the Design of Cold-Formed Steel Structural Members
   2. Design roof paneling system for a minimum roof slope of 1/4" in 12"

3. Design roof paneling system to support design live, snow and wind loads.
4. Endwall Trim and Roof Transition Flashings: Allow roof panels to move relative to wall panels and/or parapets as roof expands and contracts with temperature changes.

D. Roof System Performance Testing:
1. UL Wind Uplift Classification Rating, UL 580: Class 90
2. Structural Performance Under Uniform Static Pressure Difference: Test roof system in accordance with ASTM E 1592

E. Roof Panels:
1. Factor roll-formed, 24" wide, with 2 major corrugations, 2" high (2-3/4" including seam), 24" on center
2. Flat of the Panel: Cross flutes 6" on center, perpendicular to major corrugations in entire length of panel to reduce wind noise
3. Variable width panels:
   a. For roof lengths not evenly divisble by 2'-0" panel width, factory manufactured variable width (9", 12", 15" 18" and 21" wide) panels shall be used to ensure modular, weathertight roof installation
   b. Minimum length 15'
   c. Supply maximum possible panel lengths
4. Panel Material and Finish:
   a. 24-guage steel coated both sides with layer of acrylic-coated Galvalume aluminum - zinc alloy (approximately 55 percent aluminum, 45 percent zinc) applied by continuous hot-dip method.
   b. Minimum 0.55 -ounce coated weight per square foot as determined by triple-spot test, ASTM A792
   c. Apply clear acrylic film for additional protection
5. Us panels of maximum possible lengths to minimize end laps
6. Extend eave panels beyond structural line of sidewalls
7. Factor Punch panels at panel end to match factory punched holes in eave struct
8. Panel End Splices: Factory
9. Panel end laps: locate directly over, but not fastened to, a supporting secondary roof structural member and be staggered, to avoid 4-panel lap-splice condition
10. End laps: Floating, allows roof panels to expand and contract with roof panel temperature changes
11. Self-Drilling fasteners: Not permitted
12. Ridge Assembly:
    a. Design ridge assembly to allow roof panels to move lengthwise with expansion and contraction as roof panel te
    b. Factory punch parts for correct field assembly
    c. Install panel closures and interior reinforcing straps to seal panel ends at ridge
    d. Do not expose attac
    e. Use lock seam plug to seal lock seam portion
    f. High-Tensile Steel Ridge Cover: Span from panel closure to panel closure and flex as roof system expands and contracts

F. Provision for Expansion and Contraction:
1. Provision for Thermal Expansion Movement of Roof Panels: Clips with
   a. Stainless steel tabs: Factory centered on roof clip when installed to ensure full movement
   b. Maximum force of 8 pounds: Required to initiate tab movement
   c. Each clip accommodates a minimum of 1.25" movement in either direction
2. Roof: Provide for thermal expansion and contraction without detrimental effects on roof panels, with plus or minus 100-degree F temperature difference between interior structural framework of building and of roof panels.

G. Fasteners

1. Make connections of roof panels to structural members, except at eaves, with clips moveable stainless steel tabs, seamed into stan
2. Fasten panel clips to structural members with Scrubolt fasteners in accordance with erection drawings furnished by metal building system manufacturer, using factory punched holes in structural members
   a. Fasteners: Metal-backed rubber washer to serve as torque indicator

H. Accessories:
1. Accessories (i.e ventilators, skylights, gutters, fascia): Standard with metal building system manufacturer, using factory punched holes in structural members
2. Exterior Metal Coating on Gutters, downspouts, gable trim and eave trim: "Butler-Cote" finish system, full-strength 70 percent "Kynar 500" or "Hylar 5000" fluoropolymer (PV
3. Location of standard accessories: Indicated on erection drawings furnished by metal building system manufacturer
4. Material used in flashing and transition parts and furnished as standard by metal building system manufacturer may or may not match roof panel material
   a. Parts: Compatible and not cause corrosive condition
   b. Copper and Lead materials: Do not use with Galvalume panels

I. Energy Conservation
1. Minimize heat loss (thermal short circuit) caused by compression of blanket insulation between structural members and roof panels by use of thermal b

2.02 ATTACHMENT SYSTEM

A. Concealed System: Provide manufacturer's standard stainless steel or nylon-coated aluminum concealed anchor clips designed for specific roofing system and engineered to meet performance requirements, including anticipated thermal movement.

2.03 SECONDARY FRAMING

A. Shop Painting: Clean surfaces to be primed of loose mill scale, rust oil, grease, and other matter precluding paint bond. Follow procedures of SSPC-SP3 for power tool cleaning, and SSPC-SP1 for solvent cleaning.

B. Structural Steel Prime: Prime structural steel secondary framing members with manufacturer's standard rust-inhibitive primer having rust-inhibitive pigment, such as zinc chromate iron-oxide alkyd (TT-P-636) pr (TT-P-664).

2.04 ACCESSORIES

A. Miscellaneous Sheet Metal Items: Provide flashings, gutters, downspouts, trim, moldings, closure strips, preformed crickets, caps, and equipment curbs of the same material, thickness, and finish as used for the roofing panels. Items completely concealed after installation may optionally be made of stainless steel.

B. General Roofing: Provide roofing sheets roll formed to profile indicated and specified. Provide flashings, closures, fillers, metal expansion joints, ridge covers, roof panel mounting clips, gable and eave trim, gutters and other sheet metal accessories factory formed and finished.
1. Allowances for thermal expansion: Standing seam metal roof system shall be designed, fabricated, and installed with moveable panel clips to allow relative movement between roof panels and purlins, gables and ridges due to thermal expansion and permanent deformation to any of the system components. Roof panel end laps shall allow panels to expand and contract without damage to end lap seams. Roof panels are pre-punched to allow minimal field fastener locations. Roof panel end laps must be staggered to insure a continued unbroken panel through each seam.

C. Rib and Ridge Closures: Provide prefabricated, close-fitting components of steel with corrosion resistant finish or combination steel and closed-cell foam.

D. Sealants:
1. Exposed Sealant: Elastomeric; silicone, polyurethane, or silyl-terminated polyether/polyurethane.
2. Concealed Sealant: Non-curing butyl sealant or tape sealant.

3. As recommended by manufacturer.

E. Sealing Tape: 99% solids, pressure sensitive gray polyisobutylene compound tape with release paper backing. Not less than 1/2 inch wide and 1/8 inch thick, non-sag, nontoxic, not-staining and permanently elastic.

2.05 FABRICATION

A. Fabrication: Shop fabricate to the size and section required complete with bearing plates, and other plates as required for erection, welded in place, and with all required holes for anchoring or connections pre-drilled or pre-punched to template dimensions.
   1. Shop connections welded.
   2. Field connections bolted.

PART 3 EXECUTION

3.01 EXAMINATION

A. Do not begin installation of preformed metal roof panels until substrates have been properly prepared.

3.02 PREPARATION

A. Coordinate roofing work with provisions for roof drainage, flashing, trim, penetrations, and other adjoining work to ensure that completed roof will be free of leaks.

B. Remove protective film from surface of roof panels immediately prior to installation; strip film carefully to avoid damage to prefinished surfaces.

C. Separate dissimilar metals by applying a bituminous coating, self-adhering rubberized asphalt sheet, or other permanent method approved by metal roof panel manufacturer.

3.03 INSTALLATION

A. Metal Roof Installation: Butler Manufacturing MR-24 roof system
   1. Install roof system in accordance with metal building system manufacturer's instructions at loc
   2. Install roof system weathertight
   3. Position panel clips by matching hole in clip with factory-punched holes
   4. Position and properly align panels by matching factory-punched holes in panel end with factory-punched holes in eave structural member and by aligning panel with panel clip
   5. Field seam panel laps side laps by self-propelled and portable electrical lock
      a. Machine field forms with final 180 degrees of a 360 degree pittsburgh double-lock standing seam.
      b. Factory applied side lap sealant
   6. Panel end laps: minimum of 6", sealed with sealant (weather sealing compound) and fastened
      a. Join panel laps by 2-piece clamped connection consisting of a bottom reinfor
      b. Locate panel end laps directly over, but not fastened to, supporting secondary roof structural member and stagger, to avoid 4-panel lap-splice condition.

B. Overall: Install roofing system in accordance with approved shop drawings and metal roof panel manufacturer's instructions and recommendations, as applicable to specific project conditions. Anchor all components of roofing system securely in place while allowing
   1. Install roofing system with concealed clips and fasteners, except as otherwise recommended by manufacturer for specific circumstances.
   2. Minimize field cutting of panels. Where field cutting is required, use methods that will not distort panel profiles. Use of torches for field cutting is prohibited.

C. Accessories: Install necessary components that are required for complete roofing assembly, including flashings, gutters, downspouts, trim, moldings, closure strips, preformed crickets, caps, equipment curbs, rib closures, ridge closures, and similar roof accessory items.

D. Sheet Metal Accessories: Install roof curbs, ventilators, louvers and other sheet metal accessories in accordance with manufacturer's recommendations for positive anchorage to building and weather tight mounting.

E. Install horizontally one ply of self adhering waterproofing underlayment shingle style to serve as temporary waterproofing membrane prior to installation of new metal roof system.

F. Roof Panels: Install metal roof panels in accordance with manufacturer's installation instructions, minimizing transverse joints except at junction with penetrations.
   1. Form weathertight standing seams incorporating concealed clips, using an automatic mechanical seaming device approved by panel manufacturer.
   2. Provide concealed clips at panel joints, and apply snap-on battens to provide weathertight joints.
   3. Provide sealant tape or other approved joint sealer at lapped panel joints.

G. Roof Sheets: Secure roof panels to structural by means of a siding clip fastened to the structural and securely locked into the panel seam. Sliding clip shall be centered in mounting clip.
   1. Panel seams shall be mechanical field seam using manufacturer's standard machine seaming device. Cracking or splitting of metal or cracking, peeling, blistering or other damage to panel coating shall not be acceptable. Panels shall be securely fastened to eave structural and sealed watertight.
   2. Panel and splices shall consist of pre-punched and pre-notched roof panels bolted together with a back-up plate or stiffener and sealed weathertight. At least one stiffener strap shall be incorporated as part of end splice assembly. End splices shall be staggered across field of roof so that in no event shall end lap seams occur together in adjacent panels. End lap seams shall be tight and flat. Fish-mouthing between fasteners is not acceptable.

H. Framed Openings: Provide shapes of proper design and size to reinforce openings to carry loads and vibrations imposed, including equipment furnished under mechanical or electrical. Securely attach to building structural frame.

I. Dissimilar Materials: Where aluminum surfaces come in contact with ferrous metal or other incompatible materials, keep aluminum surfaces from direct contact by applications to the other material as follows:
   1. One coat of zinc chromate primer, FS TT-P-645, followed by two coats of aluminum paint, SSPC-Paint 101.
   2. In lieu of two coats of aluminum paint, apply one coat of high build bituminous paint, SSPC-Paint 12, applied to a thickness of 1/16" over zinc chromate primer. Back-paint aluminum surface where impractical to paint other surface.

3.04 CLEANING

A. Clean exposed sheet metal work at completion of installation. Remove grease and oil films, excess joint sealer, handling marks, and debris from installation, leaving the work clean and unmarked, free from dents, creases, waves, scratch marks, or other damage to the finish.

3.05 PROTECTION

A. Do not permit storage of materials or roof traffic on installed roof panels. Provide temporary walkways or planks as necessary to avoid damage to completed work. Protect roofing until completion of project.

B. Touch-up, repair, or replace damaged roof panels or accessories before Date of Substantial Completion.

END OF SECTION

SECTION 07 4213
METAL WALL PANELS

PART 1 GENERAL

1.01 SECTION INCLUDES

A. Manufactured metal panels for exterior wall panels and interior liner panels, with insulation, related flashings, and accessory components.

1.02 RELATED REQUIREMENTS

A. Section 07 2100 - Thermal Insulation.

B. Section 07 9200 - Joint Sealants: Sealing joints between metal wall panel system and adjacent construction.

C. Section 13 3419 - Metal Building Systems

1.03 REFERENCE STANDARDS

A. ASTM A792/A792M - Standard Specification for Steel Sheet, 55% Aluminum-Zinc Alloy-Coated by the Hot-Dip Process; 2023.

1.04 SUBMITTALS

A. See Skillman 01 3300 - Submital Procedure 01 3000 - Administrative Requirements for submittal procedures.

B. Shop Drawings: Indicate dimensions, layout, joints, construction details, support clips, and methods of anchorage.

1.05 QUALITY ASSURANCE

A. Manufacturer Qualifications: Company specializing in manufacturing products specified in this section with minimum three years of documented experience.

B. Installer Qualifications: Company specializing in installing products specified in this section with minimum three years of documented experience.

1.06 DELIVERY, STORAGE, AND HANDLING

A. Protect panels from accelerated weathering by removing or venting sheet plastic shipping wrap.

B. Store prefinished material off the ground and protected from weather; prevent twisting, bending, or abrasion; provide ventilation; slope metal sheets to ensure proper drainage.

C. Prevent contact with materials that may cause discoloration or staining of products.

1.07 FIELD CONDITIONS

A. Do not install wall panels when air temperature or relative humidity are outside manufacturer's limits.

1.08 WARRANTY

A. See SkillmaSection 01 7800 - Closeout Submittals for additional warranty requirements.

PART 2 PRODUCTS

2.01 MANUFACTURERS

A. Design is based on Butler Manufacturing wall panels.

B. Same as Building Manufacturer

2.02 METAL WALL PANEL SYSTEM

A. Wall Panel System: Factory fabricated prefinished metal panel system, site assembled.
   1. Provide exterior wall panels, interior liner panels, and subgirt framing assembly.

2. Design and size components to support assembly dead loads, and to withstand live loads caused by positive and negative wind pressure acting normal to plane of wall.
3. Design Pressure: In accordance with applicable codes.
4. Maximum Allowable Deflection of Panel: L/90 for length(L) of span.
5. Movement: Accommodate movement within system without damage to components or deterioration of seals, movement between system and perimeter components when subject to seasonal temperature cycling; dynamic loading and release of loads; and deflection of structural support framing.
6. Drainage: Provide positive drainage to exterior for moisture entering or condensation occurring within panel system.
7. Fabrication: Formed true to shape, accurate in size, square, and free from distortion or defects; pieces of longest practical lengths.
8. Corners: Factory-fabricated in one continuous piece with minimum 18-inch returns.
9. Exterior Finish: Panel manufacturer's standard polyvinylidene fluoride (PVDF) coating, top coat over epoxy primer.
10. Interior Panel Finish: Panel manufacturer's standard siliconized polyester coating, top coat over recommended primer

B. Exterior Wall Panels:
1. Profile: Vertical;
a. Basis of Design: Butler Thermawall Fluted Panels
1) Main Building
b. Basis of Design: Butler Stylwall II Fluted Panels
1) Cold Storage
2. Side Seams: Manufacturer's standard, sealed with continuous gaskets.
3. Material: Precoated steel sheet, 24 gage, 0.
4. Panel Width: 36 inches.
5. Color: As selected by Architect from manufacturer's standard line.

C. Interior Liner Panels:
1. Profile: Vertical.
2. Side Seams: Interlocking, unsealed.
3. Material: Precoated steel sheet, 26 gauge, 0.0188 inch minimum thickness.
4. Color: As selected by Architect from manufacturer's standard line.

D. Subgirt Framing Assembly:
1. Profile as indicated; to attach panel system to building.

E. Internal and External Corners: Same material, thickness, and finish as exterior sheets; profile to suit system; shop cut and factory mitered to required angles.

F. Trim: Same material, thickness and finish as exterior sheets; brake formed to required profiles.

G. Anchors: Galvanized steel.

2.03 MATERIALS

A. Precoated Steel Sheet: Hot-dipped galvanized steel sheet, ASTM A653/A653M, Structural Steel (SS) or Forming Steel (FS), with G90/Z275 coating; continuous coil-coated on exposed surfaces with specified finish coating and on panel back with specified panel back coating.

B. Insulation: Various types specified in Section 07 2100.

2.04 FINISHES

A. Panel Backside Finish: Panel manufacturer's standard siliconized polyester wash coat.

B. Interior Application, Panel Finish: Panel manufacturer's standard siliconized polyester coating, top coat over recommended primer.

C. Fluoropolymer Coil Coating System: Polyvinylidene fluoride (PVDF) multi-coat superior performing organic coatings system complying with AAMA 2605, including at least 70 percent PVDF resin, and at least 80 percent of coil coated metal surfaces having minimum total dry film thickness (DFT) of 0.9 mil, 0.0009 inch; color and gloss as scheduled.

2.05 ACCESSORIES

A. Gaskets: Manufacturer's standard type suitable for use with system, permanently resilient; ultraviolet and ozone resistant.

B. Sealants:
   1. Concealed Sealants: Non-curing butyl sealant or tape sealant, see Section 07 9200
   2. Exposed Sealant: Elastomeric; silicone, polyurethane, or silyl-terminated polyether/polyurethane.

C. Fasteners: Manufacturer's standard type to suit application; with soft neoprene washers, steel, hot dip galvanized. Fastener cap same color as exterior panel.

D. Field Touch-up Paint: As recommended by panel manufacturer.

PART 3 EXECUTION

3.01 EXAMINATION

A. Verify that building framing members are ready to receive panels.

3.02 INSTALLATION

A. Install panels on walls in accordance with manufacturer's instructions.

B. Protect surfaces in contact with cementitious materials and dissimilar metals with bituminous paint; allow to dry prior to installation.

C. Fasten panels to structural supports; aligned, level, and plumb.

D. Locate joints over supports. Lap panel ends minimum 2 inches.

E. Provide expansion and control joints where indicated.

F. Use concealed fasteners unless otherwise indicated by Architect.

G. Seal and place gaskets to prevent weather penetration. Maintain neat appearance.

3.03 TOLERANCES

A. Offset From True Alignment Between Adjacent Members Abutting or In Line: 1/16 inch, maximum.

B. Variation from Plane or Location As Indicated on Drawings: 1/4 inch, maximum.

3.04 CLEANING

A. Remove site cuttings from finish surfaces.

B. Clean and wash prefinished surfaces with mild soap and water; rinse with clean water.

END OF SECTION

SECTION 08 3613
SECTIONAL DOORS

PART 1 GENERAL

1.01 SECTION INCLUDES

A. Overhead sectional doors, electrically operated.

B. Operating hardware and supports.

C. Electrical controls.

1.02 RELATED REQUIREMENTS

A. Section 26 0583 - Wiring Connections.

1.03 REFERENCE STANDARDS

A. ASTM A653/A653M - Standard Specification for Steel Sheet, Zinc-Coated (Galvanized) or Zinc-Iron Alloy-Coated (Galvannealed) by the Hot-Dip Process; 2023.

B. ASTM C1048 - Standard Specification for Heat-Strengthened and Fully Tempered Flat Glass; 2018.

C. ASTM E283/E283M - Standard Test Method for Determining Rate of Air Leakage Through Exterior Windows, Skylights, Curtain Walls, and Doors Under Specified Pressure Differences Across the Specimen; 2019.

D. ASTM E330/E330M - Standard Test Method for Structural Performance of Exterior Windows, Doors, Skylights and Curtain Walls by Uniform Static Air Pressure Difference; 2014 (Reapproved 2021).

E. DASMA 102 - American National Standard Specifications for Sectional Doors; 2018.

F. ITS (DIR) - Directory of Listed Products; Current Edition.

G. NEMA ICS 2 - Industrial Control and Systems Controllers, Contactors and Overload Relays Rated 600 Volts; 2008 (Reaffirmed 2020).

H. NEMA MG 1 - Motors and Generators; 2021.

I. NEMA 250 - Enclosures for Electrical Equipment (1000 Volts Maximum); 2020.

J. NFPA 70 - National Electrical Code; Most Recent Edition Adopted by Authority Having Jurisdiction, Including All Applicable Amendments and Supplements.

K. UL (DIR) - Online Certifications Directory; Current Edition.

L. UL 325 - Standard for Door, Drapery, Gate, Louver, and Window Operators and Systems; Current Edition, Including All Revisions.

1.04 SUBMITTALS

A. See Skillman Section 01 3300 - Submittal Procudure for submittal procedures.

B. Shop Drawings: Indicate opening dimensions and required tolerances, connection details, anchorage spacing, hardware locations, and installation details.

C. Product Data: Show component construction, anchorage method, and hardware.

D. Manufacturer's Installation Instructions: Include any special procedures required by project conditions.

E. Operation Data: Include normal operation, troubleshooting, and adjusting.

F. Maintenance Data: Include data for motor and transmission, shaft and gearing, lubrication frequency, spare part sources.

G. Specimen warranty.

1.05 QUALITY ASSURANCE

A. Manufacturer Qualifications: Company specializing in manufacturing the products specified in this section with minimum three years of documented experience.

B. Installer Qualifications: Company specializing in performing work of type specified and with at least three years documented experience.

C. Comply with applicable code for motor and motor control requirements.

D. Products Requiring Electrical Connection: Listed and classified by ITS (DIR), UL (DIR), or testing firm acceptable to authorities having jurisdiction, as suitable for purpose specified.

1.06 WARRANTY

A. See Skillman Section 01 7800 - Closeout Submittals for warranty requirements.

B. Extended Correction Period: Correct defective work within a 2-year period commencing on Date of Substantial Completion.

C. Manufacturer Warranty: Provide 5-year manufacturer warranty for electric operating equipment. Complete forms in Owner's name and register with manufacturer.

PART 2 PRODUCTS

2.01 MANUFACTURERS

A. Sectional Doors:
   1. C.H.I. Overhead Doors: www.chiohd.com/#sle.
   2. Clopay Building Products: www.clopaydoor.com/#sle.
   3. Overhead Door Corporation: www.overheaddoor.com/#sle.
   4. Raynor Garage Doors: www.raynor.com/#sle.
   5. Wayne-Dalton, a Division of Overhead Door Corporation: www.wayne-dalton.com/#sle.
   6. Substitutions: See Skill See Section 01 6000 - Product Requirements.

2.02 PERFORMANCE REQUIREMENTS

A. Performance: Withstand positive and negative wind loads equal to 1.5 times design wind loads specified by local code without damage or permanent set, when tested in accordance with ASTM E330/E330M, using 10 second duration of maximum load.

B. Air Leakage Rate: Less than 0.40 cfm/sq ft when tested in accordance with ASTM E283/E283M at test pressure difference of 1.57 psf.

C. Thermal Transmittance: U-factor of 0.31 Btu/hr sq ft degrees F, maximum, in accordance with DASMA 102.

2.03 STEEL DOORS

A. Doors: Flush steel, insulated; vertical lift and follow roof pitch as required per location operating style with track and hardware; complying with DASMA 102, Commercial application.
   1. Door Panels: Steel construction; outer steel sheet of 20 gauge, 0.0359 inch minimum thickness, v-grooved profile; inner steel sheet of 20 gauge, 0.0359 inch minimum thickness, flat profile; core reinforcement 0.0598 inch minimum sheet steel roll formed to channel shape, rabbeted weather joints at meeting rails; polyurethane insulation.
   2. Door Nominal Thickness: 2 inches thick.
   3. Exterior Finish:
      a. Factory finished with 70% PVDF; color as selected by Architect.
   4. Interior Finish:
      a. Factory finished with 70% PVDF; color as selected from manufacturers standard line.
   5. Glazed Lites: Four glazed lights per panel, one row; set in place with resilient glazing channel.
      a. Glazing: Fully tempered glass; insulated glass units; clear; 1 inch nominal overall thickness.
   6. Electric Operation: Electric control station.

2.04 COMPONENTS

A. Track: Rolled galvanized steel, 0.090 inch minimum thickness; 2 inch wide, continuous one piece per side; galvanized steel mounting brackets 1/4 inch thick.

B. Hinge and Roller Assemblies: Heavy duty hinges and adjustable roller holders of galvanized steel; floating hardened steel bearing rollers, located at top and bottom of each panel, each side.

C. Lift Mechanism: Torsion spring on cross head shaft, with braided galvanized steel lifting cables.
   1. For Manual Operation: Requiring maximum exertion of 25 lbs force to open.

D. Sill Weatherstripping: Resilient hollow rubber strip, one piece; fitted to bottom of door panel, full length contact.

E. Jamb Weatherstripping: Roll formed steel section full height of jamb, fitted with resilient weatherstripping, placed in moderate contact with door panels.

F. Head Weatherstripping: EPDM rubber seal, one piece full length.

G. Panel Joint Weatherstripping: Neoprene foam seal, one piece full length.

H. Lock: Inside side mounted, adjustable keeper, spring activated latch bar with feature to retain in locked or retracted position; interior handle.

I. Lock Cylinders: See Section 08 7100.

2.05 MATERIALS

A. Sheet Steel: Hot-dipped galvanized steel sheet, ASTM A653/A653M, with G90/Z275 coating, plain surface.

B. Float Glass: Provide insulated float glass units, unless noted otherwise.
   1. Heat-Strengthened and Fully Tempered Types: ASTM C1048.

C. Insulation: Foamed-in-place polyurethane, bonded to facing.
   1. R-value of 7 minimum.
   2. Same thickness as core framing members.

D. Metal Primer Paint: Zinc molybdate type.

2.06 ELECTRIC OPERATION

A. Operator, Controls, Actuators, and Safeties: Comply with UL 325; provide products listed by ITS (DIR), UL (DIR), or testing agency acceptable to authorities having jurisdiction.
   1. Provide interlock switches on motor operated units.

B. Electric Operators:
   1. Mounting: Side mounted on cross head shaft.
   2. Motor Enclosure:
      a. Exterior Doors: NEMA MG 1, Type 4; open drip proof.
   3. Motor Rating: 1 hp; continuous duty.
   4. Motor Voltage: 480 volts, three phase, 60 Hz.
   5. Motor Controller: NEMA ICS 2, full voltage, reversing magnetic motor starter.
   6. Controller Enclosure: NEMA 250, Type 1.
   7. Opening Speed: 12 inches per second.
   8. Brake: Adjustable friction clutch type, activated by motor controller.
   9. Manual override in case of power failure.
   10. See Section 26 0583 for electrical connections.

C. Wiring Terminations: Provide terminal lugs to match branch circuit conductor quantities, sizes, and materials indicated; enclose terminal lugs in terminal box sized to comply with NFPA 70.

D. Control Station: Provide standard three button (Open-Close-Stop) momentary-contact control device for each operator complying with UL 325.
   1. 24 volt circuit.

2. Surface mounted, at interior door jamb.
3. Entrapment Protection Devices: Provide sensing devices and safety mechanisms complying with UL 325.
   a. Primary Device: Provide electric sensing edge as required with momentary-contact control device.

E. Safety Edge: Located at bottom of sectional door panel, full width; electro-mechanical sensitized type, wired to stop and reverse door direction upon striking object; hollow neoprene covered to provide weatherstrip seal.

F. Provide radio control antenna detector.

G. Hand Held Transmitter: Digital control, and resettable.
1. Provide 20 transmitters for each Truck Parking door
2. Provide two transmitters for all other doors
3. Transmitters to have large button to accomodate winter clothing

PART 3 EXECUTION

3.01 EXAMINATION

A. Verify that wall openings are ready to receive work and opening dimensions and tolerances are within specified limits.

B. Verify that electric power is available and of the correct characteristics.

3.02 PREPARATION

A. Prepare opening to permit correct installation of door unit to perimeter air and vapor barrier seal.

B. Apply primer to wood frame.

3.03 INSTALLATION

A. Install door unit assembly in accordance with manufacturer's instructions.

B. Anchor assembly to wall construction and building framing without distortion or stress.

C. Securely brace door tracks suspended from structure. Secure tracks to structural members only.

D. Fit and align door assembly including hardware.

E. Coordinate installation of electrical service. Complete power and control wiring from disconnect to unit components.

F. Coordinate installation of sealants and backing materials at frame perimeter as specified in Section 07 9200.

G. Install perimeter trim and closures.

3.04 TOLERANCES

A. Maximum Variation from Plumb: 1/16 inch.

B. Maximum Variation from Level: 1/16 inch.

C. Longitudinal or Diagonal Warp: Plus or minus 1/8 inch from 10 ft straight edge.

D. Maintain dimensional tolerances and alignment with adjacent work.

3.05 ADJUSTING

A. Adjust door assembly for smooth operation and full contact with weatherstripping.

3.06 CLEANING

A. Clean doors and frames and glazing.

B. Remove temporary labels and visible markings.

3.07 PROTECTION

A. Protect installed products from damage until Date of Substantial Completion.

B. Do not permit construction traffic through overhead door openings after adjustment and cleaning.

END OF SECTION

SECTION 13 3419
METAL BUILDING SYSTEMS

PART 1 GENERAL

1.01 SECTION INCLUDES

A. Manufacturer-engineered, shop-fabricated structural steel building frame.

B. Insulated Metal wall and roof panels including roof mounted equipment curbs.

1.02 RELATED REQUIREMENTS

A. Section 07 4113 - Metal Roof Panels

B. Section 07 4213 - Metal Wall Panels

C. Section 07 9200 - Joint Sealants: Sealing joints between accessory components and wall system.

D. Section 08 1113 - Hollow Metal Doors and Frames.

E. Section 08 3613 - Sectional Doors.

F. Section 08 5113 - Aluminum Windows.

1.03 REFERENCE STANDARDS

A. AISC 360 - Specification for Structural Steel Buildings; 2022.

B. ASTM A36/A36M - Standard Specification for Carbon Structural Steel; 2019.

C. ASTM A153/A153M - Standard Specification for Zinc Coating (Hot-Dip) on Iron and Steel Hardware; 2023.

D. ASTM A500/A500M - Standard Specification for Cold-Formed Welded and Seamless Carbon Steel Structural Tubing in Rounds and Shapes; 2023.

E. ASTM A501/A501M - Standard Specification for Hot-Formed Welded and Seamless Carbon Steel Structural Tubing; 2021.

F. ASTM A529/A529M - Standard Specification for High-Strength Carbon-Manganese Steel of Structural Quality; 2019.

G. ASTM A792/A792M - Standard Specification for Steel Sheet, 55% Aluminum-Zinc Alloy-Coated by the Hot-Dip Process; 2023.

H. ASTM C920 - Standard Specification for Elastomeric Joint Sealants; 2018.

I. ASTM C1107/C1107M - Standard Specification for Packaged Dry, Hydraulic-Cement Grout (Nonshrink); 2020.

J. ASTM E84 - Standard Test Method for Surface Burning Characteristics of Building Materials; 2023d.

K. ASTM E96/E96M - Standard Test Methods for Gravimetric Determination of Water Vapor Transmission Rate of Materials; 2023.

L. ASTM F3125/F3125M - Standard Specification for High Strength Structural Bolts and Assemblies, Steel and Alloy Steel, Heat Treated, Inch Dimensions 120 ksi and 150 ksi Minimum Tensile Strength, and Metric Dimensions 830 MPa and 1040 MPa Minimum Tensile Strength; 2023.

M. AWS A2.4 - Standard Symbols for Welding, Brazing, and Nondestructive Examination; 2020.

N. AWS D1.1/D1.1M - Structural Welding Code - Steel; 2020, with Errata (2023).

O. MBMA (MBSM) - Metal Building Systems Manual; 2019.

P. SSPC-Paint 20 - Zinc-Rich Coating (Type I - Inorganic, and Type II - Organic); 2019.

1.04 SUBMITTALS

A. See Skillman Section 01 3300 - Submittal Procedure, for submittal procedures.

B. Product Data: Provide data on profiles, component dimensions, fasteners.

C. Shop Drawings: Indicate assembly dimensions, locations of structural members, connections; wall and roof system dimensions, panel layout, general construction details, anchors and methods of anchorage, and installation; framing anchor bolt settings, sizes, locations from datum, and foundation loads; indicate welded connections with AWS A2.4 welding symbols; indicate net weld lengths; provide professional seal and signature.

D. Project Record Documents: Record actual locations of concealed components and utilities.

1.05 QUALITY ASSURANCE

A. Designer Qualifications: Design structural components, develop shop drawings, and perform shop and site work under direct supervision of a Professional Structural Engineer experienced in design of this type of work.
   1. Design Engineer Qualifications: Licensed in Indiana.
   2. Cooperate with regulatory agency or authorities having jurisdiction (AHJ), and provide data as requested.

B. Perform work in accordance with AISC 360, MBMA (MBSM), AISC 360, MBMA (MBSM), AISC 360, and MBMA (MBSM).

C. Manufacturer Qualifications: Company specializing in the manufacture of products similar to those required for this project.
   1. Not less than 10 years of documented experience.

D. Erector Qualifications: Company specializing in performing the work of this section with minimum 5 years experience.

E. Welder Qualifications: Welding processes and welding operators qualified in accordance with AWS D1.1/D1.1M and no more than 12 months before start of scheduled welding work.

1.06 WARRANTY

A. See Skillman Section 01 7800 - Closeout Submittals for additional warranty requirements.

B. Correct defective Work within a five year period after Date of Substantial Completion.

C. Provide manufacturer warranty
   1. Include coverage for exterior pre-finished surfaces to cover pre-finished color coat against chipping, cracking or crazing, blistering, peeling, chalking, or fading (25 years). Include coverage for weather tightness of building enclosure elements after installation (20 years).

PART 2 PRODUCTS

2.01 MANUFACTURERS

A. Metal Buildings Systems:
   1. Butler Manufacturing Company: www.butlermfg.com/#sle.
   2. Nucor Building Systems: www.nucorbuildingsystems.com/#sle.
   3. VP Buildings: www.vp.com/#sle.
   4. Substitutions: See Skillman Section 01 6000 - Product Requirements.

2.02 ASSEMBLIES

A. Primary Framing: Rigid frame of rafter beams and columns, intermediate columns, braced end frames, and end wall columns, and wind bracing.

B. Secondary Framing: Purlins, Girts, Eave struts, Flange bracing, Sill supports, and Clips, and other items detailed.

C. Wall System: Preformed metal panels of vertical profile, with sub-girt framing/anchorage assembly, and accessory components.

D. Roof System: Preformed metal panels oriented parallel to slope, with sub-girt framing/anchorage assembly and insulation, and accessory components.

E. Roof Slope: As indicated on drawing

2.03 PERFORMANCE REQUIREMENTS

A. Design structural members to withstand dead load, applicable snow load, and design loads due to pressure and suction of wind calculated in accordance with applicable code.
   1. Coordinate with equipment requirements for increased collateral loads, point loads and movement
   2. Collateral Load: 10 psf

B. Exterior wall and roof system shall withstand imposed loads with maximum allowable deflection of 1/180 of span.
   1. Coordinate with equipment requirements for increased deflection limitations

C. Provide drainage to exterior for water entering or condensation occurring within wall or roof system.

D. Permit movement of components without buckling, failure of joint seals, undue stress on fasteners or other detrimental effects, when subject to temperature range of ____ degrees F.

E. Size and fabricate wall and roof systems free of distortion or defects detrimental to appearance or performance.

2.04 MATERIALS - FRAMING

A. Structural Steel Members: ASTM A36/A36M.

B. Structural Tubing: ASTM A500/A500M Grade B cold-formed.

C. Plate or Bar Stock: ASTM A529/A529M, Grade 50.

D. Bolts, Nuts, and Washers: ASTM F3125/F3125M, Type 1; galvanized to ASTM A153/A153M.

E. Welding Materials: Perform in accordance with AWS D1.1/D1.1M.

F. Primer: SSPC-Paint 20 zinc rich.

G. Grout: ASTM C1107/C1107M; Non-shrink; premixed compound consisting of non-metallic aggregate, cement, water reducing and plasticizing agents.
   1. Minimum Compressive Strength at 48 Hours: 2,000 pounds per square inch.
   2. Minimum Compressive Strength at 28 Days: 7,000 pounds per square inch.

2.05 MATERIALS - WALLS AND ROOF

A. Steel Sheet: ASTM A792/A792M aluminum-zinc alloy coated to AZ50/AZM150.

B. Roof Insulation: Roll glass fiber type, faced with reinforced white vinyl,ASTM E84 Class A flame spread index of 25 or less where exposed .

C. Metal Building Type, Factory Applied, Vapor-Barrier Insulation Facings: Water vapor permeance no greater than 0.10 perm when tested in accordance with ASTM E96/E96M; flame spread index of 25 or less, and smoke developed index of 40 or less when tested in accordance with ASTM E84.

D. Joint Seal Gaskets: Manufacturer's standard type.

E. Fasteners: Manufacturer's standard type, galvanized to comply with requirements of ASTM A 153/A 153M, finish to match adjacent surfaces when exterior exposed.

F. Sealant: ASTM C920, elastomeric sealant with movement capability of at least plus/minus 50 percent; for exposed applications, match adjacent colors as closely as possible.
   1. Refer to Section 07 9200 for additional requirements

G. Roof Curbs: Insulated metal same as roofing, designed for imposed equipment loads, anchor fasteners to equipment, counterflashed to metal roof system.

H. Trim, Closure Pieces, Caps, Flashings, Gutters, Downspouts, Rain Water Diverter, Fascias, and Infills: Same material, thickness and finish as exterior sheets; brake formed to required profiles.

2.06 COMPONENTS

A. Doors and Frames: See Section 08 1113.

B. Overhead Doors: See Section 08 3613.

C. Windows: See Section 08 5113.

2.07 FABRICATION - FRAMING

A. Fabricate members in accordance with AISC 360 for plate, bar, tube, or rolled structural shapes.

B. Provide wall opening framing for doors, windows, and other accessory components.

2.08 FABRICATION - WALL AND ROOF PANELS

A. Wall Panels: Specified in Section 07 4213.

B. Roofing: Specified in Section 07 4113.

C. Liner: Minimum 0.0149 inch metal thickness, manufacturer standard profile.

D. Girts/Purlins: Rolled formed structural shape to receive siding, roofing and liner sheet.

E. Flashings, Closure Pieces, Fascia: Same material and finish as adjacent material, profile to suit system.

2.09 FABRICATION - GUTTERS AND DOWNSPOUTS

A. Form gutters and downspouts of box profile and size indicated to collect and remove water. Fabricate with connection pieces.

B. Form sections in maximum possible lengths. Hem exposed edges. Allow for expansion at joints.

C. Fabricate support straps of same material and finish as roofing metal, color as selected.

2.10 FINISHES

A. Framing Members: Clean, prepare, and shop prime. Do not prime surfaces to be field welded.

B. Exterior Surfaces of Wall Components and Accessories: Precoated enamel on steel of 70% PVDF finish, standard color as selected from manufacturer's standard range.

C. Interior Surfaces of Wall Components and Accessories: Precoated enamel on steel of fluoropolymer finish, standard color as selected from manufacturer's standard range.

PART 3 EXECUTION

3.01 EXAMINATION

A. Verify that foundation, floor slab, mechanical and electrical utilities, and placed anchors are in correct position

3.02 ERECTION - FRAMING

A. Erect framing in accordance with AISC 360.

B. Provide for erection and wind loads. Provide temporary bracing to maintain structure plumb and in alignment until completion of erection and installation of permanent bracing. Locate braced bays as indicated.

C. Set column base plates with non-shrink grout to achieve full plate bearing.

D. Do not field cut or alter structural members without approval.

E. After erection, prime welds, abrasions, and surfaces not shop primed.

3.03 ERECTION - WALL AND ROOF PANELS

A. Install in accordance with manufacturer's instructions.

B. Exercise care when cutting prefinished material to ensure cuttings do not remain on finish surface.

C. Fasten cladding system to structural supports, aligned level and plumb.

D. Locate end laps over supports. End laps minimum 2 inches. Place side laps over bearing.

E. Provide expansion joints where indicated.

F. Use concealed fasteners.

G. Install insulation and vapor retarder per manufacturer recommendations.
   1. Provide spacers as required to avoid buckling of siding panels

H. Install sealant and gaskets, providing weather tight installation.

3.04 ERECTION - GUTTERS AND DOWNSPOUTS

A. Rigidly support and secure components. Join lengths with formed seams sealed watertight. Flash and seal gutters to downspouts.

B. Slope gutters minimum 1/8 inch/ft.

C. Connect downspouts to storm sewer system.

3.05 INSTALLATION - ACCESSORY COMPONENTS IN WALL SYSTEM

A. Install door frames, doors, overhead doors, and windows and glass in accordance with manufacturer's instructions.

B. Seal wall and roof accessories watertight and weather tight with sealant in accordance with 07 9200.

3.06 TOLERANCES

A. Framing Members: 1/4 inch from level; 1/8 inch from plumb.

B. Siding and Roofing: 1/8 inch from true position.

END OF SECTION

TOILET ACCESSORY SCHEDULE

(REFER TO ADA MOUNTING HEIGHTS ON SHEET G101)

NO.	ITEM	DESCRIPTION	MOUNTING HEIGHT	MODEL	REMARKS
A	GRAB BAR- CONCEALED MOUNTING	42" x 1-1/2" DIAMETER	34" A.F.F. TO CENTER	BRADLEY 812 SERIES, MODEL #001-42"	
B	GRAB BAR- CONCEALED MOUNTING	36" x 1-1/2" DIAMETER	34" A.F.F. TO CENTER	BRADLEY 812 SERIES, MODEL #001-36"	
C	GRAB BAR- CONCEALED MOUNTING	18" x 1-1/2" DIAMETER	34" A.F.F. TO CENTER	BRADLEY 812 SERIES, MODEL #001-18"	
D	TOWEL DISPENSER/ WASTE RECEPTACLE	17-1/8" x 56" x 8-25/32" D	44" MAX. TO CENTER OF OPERABLE COMPONENT	BRADLEY MODEL #234 - RECESSED	
E	PAPER TOWEL DISPENSER	11" x 15-5/16" x 4"D	44" MAX. TO CENTER OF OPERABLE COMPONENT	BRADLEY MODEL #250-15	
F	DUAL ROLL TOILET PAPER DISPENSER	20-9/16" x 11-3/8" x 4-7/10"	18" A.F.F. TO BOTTOM	BRADLEY MODEL #5425	
G	TILT MIRROR	24" x 36"	40" A.F.F. TO BOTTOM OF REFLECTIVE SURFACE	BRADLEY MODEL #740-024360	2
H	FRAMELESS MIRROR	36" x 60"	60" TO CENTER OF MIRROR	BRADLEY MODEL #747-036600	2
I	SOAP DISPENSER-SURFACE MOUNTED	4-5/8" x 10-9/16" x 4-3/16"	44" MAX. TO CENTER OF OPERABLE COMPONENT	BRADLEY MODEL #6A01	
J	SHOWER SEAT- REVERSIBLE	34-1/2" x 22"	17"-19" TO TOP OF SEAT	BRADLEY MODEL #9569	4
K	TOWEL HOOK-SURFACE MOUNTED	2" x 2" x 4-7/16"	48" MAX TO TOP OF HOOK	BRADLEY MODEL #9314	1
L	TOWEL BAR-SURFACE MOUNTED	24" WIDE	48" MAX TO TOP OF BAR	BRADLEY MODEL #9065	1
M	SHOWER CURTAIN ROD- CONCEALED MOUNTING	60" x 1-1/4" DIA.	75"-77" FROM THE FLOOR	BRADLEY MODEL #9539	1
N	ANTIMICROBIAL VINYL SHOWER CURTAIN	60" x 72"		BRADLEY MODEL #9533	3
O	FRAMELESS MIRROR	36" x 60"	TOP OF MIRROR AT 6'-2"	BRADLEY MODEL 747-036600	
P	L-SHAPED HORIZONTAL GRAB BAR	24" x 36" x 1-1/4" O.D	33",36" TO TOP OF BAR	AMERICAN SPECIALTIES 3450-P	5
Q	SANITARY NAPKIN DISPOSAL- SURFACE MOUNTED	10 3/4"W x 15 1/8"H x 4"D	24" FROM WALL. SEE G101 FOR MOUNTING HEIGHT	BRADLEY MODEL 4722-15	

REMARKS

1. SATIN STAINLESS STEEL
2. MIRROR NOT TO TOUCH PLUMBING FIXTURE
3. SHOWER CURTAIN HOOKS, BRADLEY MODEL #9536
4. REVERSIBLE-LEFT OR RIGHT HAND CONFIGURATION
5. PEENED FINISH

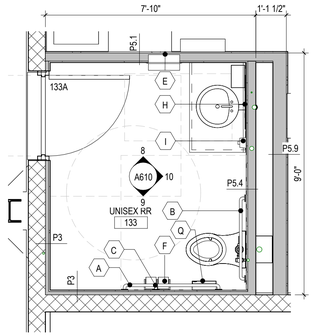

3 Enlarged Restroom
3/8" = 1'-0"

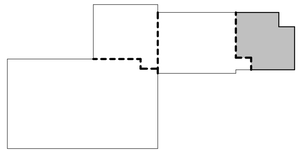

KEY PLAN

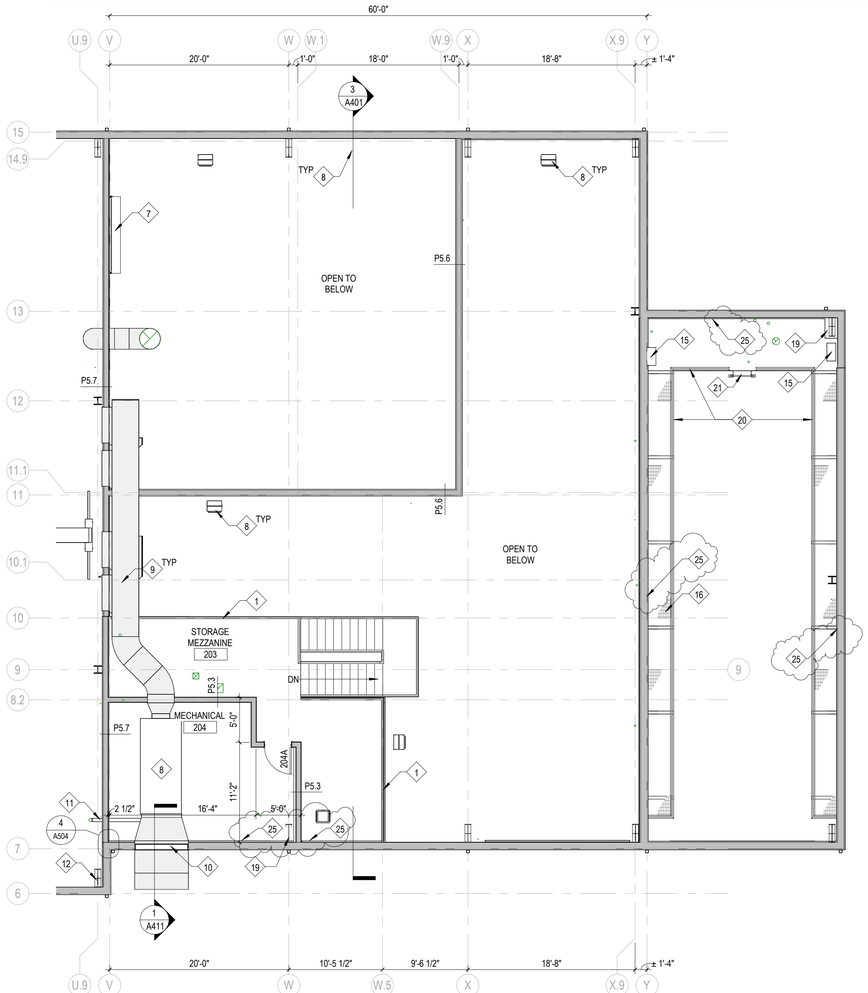

2 Enlarged Maintenance Mezzanine
1/8" = 1'-0"

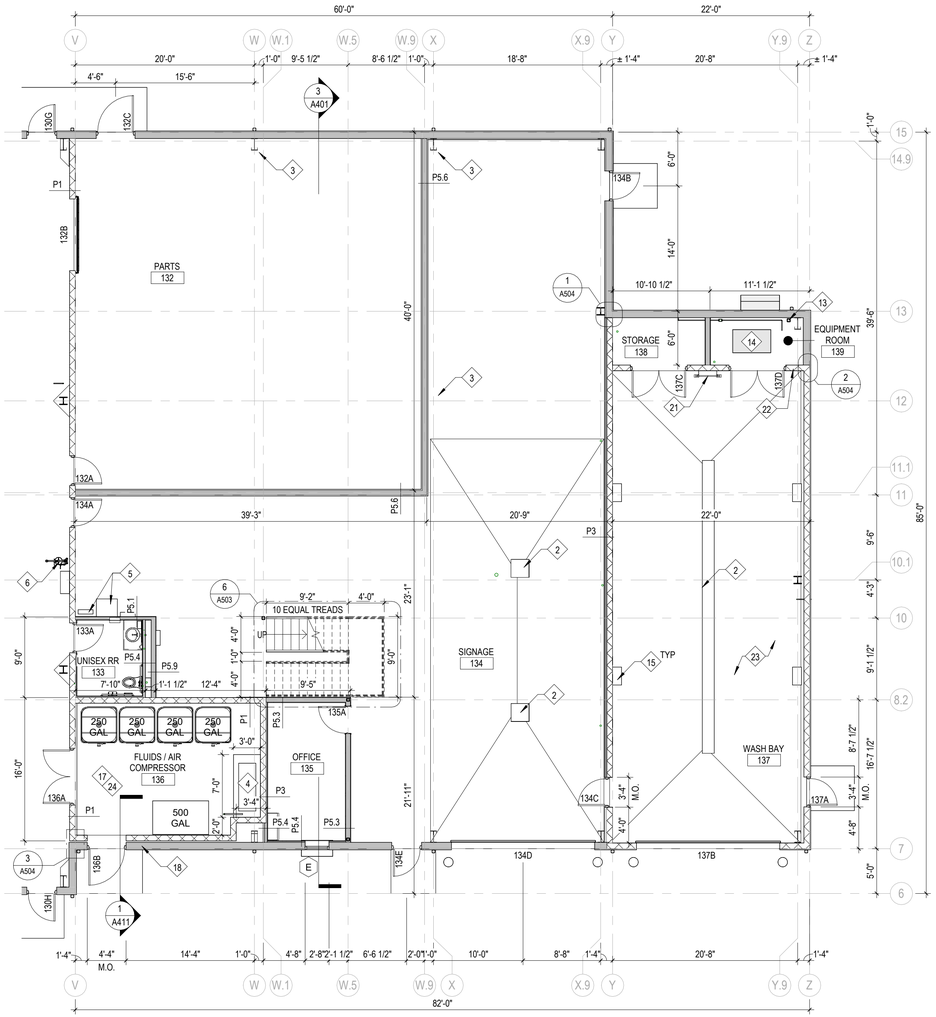

1 Enlarged Parts & Signage
1/8" = 1'-0"

Work Description Notes

1. REMOVABLE RAILING SECTION
2. FLOOR / TRNECH DRAIN, REFER TO STRUCTURAL AND PLUMBING
3. SEPARATE INFILL POUR AT PIERS RELATED TO FUTURE MEZZANINE LOCATION
4. REINSTALL SALVAGED AIR COMPRESSOR. REFER TO ELECTRICAL AND PLUMBING
5. ELECTRICAL EQUIPMENT
6. PLUMBING FIXTURE
7. COILING OVERHEAD DOOR BELOW
8. MECHANICAL EQUIPMENT
9. DUCTWORK, SEE MECHANICAL
10. LOUVER, SEE MECHANICAL
11. NATURAL GAS SUPPLY, SEE MECHANICAL
12. STRUCTURE, REFER TO PRE-ENGINEERED METAL BUILDING MANUFACTURER DRAWINGS
13. STRUCTURE REFER TO S SERIES DRAWINGS
14. PROVIDE PRESSURE WASHER, REFER TO PLUMBING SCHEDULE
15. HOSE REEL, REFER TO PLUMBING, COORDINATE EXACT PLACEMENT WITH OWNER
16. CATWALK, PAINTED, REFER TO STRUCTURAL
17. PROVIDE (4) 250 GALLON FLUID STORAGE CONTAINERS WITH PALLET JACK/FORKLIFT COMPATIBLE BASE. CONTAINERS TO BE COMPATIBLE WITH OIL, HYDRUALIC FLUID, COOLANT, AND TRANSMISSION FLUID. PROVIDE 500 GALLON USED OIL STORAGE TANK
18. PROVIDE 12"x12" INSULATED STAINLESS STEEL ACCESS DOOR AND WALL SLEEVE. INCLUDE PIANO HINGE, DRIP CAP, AND MORTISE CYLINDER KEYED TO BUILDING. BASIS OF DESIGN NYSTROM XTM-CS
19. PROVIDE 1/4" STEEL PLATE MECHANICALLY ANCHORED TO FLOOR SLAB TO INFILL VOID. LEAVE MIN 2" SPACE BETWEEN PLATE AND COLUMN
20. GUARDRAIL, PAINT, REFER TO DETAILS
21. LADDER, REFER TO DETAILS
22. PRESSURE WASHER REMOTE INTERFACE LOCATION
23. PAINT ALL EXPOSED PRIMARY AND SECONDARY STEEL IN THIS AREA
24. PROVIDE TURN KEY FLUID DISTRIBUTION SYSTEM FROM 250 GALLON TANKS TO REELS IN MAINTENANCE BAYS 130. ALL EQUIPMENT, DISPENSERS, PIPING, AND REQUIRED COMPONENTS TO BE PROVIDED. REFER TO SPECIFICATIONS FOR ADDITIONAL INFORMATION.
25. PROVIDE CONTINUOUS POUR STOP WITH LEG 4" ABOVE TOP OF SLAB

New Construction Work for :

Porter County Highway Department - Central Facility

1955 IN-2
Valparaiso, IN 46385

PORTER COUNTY Indiana

MARTIN RILEY
architects • engineers

221 West Baker Street
Fort Wayne, Indiana 46802
pho 260.422.7994
fax 260.426.2067

JACK E. DANIEL REGISTERED No. AR910026 STATE OF INDIANA

REVISION:		DATE:
1	ADDENDUM 1	2024-06-12
2	ADDENDUM 3	2024-0619

DRAWN BY: SAG
REVIEWED BY: ALW
COMMISSION NUMBER: F22146
DATE: 2024-05-24

A104

ENLARGED PLANS

F22146 Porter County Highway Department - Central Facility
6/19/2024 3:16:46 PM
C:\Users\SGrilly\Documents\F22146 - Porter Co Hwy Complex - Valpo - ARCH_sgrilly.rvt
SD/DD/CD

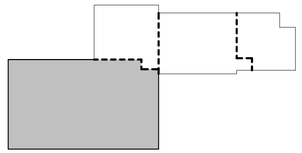

KEY PLAN

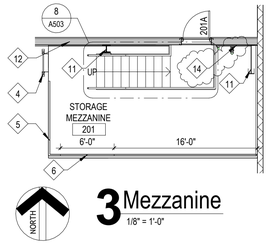

3 Mezzanine
1/8" = 1'-0"

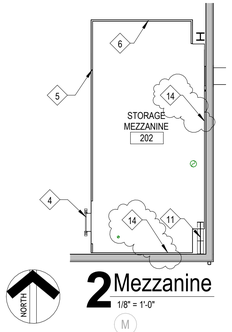

2 Mezzanine
1/8" = 1'-0"

Work Description Notes

1. POURED CONCRETE RAMP, REFER TO STRUCTURAL
2. FLOOR / TRNECH DRAIN, REFER TO STRUCTURAL AND PLUMBING
3. SEPARATE INFILL POUR AT PIERS RELATED TO FUTURE MEZZANINE LOCATION
4. LADDER, REFER TO DETAILS
5. GUARDRAIL, PAINT (PNT-7), REFER TO DETAILS
6. REMOVABLE, GUARDRAIL SECTION
7. 8" BOLLARD, REFER TO DETAIL
8. HANDRAIL, EXTEND PAST END OF RAMP, FOLLOW FRAMING AS NEEDED, PAINT
9. TRUCK PARKING LOCATIONS, FOR REFERENCE ONLY
10. 12" BOLLARD, REFER TO DETAIL
11. PROVIDE 1/4" STEEL PLATE MECHANICALLY ANCHORED TO FLOOR SLAB TO INFILL VOID. LEAVE MIN 2" SPACE BETWEEN PLATE AND COLUMN
12. GYPSUM, INSULATION, AND SPRAY FOAM TO CONTINUE IN CHASE TO EXTENTS OF FIRE RATED WALL AREA
13. FIRE DEPARTMENT CONNECTION: 2.5" SIAMESE CONNECTION, COORDINATE LOCATIONS WITH FIRE SUPPRESSION DESIGNER AND LOCAL AUTHORITIES. PROVIDE REFLECTIVE LETTERING INDICATING LOCATION
14. PROVIDE CONTINUOUS POUR STOP WITH LEG 4" ABOVE TOP OF SLAB

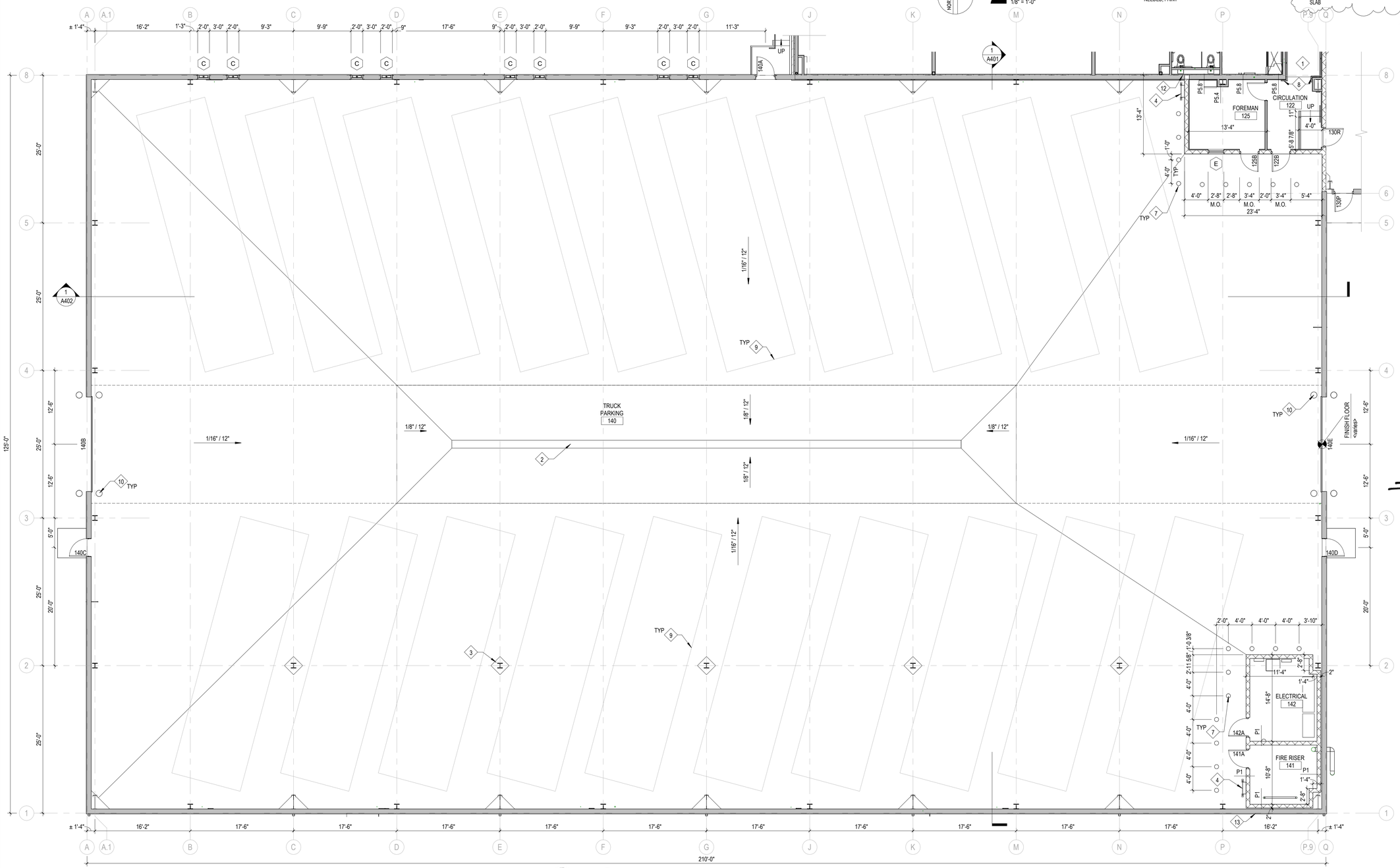

1 Enlarged Truck Parking
1/8" = 1'-0"

New Construction Work for :

Porter County Highway Department - Central Facility

1955 IN-2
Valparaiso, IN 46385

PORTER COUNTY Indiana

MARTIN RILEY
architects • engineers

221 West Baker Street
Fort Wayne, Indiana 46802

pho 260.422.7994
fax 260.426.2067

JACK E. DANIEL REGISTERED No. AR21002G STATE OF INDIANA

REVISION:		DATE:
1	ADDENDUM 3	2024-0619

DRAWN BY: SAG
REVIEWED BY: ALW
COMMISSION NUMBER: F22146
DATE: 2024-05-24

A105

ENLARGED PLANS

F22146 - Porter County Highway Department - Central Facility
6/19/2024 3:16:49 PM
C:\Users\SGilly\Documents\F22146 - Porter Co Hwy Complex - Valpo - ARCH_sgilly.rvt
SD/DD/CD

Work Description Notes

1. BOLLARD, REFER TO 2/A501
2. CONCRETE RETAINING WALL, REFER TO STRUCTURAL
3. ASPAHLT FLOOR, REFER TO CIVIL DRAWINGS
4. REFER TO CIVIL DRAWINGS FOR BUILDING ELEVATION
5. PRE-FABRICATED ARCHED STRUCTURE
6. STRETECHED MEMBRANE ROOFING

Reflected Ceiling Plan Legend

CEILING FAN	LIGHT FIXTURE
EXHAUST FAN	SUPPLY AIR
LIGHT FIXTURE	RETURN AIR
SUSPENDED CEILING SYSTEM	GYPSUM CEILING BOARD

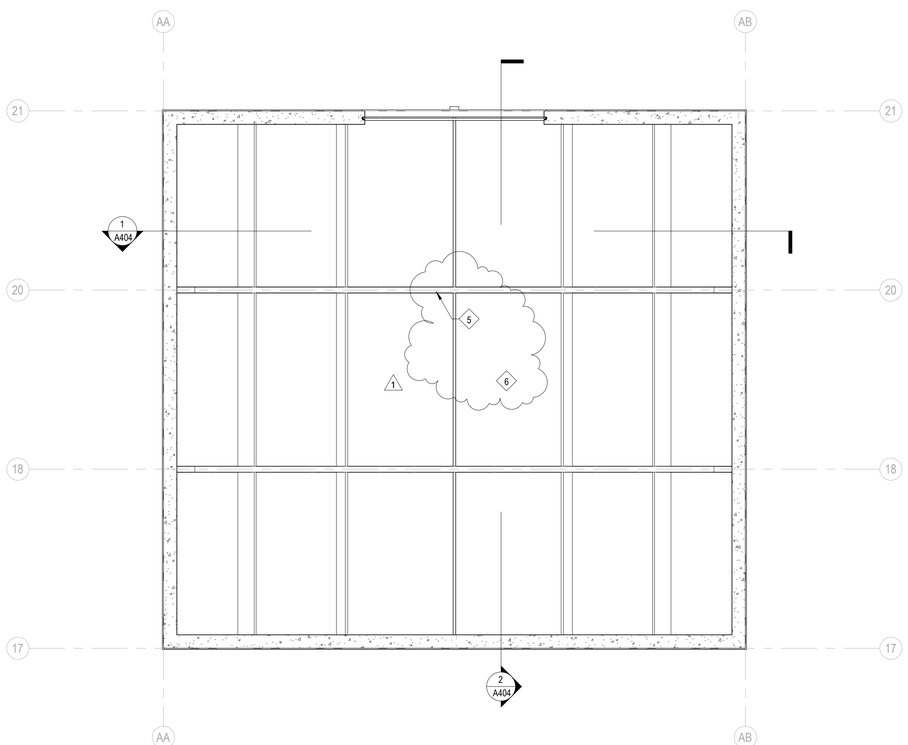

NORTH

2 Relected Ceiling Plan
1/8" = 1'-0"

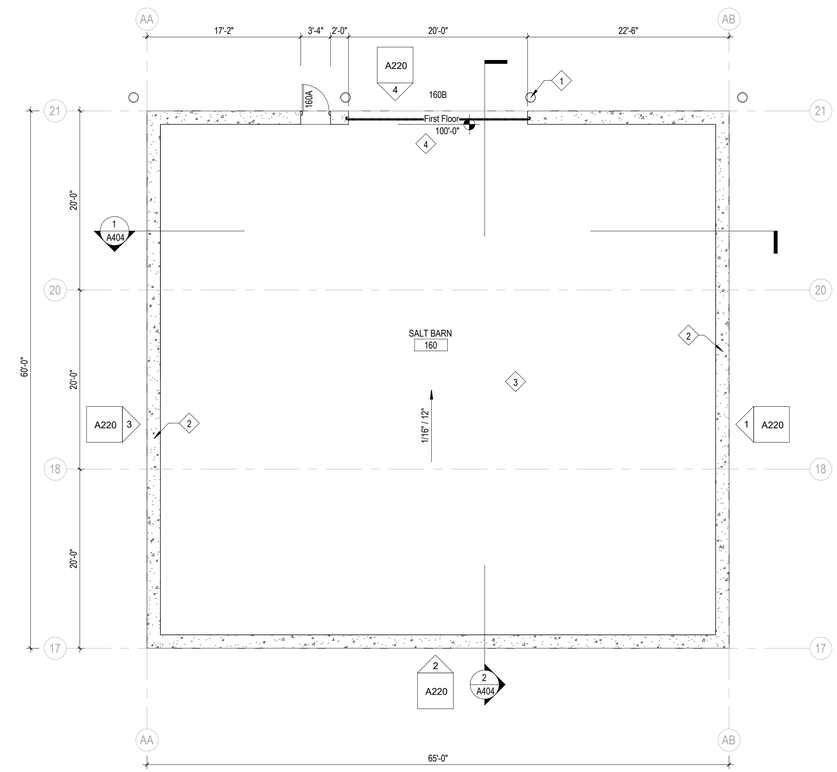

NORTH

1 First Floor
1/8" = 1'-0"

New Construction Work for :

Porter County Highway Department - Central Facility

1955 IN-2
Valparaiso, IN 46385

PORTER COUNTY Indiana

MARTIN RILEY
architects • engineers

221 West Baker Street
Fort Wayne, Indiana 46802

pho 260.422.7994
fax 260.426.2067

JACK E. DANIEL REGISTERED No. AR01026 STATE OF INDIANA

REVISION:		DATE:
1	ADDENDUM 3	2024-0619

DRAWN BY:	SAG	REVIEWED BY:	ALW
COMMISSION NUMBER:	F22146	DATE:	2024-05-24

A120

FLOOR PLAN - SALT BARN

F22146 - Porter County Highway Department - Central Facility
6/19/2024 3:17:06 PM
C:\Users\SGilly\Documents\F22146 - Porter Co Hwy Complex - Valpo - ARCH_sgilly.rvt
SD/DD/CD

Reflected Ceiling Plan Legend

CEILING FAN	LIGHT FIXTURE
EXHAUST FAN	SUPPLY AIR
LIGHT FIXTURE	RETURN AIR
SUSPENDED CEILING SYSTEM	GYPSUM CEILING BOARD

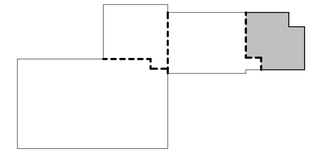

KEY PLAN

Work Description Notes

1. GUTTER / DOWNSPOUT
2. MECHANICAL EQUIPMENT
3. DUCTWORK, SEE MECHANICAL
4. STRUCTURE, REFER TO PRE-ENGINEERED METAL BUILDING MANUFACTURER DRAWINGS
5. STRUCTURE, REFER TO STRUCTURAL DRAWINGS
6. GAS LINE, SEE PLUMBING
7. CATWALK, REFER TO STRUCTURAL

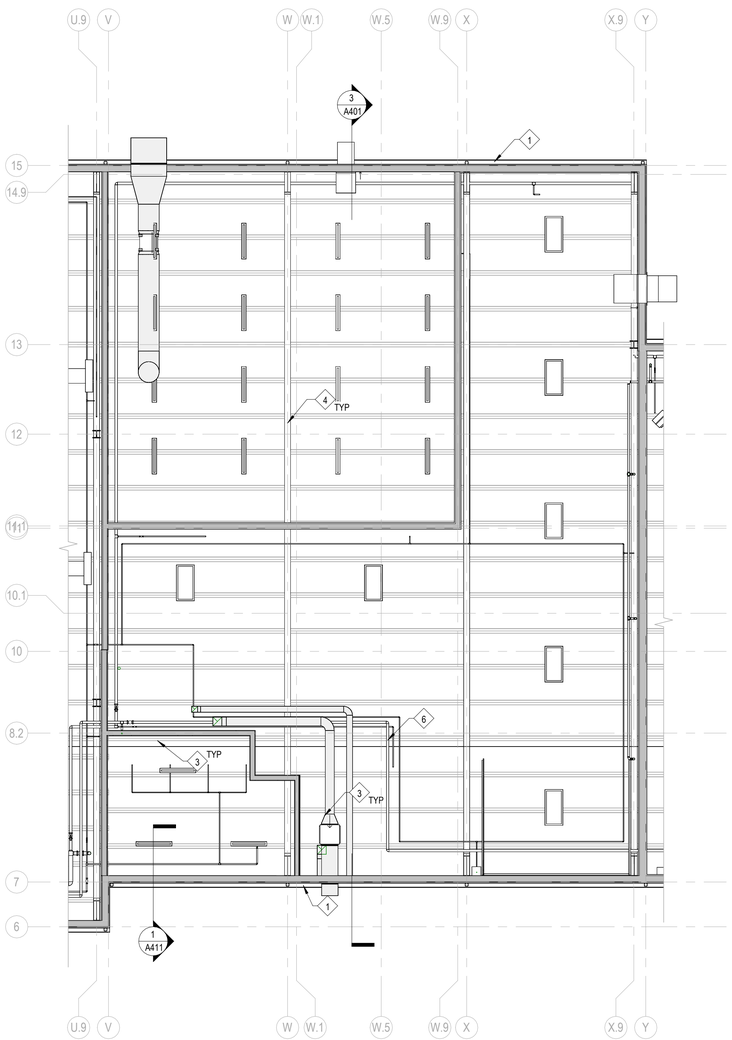

NORTH

3 Mezzanine
1/8" = 1'-0"

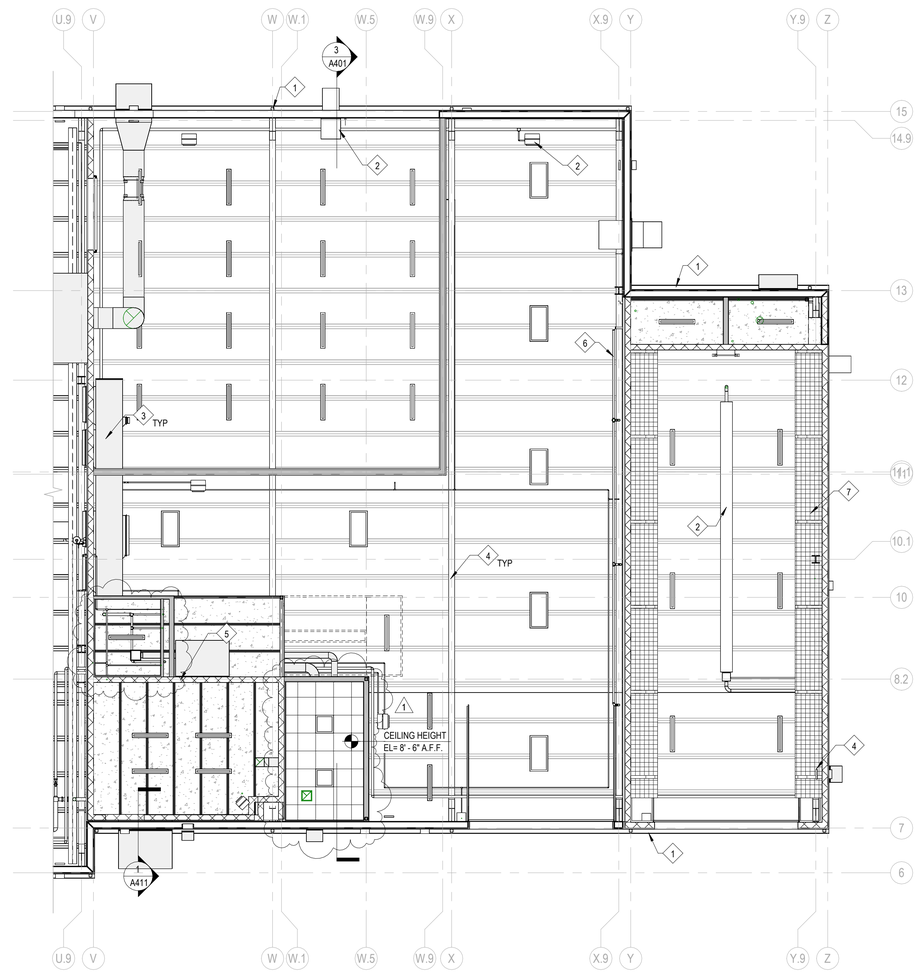

NORTH

2 First Floor
1/8" = 1'-0"

New Construction Work for :

Porter County Highway Department - Central Facility

1955 IN-2
Valparaiso, IN 46385

PORTER COUNTY Indiana

MARTIN RILEY
architects • engineers

221 West Baker Street
Fort Wayne, Indiana 46802

pho 260.422.7994
fax 260.426.2067

MICK E. DAVIS REGISTERED No. AR010026 STATE OF INDIANA

REVISION:		DATE:
1	ADDENDUM 3	2024-0619

DRAWN BY: SAG
REVIEWED BY: ALW
COMMISSION NUMBER: F22146
DATE: 2024-05-24

A303

REFLECTED CEILING PLAN - CENTRAL FACILITY

F22146 Porter County Highway Department - Central Facility
6/19/2024 3:17:13 PM
C:\Users\SGrilly\Documents\F22146 - Porter Co Hwy Complex - Valpo - ARCH_sgrilly.rvt
SD/DD/CD

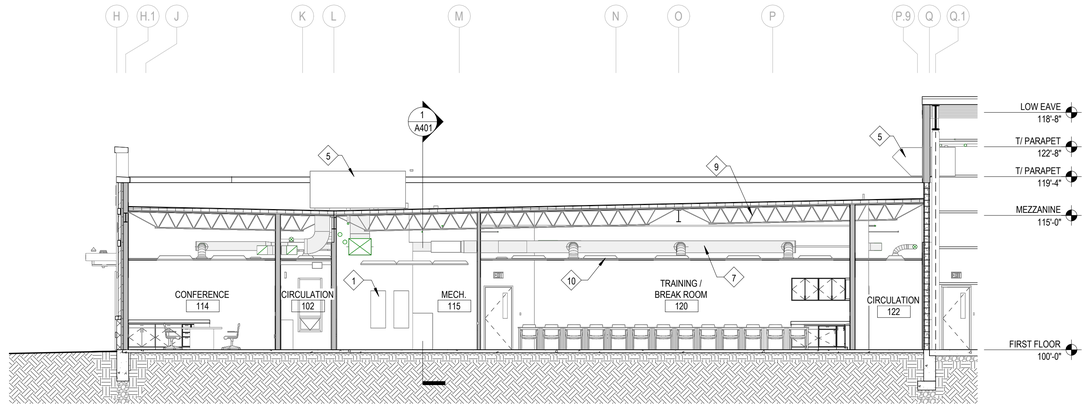

3 Building Section
1/8" = 1'-0"

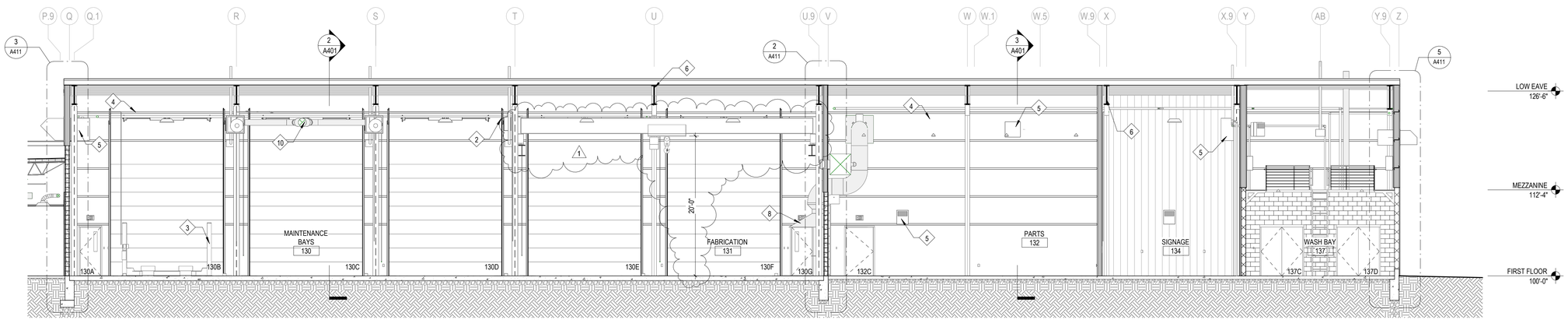

2 Building Section
1/8" = 1'-0"

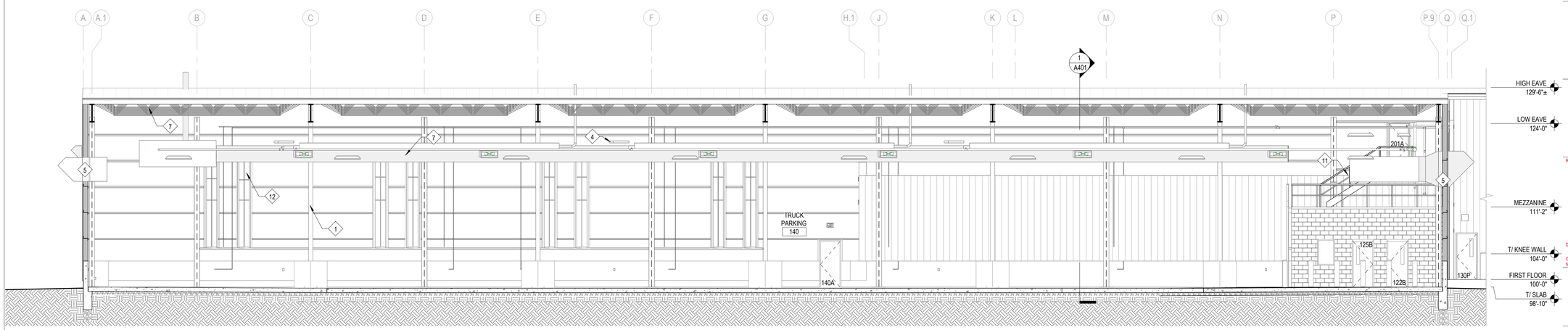

1 Building Section
1/8" = 1'-0"

Work Description Notes

1. ELECTRICAL EQUIPMENT
2. OVERHEAD SECTIONAL DOOR TRACK
3. PROVIDE VEHICLE LIFT. BASIS OF DESIGN: BENDPAK HDS-40 HEAVY DUTY ALI 4 POST TRUCK LIFT, 40,000 LB RATING. COORDINATE WITH ELECTRICAL AND STRUCTURAL
4. GAS LINE, SEE PLUMBING
5. MECHANICAL EQUIPMENT
6. STRUCTURE, REFER TO PRE-ENGINEERED METAL BUILDING MANUFACTURER DRAWINGS
7. DUCTWORK, SEE MECHANICAL
8. WELDING EXHAUST HOOD
9. ROOF FRAMING, REFER TO STRUCTURAL
10. LIGHTS, SEE ELECTRICAL
11. PREFABRICATED METAL STAIR
12. TRANSLUCENT WALL SYSTEM

New Construction Work for :

Porter County Highway Department - Central Facility

1955 IN-2
Valparaiso, IN 46385

PORTER COUNTY Indiana

MARTIN RILEY
architects • engineers

221 West Baker Street
Fort Wayne, Indiana 46802

pho 260.422.7994
fax 260.426.2067

JACK E. DANIEL REGISTERED No. AR01602 STATE OF INDIANA

REVISION:		DATE:
1	ADDENDUM 3	2024-0619

DRAWN BY:	SAG	REVIEWED BY:	ALW
COMMISSION NUMBER:	F22146	DATE:	2024-05-24

A402

BUILDING SECTIONS - CENTRAL FACILITY

F22146 Porter County Highway Department - Central Facility
6/19/2024 3:17:20 PM
C:\Users\Gitly\Documents\F22146 - Porter Co Hwy Complex - Valpo - ARCH_sgitly.rvt
SD/DD/CD

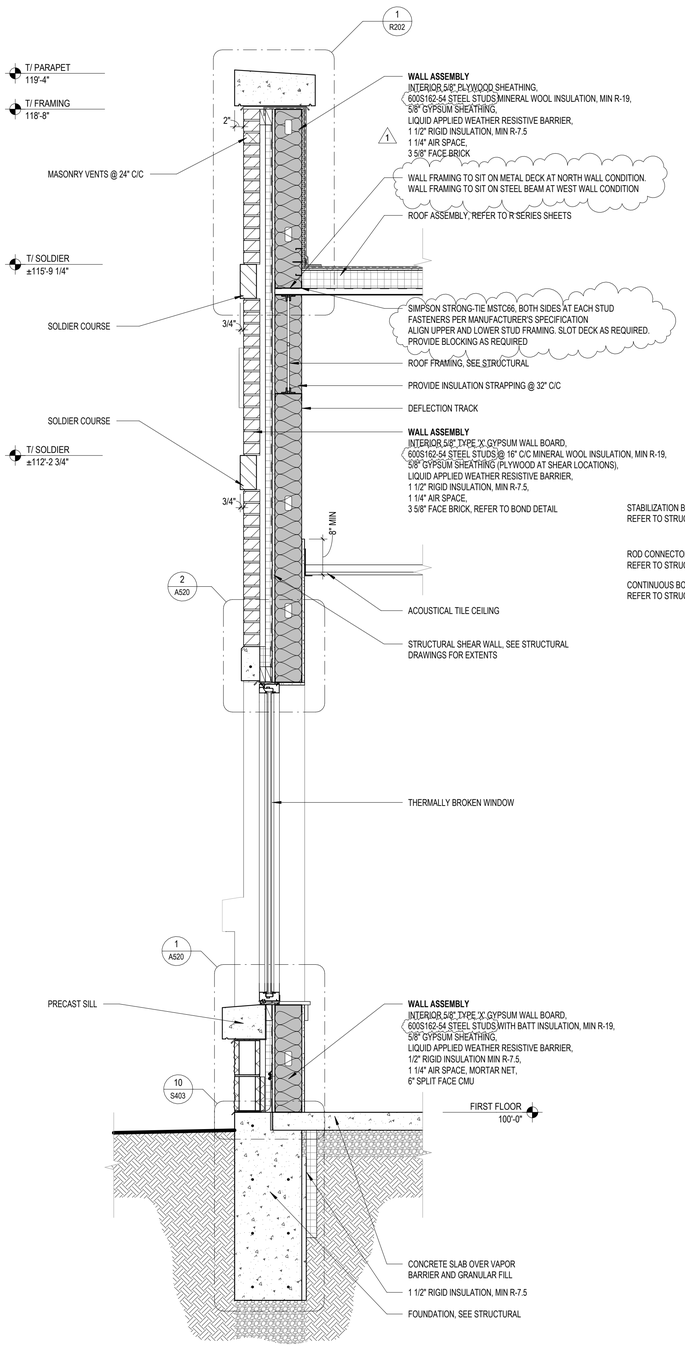

4 Wall Section
3/4" = 1'-0"

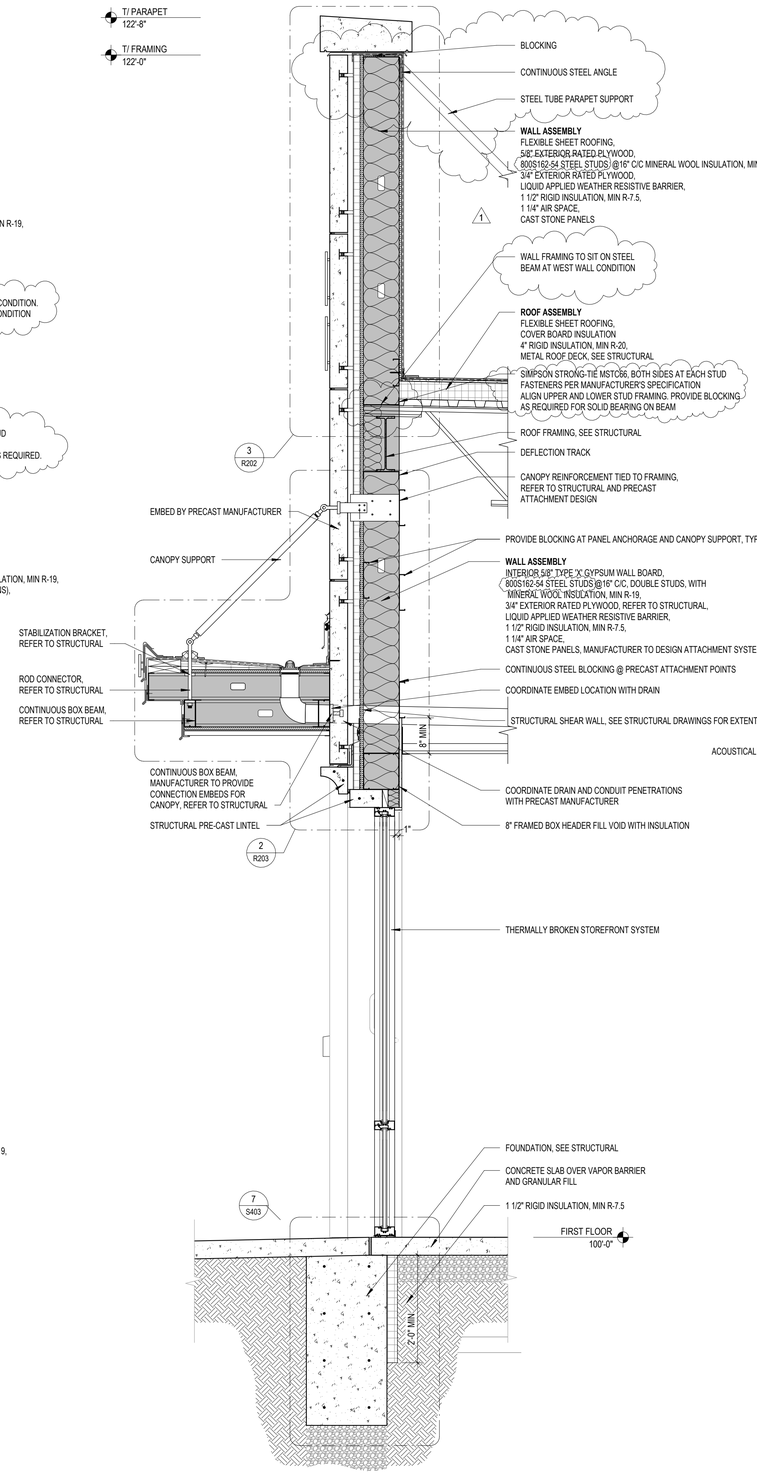

3 Wall Section
3/4" = 1'-0"

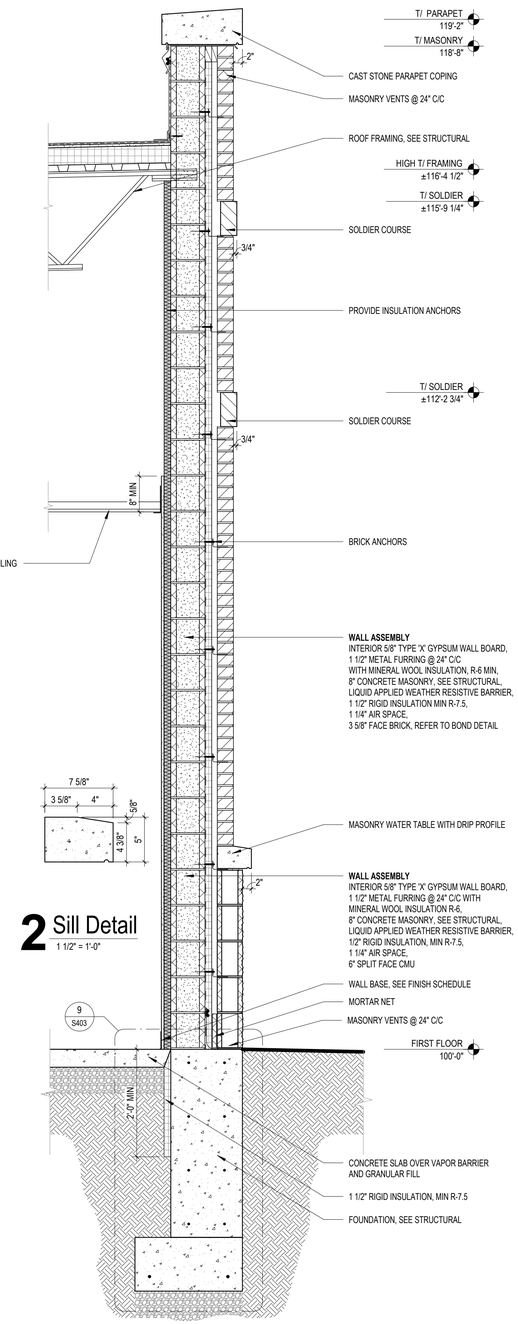

2 Sill Detail
1 1/2" = 1'-0"

1 Wall Section
3/4" = 1'-0"

New Construction Work for :

Porter County Highway Department - Central Facility

1955 IN-2
Valparaiso, IN 46385

PORTER COUNTY Indiana

MARTIN RILEY
architects • engineers

221 West Baker Street
Fort Wayne, Indiana 46802

pho 260.422.7994
fax 260.426.2067

REVISION:		DATE:
1	ADDENDUM 3	2024-0619

DRAWN BY:	SAG	REVIEWED BY:	ALW
COMMISSION NUMBER:	F22146	DATE:	2024-05-24

A410

WALL SECTIONS - CENTRAL FACILITY

F22146 Porter County Highway Department - Central Facility
6/19/2024 3:36:17 PM
C:\Users\SGrilly\Documents\F22146 - Porter Co Hwy Complex - Valpo - ARCH_sgrilly.rvt
SD/DD/CD

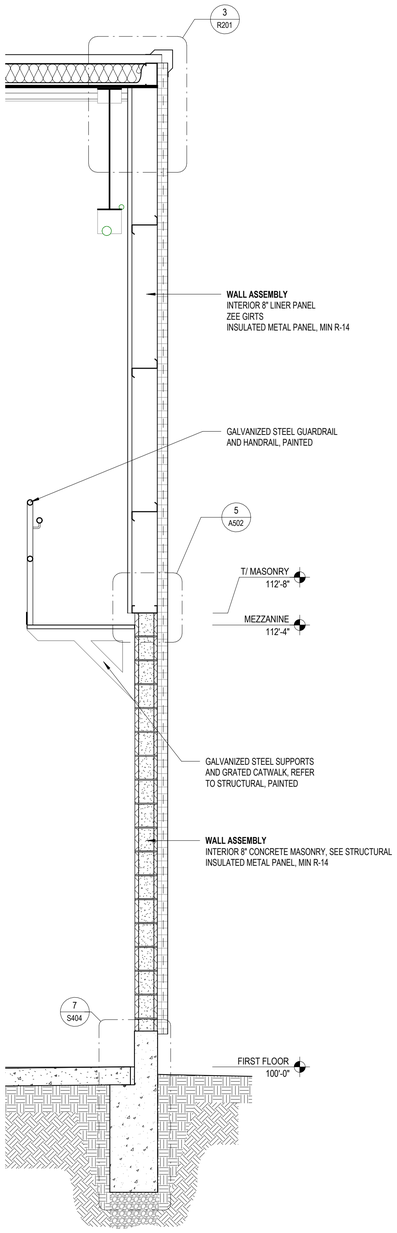

5 Wall Section
1/2" = 1'-0"

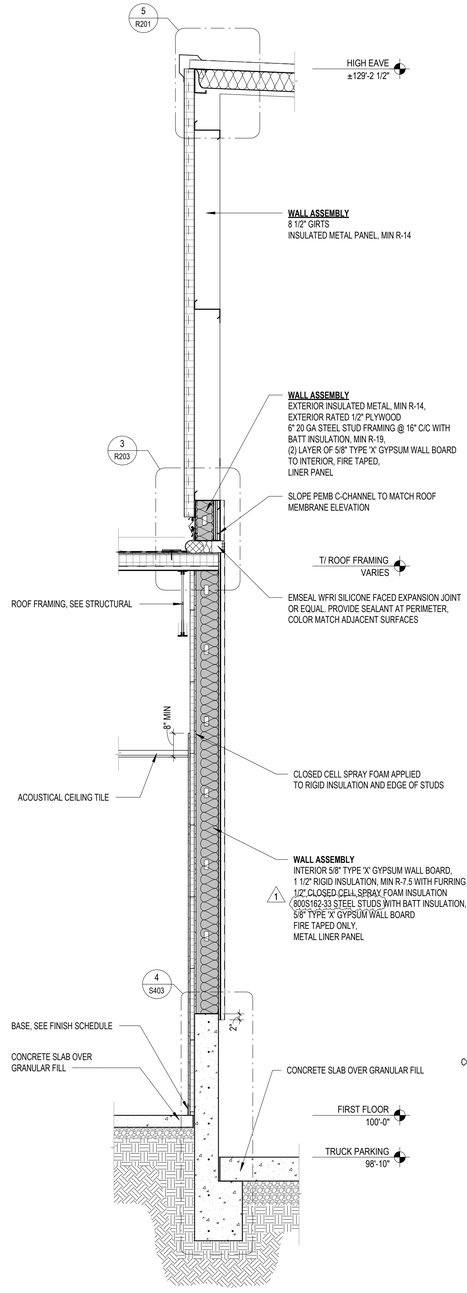

4 Wall Section
1/2" = 1'-0"

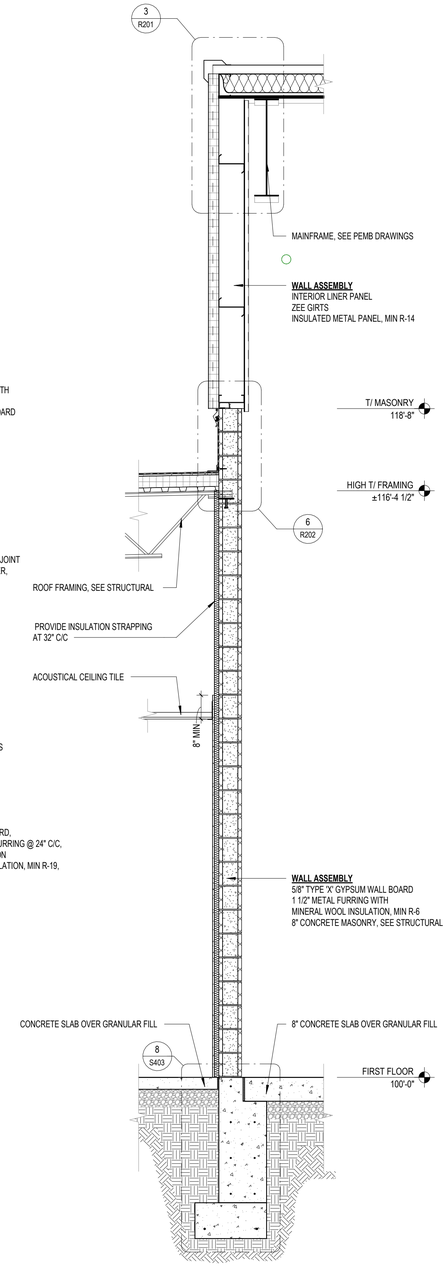

3 Wall Section
1/2" = 1'-0"

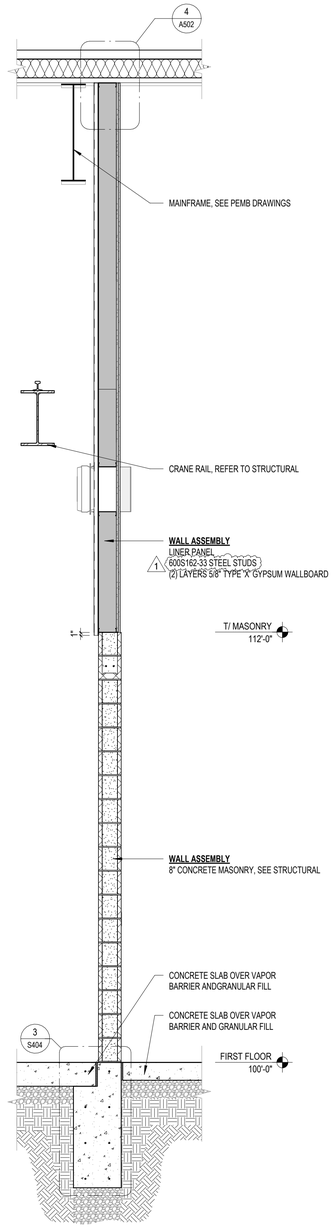

2 Wall Section
1/2" = 1'-0"

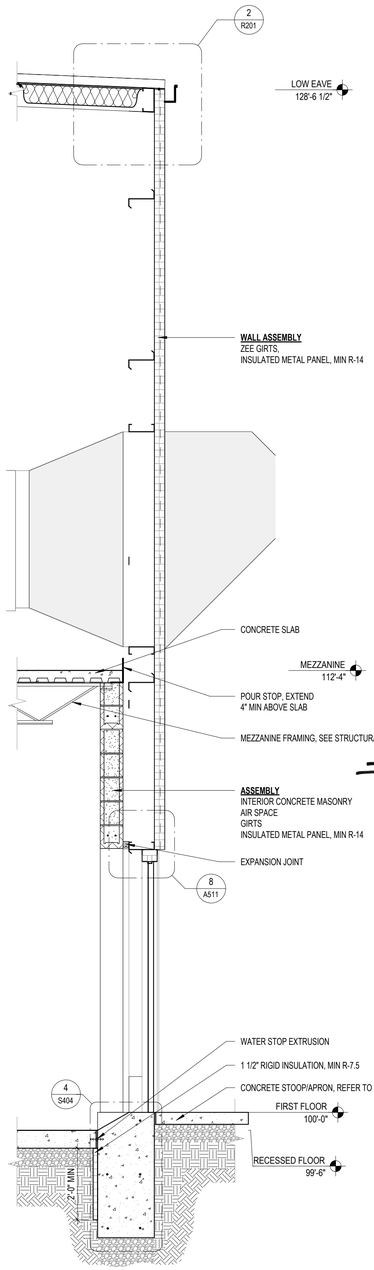

1 Wall Section
1/2" = 1'-0"

New Construction Work for :

Porter County Highway Department - Central Facility

1955 IN-2
Valparaiso, IN 46385

PORTER COUNTY Indiana

MARTIN RILEY
architects · engineers

221 West Baker Street
Fort Wayne, Indiana 46802
pho 260.422.7994
fax 260.426.2067

JACK E. DANIEL REGISTERED No. AR010026 STATE OF INDIANA

REVISION:		DATE:
1	ADDENDUM 3	2024-0619

DRAWN BY:	SAG	REVIEWED BY:	ALW
COMMISSION NUMBER:	F22146	DATE:	2024-05-24

A411

WALL SECTIONS - CENTRAL FACILITY

F22146 Porter County Highway Department - Central Facility
6/19/2024 3:17:23 PM
C:\Users\SGilly\Documents\F22146 - Porter Co Hwy Complex - Valpo - ARCH_sgilly.rvt
SD/DD/CD

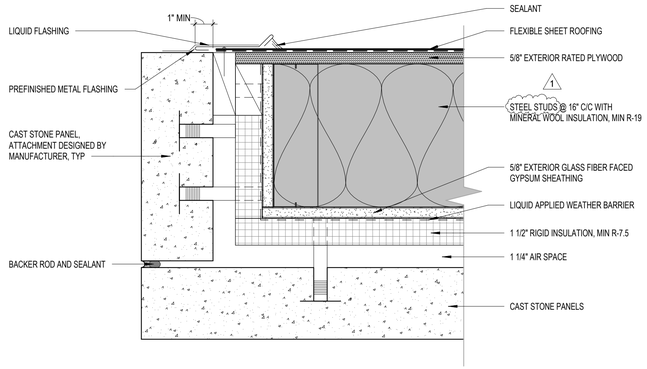

7 Cast Stone Parapet
3" = 1'-0"

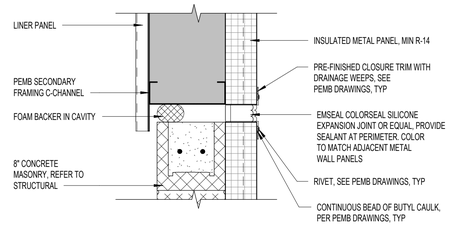

5 Expansion Joint Detail
1 1/2" = 1'-0"

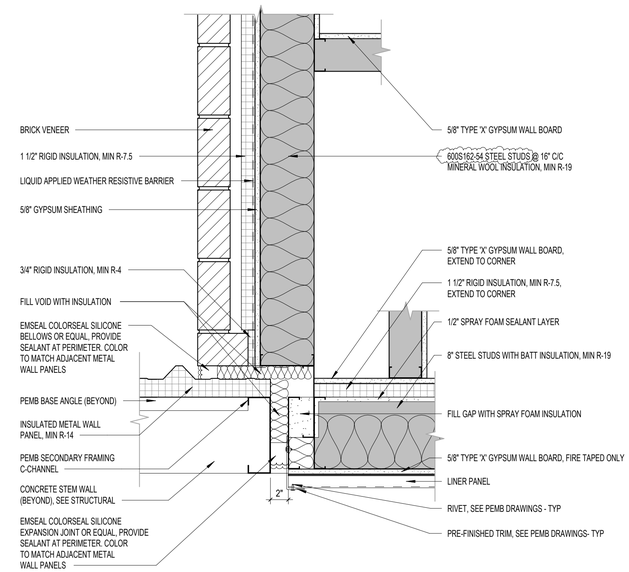

2 Expansion Joint Detail
1 1/2" = 1'-0"

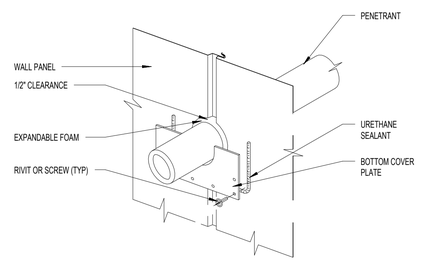

BOTTOM COVER PLATE INSTALLATION

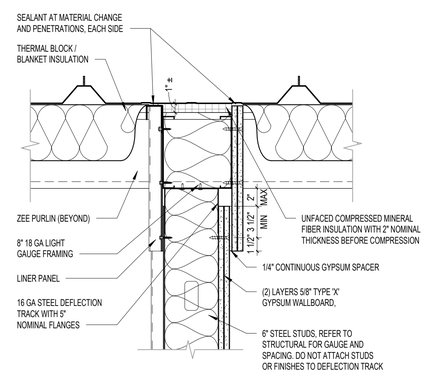

4 Wall Head Detail
1 1/2" = 1'-0"

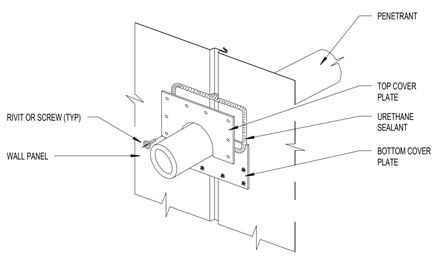

TOP COVER PLATE INSTALLATION

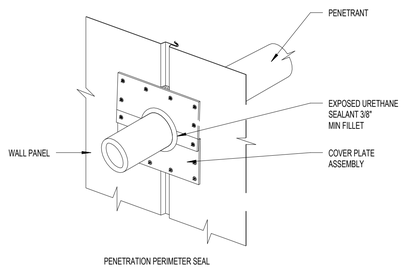

PENETRATION PERIMETER SEAL

6 Pipe Penetration - Flashing
3" = 1'-0"

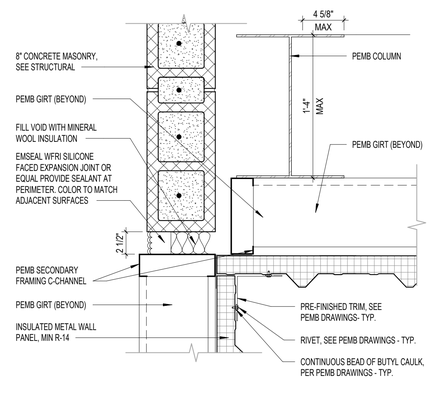

3 Expansion Joint Detail
1 1/2" = 1'-0"

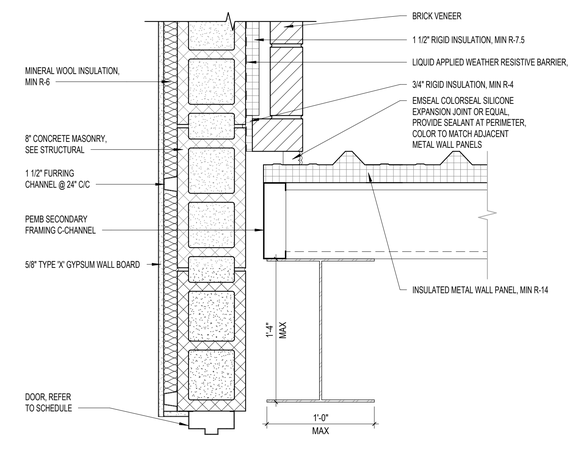

1 Expansion Joint Detail
1 1/2" = 1'-0"

New Construction Work for :

Porter County Highway Department - Central Facility

1955 IN-2
Valparaiso, IN 46385

PORTER COUNTY Indiana

MARTIN RILEY
architects • engineers

221 West Baker Street
Fort Wayne, Indiana 46802
pho 260.422.7994
fax 260.426.2067

JACK E. DANIEL REGISTERED No. AR010026 STATE OF INDIANA

REVISION:		DATE:
1	ADDENDUM 3	2024-0619

DRAWN BY:	SAG	REVIEWED BY:	ALW
COMMISSION NUMBER:	F22146	DATE:	2024-05-24

A502

DETAILS

F22146 Porter County Highway Department - Central Facility
6/19/2024 3:17:24 PM
C:\Users\Sgrilly\Documents\F22146 - Porter Co Hwy Complex - Valpo - ARCH_sgrilly.rvt
SD/DD/CD

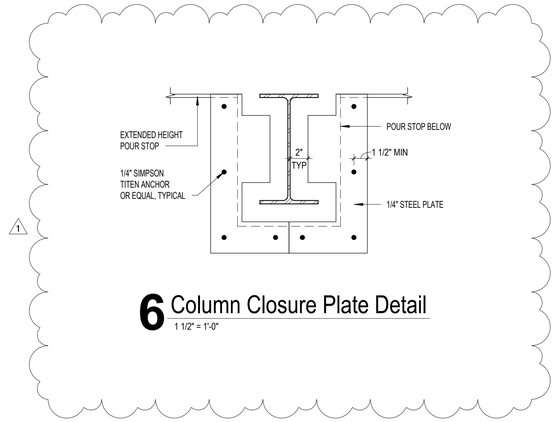

6 Column Closure Plate Detail
1 1/2" = 1'-0"

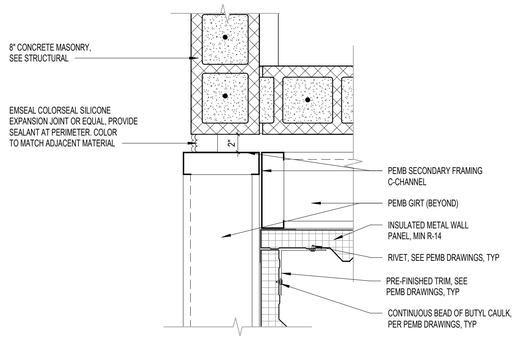

3 Expansion Joint Detail
1 1/2" = 1'-0"

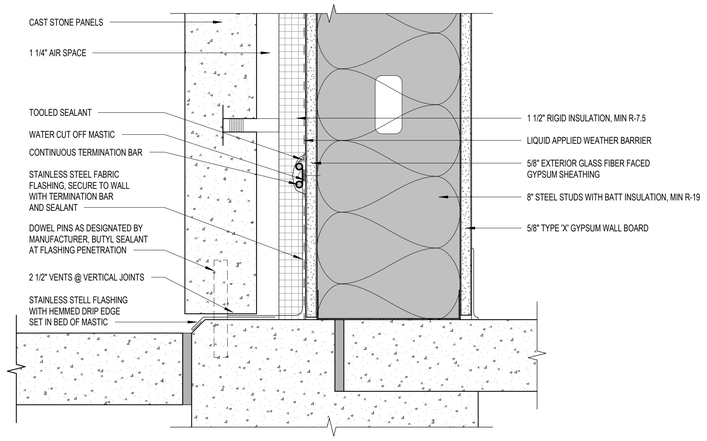

5 Cast Stone Sill Detail
3" = 1'-0"

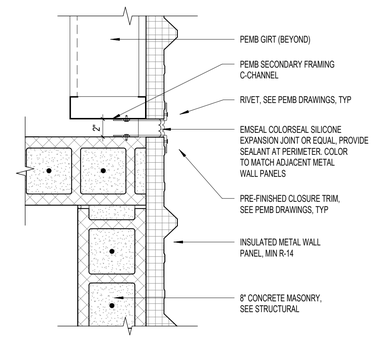

2 Expansion Joint Detail
1 1/2" = 1'-0"

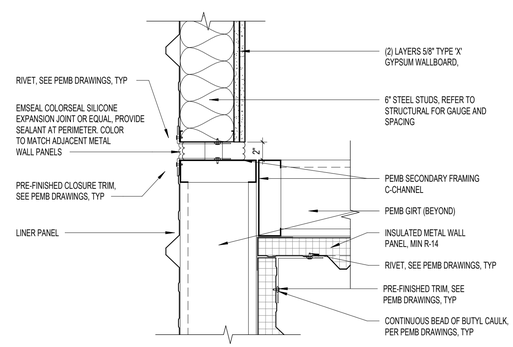

4 Expansion Joint Detail
1 1/2" = 1'-0"

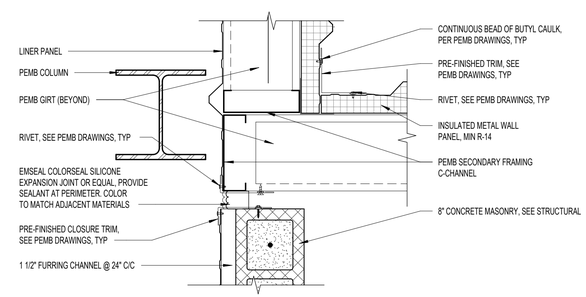

1 Expansion Joint Detail
1 1/2" = 1'-0"

New Construction Work for :

Porter County Highway Department - Central Facility

1955 IN-2
Valparaiso, IN 46385

PORTER COUNTY Indiana

MARTIN RILEY
architects • engineers

221 West Baker Street
Fort Wayne, Indiana 46802
pho 260.422.7994
fax 260.426.2067

JACK E. DANIEL III REGISTERED No. AR010026 STATE OF INDIANA

REVISION:		DATE:
1	ADDENDUM 3	2024-0619

DRAWN BY: SAG
REVIEWED BY: ALW
COMMISSION NUMBER: F22146
DATE: 2024-05-24

A504

DETAILS

F22146 Porter County Highway Department - Central Facility
6/19/2024 3:17:25 PM
C:\Users\Scrilly\Documents\F22146 - Porter Co Hwy Complex - Valpo - ARCH_sgrilly.rvt
SD/DD/CD

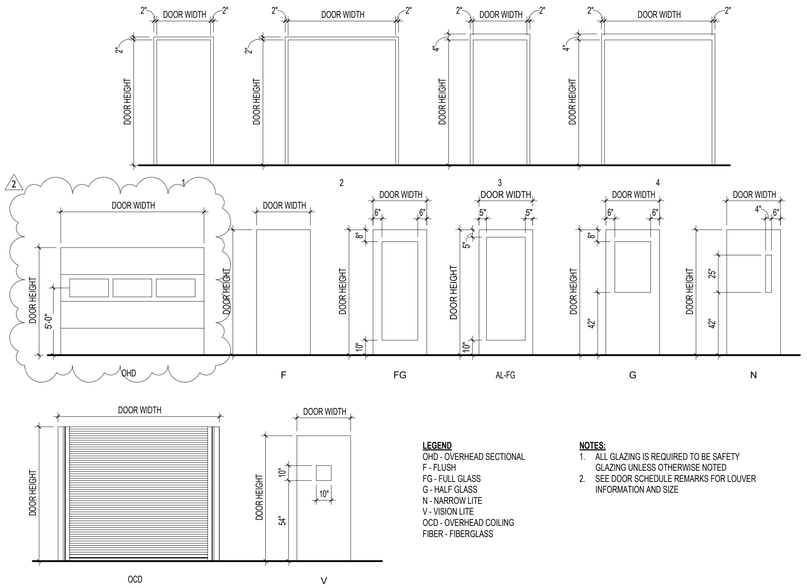

LEGEND
OHD - OVERHEAD SECTIONAL
F - FLUSH
FG - FULL GLASS
G - HALF GLASS
N - NARROW LITE
V - VISION LITE
OCD - OVERHEAD COILING
FIBER - FIBERGLASS

NOTES:
1. ALL GLAZING IS REQUIRED TO BE SAFETY GLAZING UNLESS OTHERWISE NOTED
2. SEE DOOR SCHEDULE REMARKS FOR LOUVER INFORMATION AND SIZE

Hardware Sets

#01.01
DOORS: 113A, 114A, 116A 117A

3	HINGES	5BB1 4 1/2 X 4 1/2	652	IV
1	LEVERSET	ND10 RHO 10-025	626	SC
1	PROTECTION PLATE	8400 8" X 34" B-CS	US32D	IV
1	WALL STOP	WS406/407CCV	US32D	IV

#02.01
DOORS: 123B,124B

3	HINGES	5BB1 4 1/2 X 4 1/2	652	IV
1	LEVERSET	ND40 RHO 10-025	626	SC
1	PROTECTION PLATE	8400 8" X 34" B-CS	US32D	IV
1	WALL STOP	WS406/407CCV	US32D	IV

#02.02
DOORS: 133A

3	HINGES	5BB1 4 1/2 x 4 1/2	652	IV
1	LEVERSET	ND40 RHO 10-025	626	SC
1	CLOSER	4040XP REGARM	AL	LC
1	WALL STOP	WS406/407CCV	US32D	IV

#02.03
DOORS: 107A, 108A

3	HINGES	5BB1 4 1/2 x 4 1/2	652	IV
1	LEVERSET	ND40 RHO 10-025	626	SC
1	CLOSER	4040XP REGARM	AL	LC
1	PROTECTION PLATE	8400 8" X 34" B-CS	US32D	IV
1	WALL STOP	WS406/407CCV	US32D	IV

#03.01
DOORS: 104A, 105A, 106A, 109A, 125A

3	HINGES	5BB1 4 1/2 x 4 1/2	652	IV
1	LOCKSET	ND53P RHO 10-025	626	SC
1	WALL STOP	WS406/407CCV	US32D	IV

#03.02
DOORS: 135A

3	HINGES	5BB1 4 1/2 x 4 1/2	652	IV
1	LOCKSET	ND53P RHO 10-025	626	SC
1	WALL STOP	WS406/407CCV	US32D	IV

#03.03
DOORS: 122A

3	HINGES	5BB1 4 1/2 x 4 1/2	652	IV
1	LOCKSET	ND53P RHO 10-025	626	SC
1	CLOSER	4040XP RWPA	AL	LC
1	PROTECTION PLATE	8400 8" X 34" B-CS	US32D	IV
1	WALL STOP	WS406/407CCV	US32D	IV

#03.04
DOORS: 125B

3	HINGES	5BB1 4 1/2 x 4 1/2	652	IV
1	LOCKSET	ND53P RHO 10-025	626	SC
1	CLOSER	4040XP RW62A	AL	LC
1	OVERHEAD STOP	904S	US32D	GL
1	GASKETING	2525 B-20 20'		NA
1	AUTO DOOR BOTTOM	420 NA 36"		NA

#03.05
DOORS: 134C, 150I

1	CONTINUOUS HINGE	112HD 83"	628	IV
1	LOCKSET	ND53P RHO 10-025	626	SC
1	CLOSER	1461 RW62A	AL	LC
1	OVERHEAD STOP	904S	US32D	GL

#04.01
DOORS: 115A, 118A, 121A

3	HINGES	5BB1 4 1/2 x 4 1/2	652	IV
1	LOCKSET	ND70P RHO 10-025	626	SC
1	PROTECTION PLATE	8400 8" X 34" B-CS	US32D	IV
1	WALL STOP	WS406/407CCV	US32D	IV

#04.02
DOORS: 109B

3	HINGES	5BB1 4 1/2 x 4 1/2	652	IV
1	LOCKSET	ND70P RHO 10-025	626	SC
1	CLOSER	4040XP REGRAM	AL	LC
1	WALL STOP	WS406/407CCV	US32D	IV
1	GASKETING	160 VA 1 x 36" 2 x 84"		NA
1	AUTO DOOR BOTTOM	420 NA 36"		NA

#04.04
DOORS: 122B

3	HINGES	5BB1 4 1/2 X 4 1/2	652	IV
1	LOCKSET	ND70P RHO 10-025	626	SC
1	CLOSER	4040XP RW62A	AL	LC
1	OVERHEAD STOP	904S	US32D	GL
1	GASKETING	2525 B-20 20'		NA
1	AUTO DOOR BOTTOM	420 NA 36"		NA

#04.05
DOORS: 130R, 130S, 130T

3	HINGES	5BB1 4 1/2 X 4 1/2	652	IV
1	LOCKSET	ND70P RHO 10-025	626	SC
1	CLOSER	1461 RW62A	AL	LC
1	OVERHEAD STOP	904S	US32D	GL
1	GASKETING	160 VA 1 x 36" 2 x 84"		NA
1	AUTO DOOR BOTTOM	420 NA 36"		NA

#04.06
DOORS: 132A, 134A

3	HINGES	5BB1 4 1/2 X 4 1/2	652	IV
1	LOCKSET	ND70P RHO 10-025	626	SC
1	CLOSER	4040XP REGRAM	AL	LC
1	WALL STOP	WS406/407CCV	US32D	IV
1	GASKETING	2525 B-20 20'		NA

#04.07
DOORS: 137C, 137D

2	CONTINUOUS HINGE	112HD 83"	628	IV
2	FLUSH BOLT	FB458	US26D	IV
1	STRIKE	DP1	US26D	IV
1	LOCKSET	ND70P RHO 10-025	626	SC
1	OVERHEAD STOP	904S	US32D	GL
1	WALL STOP	WS406/407CCV	US32D	IV

*NOTE: WALL STOP TO BE USED WHERE DOOR IS ABLE TO FULLY SWING TO WALL.. OVERHEAD STOP AT OTHER LEAF

#05.02
DOORS: 204A

3	HINGES	5BB1 4 1/2 x 4 1/2	652	IV
1	LOCKSET	ND80P RHO 10-025	626	SC
1	CLOSER	4040XP REGARM	AL	LC
1	WALL STOP	WS406/407CCV	US32D	IV

#05.04
DOORS: 141A,142A

3	HINGES	5BB1 4 1/2 x 4 1/2	652	IV
1	LOCKSET	ND80P RHO 10-025	626	SC
1	CLOSER	1461 RW62A	AL	LC
1	OVERHEAD STOP	904S	US32D	GL

#05.05
DOORS: 136B

1	CONTINUOUS HINGE	112HD 83"	628	IV
1	LOCKSET	ND80P RHO 10-025	626	SC
1	CLOSER	4040XP RW62A	AL	LC
1	OVERHEAD STOP	906S	US32D	GL
1	GASKETING	160 V 1 x 48" 2 x 84"		NA
1	DRIP CAP	16 A 52"		NA
1	DOOR SWEEP	D698 A 48"		NA
1	THRESHOLD	896 V 48"	AL	NA

#05.06
DOORS: 136A

6	HINGES	5BB1 4 1/2 x 4 1/2	652	IV
1	FLUSH BOLT KIT	FB32	US32D	IV
1	LOCKSET	ND86P RHO 10-025	626	SC
1	DOOR COORDINATOR	COR52 2-MB2 SP28 FL20	US28	IV

*NOTE: VERIFY MOUNTING BRACKET (MB2) REQUIREMENTS BASED ON FRAME JAMB DEPTH

2	CLOSER	1461 RW62A	AL	LC
2	OVERHEAD STOP	904S	US32D	GL
1	GASKETING	2525 B-25 25'		NA
2	AUTO DOOR BOTTOM	420 NA 36"		NA

*NOTE SEE RFI QUESTION REGARDING SURFACE AUTO DOOR BOTTOMS

#06.01
DOORS: 123A, 124A

3	HINGES	5BB1 4 1/2 X 4 1/2	652	IV
1	PUSH PLATE	8200 4 x 16 B-CS	US32D	IV
1	PULL PLATE	8302-0 4 x 16	US32D	IV
1	CLOSER	4040XP REGARM	AL	LC
1	PROTECTION PLATE	8400 8" X 34" B-CS	US32D	IV
1	WALL STOP	WS406/407CCV	US32D	IV

#07.01
DOORS: 120A, 120B

3	HINGES	5BB1 4 1/2 x 4 1/2	652	IV
1	EXIT DEVICE	99L x 996L-R&V	US26D	VO
1	RIM CYLINDER	20-022	626	SC
1	CLOSER	4040XP HWPA	AL	LC
1	OVERHEAD STOP	104S	US32D	GL
1	PROTECTION PLATE	8400 8" X 34" B-CS	US32D	IV

#07.02
DOORS: 130A, 130G, 130P, 140C,

1	CONTINUOUS HINGE	112HD 83"	628	IV
1	EXIT DEVICE	CD 99NL-OP x 110MD-NL	US26D	VO
1	RIM CYLINDER	20-022	626	SC
1	MORTISE CYLINDER	20-001 1 1/4"	626	SC
1	CLOSER	4040XP RW62A	AL	LC
1	OVERHEAD STOP	904S	US32D	GL
1	GASKETING	160 VA 1 x 36" 2 x 84"		NA
1	DRIP CAP	16 A 40"		NA
1	DOOR SWEEP	D698 A 36"		NA
1	THRESHOLD	896 V 36"	AL	NA

#08.01
DOORS: 130B, 130C, 130D, 130E, 130F, 130I, 130J, 130K, 130L, 130M, 132B, 134D,137B, 140B, 140E, 150A, 150C, 150G, 160B, AND FLUIDS ACCESS DOOR

1	MORTISE CYLINDER	20-001 1 1/8"	626	SC

*NOTE: VERIFY CYLINDER REQUIREMENTS WITH DOOR SUPPLIER PRIOR TO ORDERING

#09.01
DOORS: 132C

1	CONTINUOUS HINGE	112HD 83"	628	IV
1	LOCKSET	ND60P RHO 10-025	626	SC
1	CLOSER	4040XP RW62A	AL	LC
1	OVERHEAD STOP	906S	US32D	GL
1	GASKETING	160 V 1 x 48" 2 x 84"		NA
1	DRIP CAP	16 A 52"		NA
1	DOOR SWEEP	D698 A 48"		NA
1	THRESHOLD	896 V 48"	AL	NA

#09.02
DOORS: 134B, 137A, 144A, 150B, 150D, 150E, 160A, 201A

1	CONTINUOUS HINGE	112HD 83"	628	IV
1	LOCKSET	ND60P RHO 10-025	626	SC
1	CLOSER	4040XP RW62A	AL	LC
1	OVERHEAD STOP	904S	US32D	GL
1	GASKETING	2525 B-20 20'		NA
1	GASKETING	160 V 1 x 48" 2 x 84"		NA
1	DRIP CAP	16 A 40"		NA
1	DOOR SWEEP	D698 A 36"		NA
1	THRESHOLD	896 V 36"	AL	NA

#10.01
DOORS: 101A

1	CONTINUOUS HINGE	112HD 95" CUSTOM CUT	628	IV
1	EXIT DEVICE	CD 99NL-OP x 110MD-NL	US26D	VO
1	RIM CYLINDER	20-022	626	SC
1	MORTISE CYLINDER	20-001 1 1/4"	626	SC
1	DOOR PULL	8190EZHD-2	US32D316	IV
1	CLOSER	4040XP RWPA	AL	LC
1	OVERHEAD STOP	104S	US32D	GL
1	DOOR SWEEP	D698 A 36"		NA
1	THRESHOLD	896 V 36"	AL	NA

*NOTE: PERIMETER SEAL BY DOOR SUPPLIER

#10.02
DOORS: 102A

1	CONTINUOUS HINGE	112HD 85"	628	IV
1	EXIT DEVICE	CD 99NL-OP x 110MD-NL	US26D	VO
1	RIM CYLINDER	20-022	626	SC
1	MORTISE CYLINDER	20-001 1 1/4"	626	SC
1	DOOR PULL	8190EZHD-2	US32D316	IV
1	CLOSER	4040XP RWPA	AL	LC
1	OVERHEAD STOP	104S	US32D	GL
1	DOOR SWEEP	D698 A 36"		NA
1	THRESHOLD	896 V 36"	AL	NA

*NOTE: PERIMETER SEAL BY DOOR SUPPLIER

Door & Frame Schedule

		Door					Frame						
				Size (Each Leaf)									
Door Number	Leaf Count	Material	Elevation	Width	Height	Thickness	Material	Elevation	Door Head	Door Jamb	Rating	Hardware	Remarks
101A	1	AL	A/A520	3' - 0"	7' - 10"	0' - 1 3/4"	AL	A/A520				10.01	2
101B	1	AL	AL-FG	3' - 0"	7' - 0"	0' - 1 3/4"	AL	1				EL 10.01	
102A	1	AL	AL-FG	3' - 0"	7' - 2"	0' - 1 3/4"	AL	1				10.02	2
104A	1	WD	N	3' - 0"	7' - 0"	0' - 1 3/4"	HM	1				03.01	
105A	1	WD	N	3' - 0"	7' - 0"	0' - 1 3/4"	HM	1				03.01	
106A	1	WD	N	3' - 0"	7' - 0"	0' - 1 3/4"	HM	1				03.01	
107A	1	WD	F	3' - 0"	7' - 0"	0' - 1 3/4"	HM	1				02.03	
108A	1	WD	F	3' - 0"	7' - 0"	0' - 1 3/4"	HM	1				02.03	
109A	1	WD	N	3' - 0"	7' - 0"	0' - 1 3/4"	HM	1				03.01	
109B	1	HM	G	3' - 0"	7' - 0"	0' - 1 3/4"	HM	3				04.02	
113A	1	WD	N	3' - 0"	7' - 0"	0' - 1 3/4"	HM	1				01.01	
114A	1	WD	N	3' - 0"	7' - 0"	0' - 1 3/4"	HM	1				01.01	
115A	1	WD	F	3' - 0"	7' - 0"	0' - 1 3/4"	HM	1				04.01	
116A	1	WD	F	3' - 0"	7' - 0"	0' - 1 3/4"	HM	1				01.01	
117A	1	WD	F	3' - 0"	7' - 0"	0' - 1 3/4"	HM	1				01.01	
118A	1	WD	F	3' - 0"	7' - 0"	0' - 1 3/4"	HM	1				04.01	
119A	1	HM	F	3' - 0"	7' - 0"	0' - 1 3/4"	HM	1				EL 05.02	
120A	1	WD	N	3' - 0"	7' - 0"	0' - 1 3/4"	HM	1				07.01	
120B	1	WD	N	3' - 0"	7' - 0"	0' - 1 3/4"	HM	1				07.01	
121A	1	WD	F	3' - 0"	7' - 0"	0' - 1 3/4"	HM	1				04.01	
122A	1	WD	G	3' - 0"	7' - 0"	0' - 1 3/4"	HM	1				03.03	
122B	1	HM	N	3' - 0"	7' - 0"	0' - 1 3/4"	HM	3			45 MIN	04.04	1
123A	1	WD	F	3' - 0"	7' - 0"	0' - 1 3/4"	HM	1				06.01	
123B	1	WD	F	3' - 0"	7' - 0"	0' - 1 3/4"	HM	1				02.01	
124A	1	WD	F	3' - 0"	7' - 0"	0' - 1 3/4"	HM	1				06.01	
124B	1	WD	F	3' - 0"	7' - 0"	0' - 1 3/4"	HM	1				02.01	
125A	1	WD	N	3' - 0"	7' - 0"	0' - 1 3/4"	HM	1				03.01	
125B	1	HM	N	3' - 0"	7' - 0"	0' - 1 3/4"	HM	3			45 MIN	03.04	1
130A	1	HM	N	3' - 0"	7' - 0"	0' - 1 3/4"	HM	1				07.02	
130B	1	STL	OHD	16' - 0"	16' - 0"	0' - 2"	STL	-				08.01	
130C	1	STL	OHD	16' - 0"	16' - 0"	0' - 2"	STL	-				08.01	
130D	1	STL	OHD	16' - 0"	16' - 0"	0' - 2"	STL	-				08.01	
130E	1	STL	OHD	16' - 0"	16' - 0"	0' - 2"	STL	-				08.01	
130F	1	STL	OHD	16' - 0"	16' - 0"	0' - 2"	STL	-				08.01	
130G	1	HM	N	3' - 0"	7' - 0"	0' - 1 3/4"	HM	1				07.02	
130H	1	HM	N	3' - 0"	7' - 0"	0' - 1 3/4"	HM	1				EL 07.01	
130I	1	STL	OHD	16' - 0"	16' - 0"	0' - 2"	STL	-				08.01	
130J	1	STL	OHD	16' - 0"	16' - 0"	0' - 2"	STL	-				08.01	
130K	1	STL	OHD	16' - 0"	16' - 0"	0' - 2"	STL	-				08.01	
130L	1	STL	OHD	16' - 0"	16' - 0"	0' - 2"	STL	-				08.01	
130M	1	STL	OHD	16' - 0"	16' - 0"	0' - 2"	STL	-				08.01	
130P	1	HM	N	3' - 0"	7' - 0"	0' - 1 3/4"	HM	1				07.02	
130R	1	HM	N	3' - 0"	7' - 0"	0' - 1 3/4"	HM	3				04.05	1
130S	1	HM	N	3' - 0"	7' - 0"	0' - 1 3/4"	HM	3				04.05	1
130T	1	HM	N	3' - 0"	7' - 0"	0' - 1 3/4"	HM	3				04.05	1
132A	1	HM	N	3' - 0"	7' - 0"	0' - 1 3/4"	HM	3			45 MIN	04.06	1
132B	1	STL	OCD	8' - 0"	10' - 0"	0' - 0"	-	-	PER MFG	PER MFG	45 MIN	08.01	
132C	1	HM	F	4' - 0"	7' - 0"	0' - 1 3/4"	HM	1				09.01	
133A	1	HM	F	3' - 0"	7' - 0"	0' - 1 3/4"	HM	3			45 MIN	02.02	
134A	1	HM	F	3' - 0"	7' - 0"	0' - 1 3/4"	HM	3			45 MIN	04.06	
134B	1	HM	F	3' - 0"	7' - 0"	0' - 1 3/4"	HM	1				09.02	
134C	1	FIBER	N	3' - 0"	7' - 0"	0' - 1 3/4"	FBR	3				03.05	
134D	1	STL	OHD	16' - 0"	16' - 0"	0' - 2"	STL	-				08.01	
134E	1	HM	N	3' - 0"	7' - 0"	0' - 1 3/4"	HM	1				EL 07.01	
135A	1	HM	N	3' - 0"	7' - 0"	0' - 1 3/4"	HM	1				03.02	
136A	2	HM	F	3' - 0"	7' - 0"	0' - 1 3/4"	HM	4			45 MIN	05.06	1
136B	1	HM	F	4' - 0"	7' - 0"	0' - 1 3/4"	HM	3				05.05	
137A	1	FIBER	N	3' - 0"	7' - 0"	0' - 1 3/4"	FBR	3				09.02	
137B	1	STL	OHD	16' - 0"	16' - 0"	0' - 2"	STL	-				08.01	
137C	2	FIBER	F	3' - 0"	7' - 0"	0' - 1 3/4"	FIBER	4				04.07	
137D	2	FIBER	F	3' - 0"	7' - 0"	0' - 1 3/4"	FIBER	4				04.07	
140A	1	HM	F	3' - 0"	7' - 0"	0' - 1 3/4"	HM	1				EL 07.01	
140B	1	STL	OHD	16' - 0"	16' - 0"	0' - 2"	STL	-				08.01	
140C	1	HM	F	3' - 0"	7' - 0"	0' - 1 3/4"	HM	1				07.02	
140D	1	HM	N	3' - 0"	7' - 0"	0' - 1 3/4"	HM	1				EL 07.01	
140E	1	STL	OHD	16' - 0"	16' - 0"	0' - 2"	STL	-				08.01	
141A	1	HM	F	3' - 0"	7' - 0"	0' - 1 3/4"	HM	3				05.04	
142A	1	HM	F	3' - 0"	7' - 0"	0' - 1 3/4"	HM	3				05.04	
150A		STL	OHD	16' - 0"	16' - 0"	0' - 2"	STL	-				08.01	
150B	1	HM	F	3' - 0"	7' - 0"	0' - 1 3/4"	HM	1				09.02	
150C		STL	OHD	16' - 0"	16' - 0"	0' - 2"	STL					08.01	
150D	1	HM	F	3' - 0"	7' - 0"	0' - 1 3/4"	HM	1				09.02	
150E	1	HM	F	3' - 0"	7' - 0"	0' - 1 3/4"	HM	1				09.02	
150G		STL	OHD	16' - 0"	16' - 0"	0' - 2"	STL	-				08.01	
160A	1	FIBER	F	3' - 0"	7' - 0"	0' - 1 3/4"	FIBER	1				09.02	
160B	1	STL	OCD	20' - 0"	24' - 0"	0' - 0"	-	-	PER MFG	PER MFG		08.01	
201A	1	HM	F	3' - 0"	7' - 0"	0' - 1 3/4"	HM	1			45 MIN	09.02	
204A	1	HM	F	3' - 0"	7' - 0"	0' - 1 3/4"	HM	1				05.02	

REMARKS

1. INSULATED
2. THERMALLY BROKEN
3.

GENERAL NOTES

1. PAINT HOLLOW METAL DOOR, FRAMES AND HOLLOW METAL WINDOW FRAMES IN ALL ROOMS WHERE WORK IS BEING PERFORMED
2. PROVIDE SEALANT BETWEEN DOOR FRAMES AND ADJACENT SURFACE, PAINT OR COLOR TO MATCH
3. FIELD VERIFY ALL EXISTING CONDITIONS
4. PROVIDE STEEL LINTELS AND INFILL MASONRY AS REQUIRED FOR NEW OPENINGS AND OPENING MODIFICATIONS, SEE STRUCTURAL
5. PROVIDE DOOR SILENCERS AT NEW AND EXISTING DOOR LOCATIONS SCHEDULED
6. FILL AND SAND ANY HOLES IN HOLLOW METAL DOORS AND FRAMES
7. PROVIDE BLANK TRIMS FOR DOORS AS REQUIRED
8. PROVIDE DOOR SIGNAGE IN AREAS OF WORK, REFER TO DETAILS AND SPECIFICATION
9. PROVIDE ADDITIONAL SECONDARY FRAMING AS REQUIRED FOR DOOR LOCATIONS IN PRE-ENGINEERING BUILDINGS
10. PROVIDE ADDITIONAL TRIMS AS REQUIRED TO COVER PEMB FRAMING AT OVERHEAD DOOR LOCATIONS

#EL 05.02
DOORS: 119A

3	HINGES	5BB1 4 1/2 x 4 1/2	652	IV
1	LOCKSET	ND80P RHO 10-025	626	SC
1	ELECTRIC STRIKE	6211	US32D	VO
1	CLOSER	4040XP RWPA	AL	LC
1	WALL STOP	WS406/407CCV	US32D	IV
1	POWER SUPPLY	PS902		VO

* NOTE: CREDENTIAL READER BY DIVISION 28 SUPPLIER.
OPERATION: INGRESS BY CARD READER OR KEY. FREE EGRESS AT ALL TIMES

#EL 07.01
DOORS: 130H, 134E, 140A, 140D

1	CONTINUOUS HINGE	112HD 83" EPT	628	IV
1	EXIT DEVICE	SD-QEL 99NL x 990NL-R&V	US26D	VO
1	RIM CYLINDER	20-022	626	SC
1	MORTISE CYLINDER	20-001 1 1/4"	626	SC
1	CLOSER	4040XP RW62A	AL	LC
1	OVERHEAD STOP	904S	US32D	GL
1	ELECTRIC POWER TRANSFER	EPT 10	SP28	VO
1	POWER SUPPLY	PS902		VO
1	GASKETING	160 VA 1 x 36" 2 x 84"		NA
1	DRIP CAP	16 A 40"		NA
1	DOOR SWEEP	D698 A 36"		NA
1	THRESHOLD	896 V 36"	AL	NA

* NOTE: CREDENTIAL READER BY DIVISION 28 SUPPLIER.
OPERATION: INGRESS BY CARD READER OR KEY. FREE EGRESS AT ALL TIMES

#EL 10.01
DOORS: 101B

1	CONTINUOUS HINGE	112HD 83" EPT	628	IV
1	EXIT DEVICE	QEL 99NL-OP x 110MD-NL	US26D	VO
1	RIM CYLINDER	20-022	626	SC
1	DOOR PULL	8190EZHD-2	US32D316	IV
1	CLOSER	4040XP RWPA	AL	LC
1	WALL STOP	WS406/407CCV	US32D	IV
1	ELECTRIC POWER TRANSFER	EPT 10	SP28	VO
1	POWER SUPPLY	PS902		VO

New Construction Work for :
Porter County Highway Department - Central Facility
1955 IN-2
Valparaiso, IN 46385

PORTER COUNTY Indiana

MARTIN RILEY
architects·engineers
221 West Baker Street
Fort Wayne, Indiana 46802
pho 260.422.7994
fax 260.426.2067

JACK E. DAVIS REGISTERED No. AR010026 STATE OF INDIANA

REVISION:		DATE:
1	ADDENDUM 1	2024-06-12
2	ADDENDUM 3	2024-0619

DRAWN BY: SAG
REVIEWED BY: ALW
COMMISSION NUMBER: F22146
DATE: 2024-05-24

A510

DOOR SCHEDULE AND DETAILS

F22146 Porter County Highway Department - Central Facility
6/19/2024 3:17:27 PM
C:\Users\SGrilly\Documents\F22146 - Porter Co Hwy Complex - Valpo - ARCH_sgrilly.rvt
SD/DD/CD

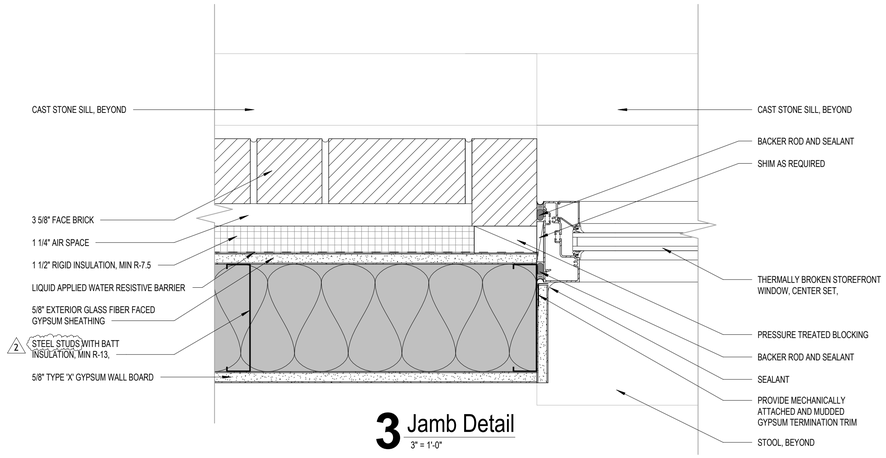

3 Jamb Detail
3" = 1'-0"

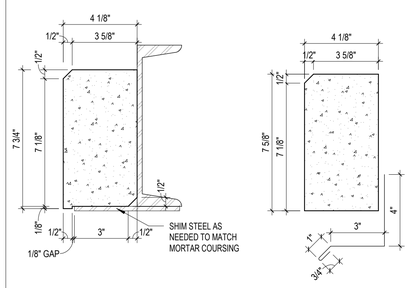

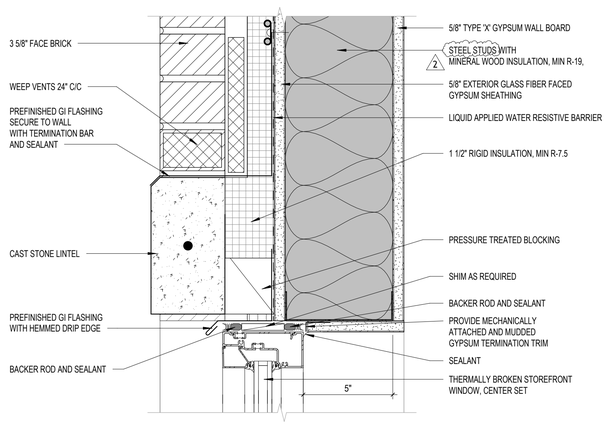

2 Head Detail
3" = 1'-0"

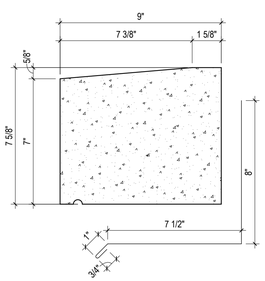

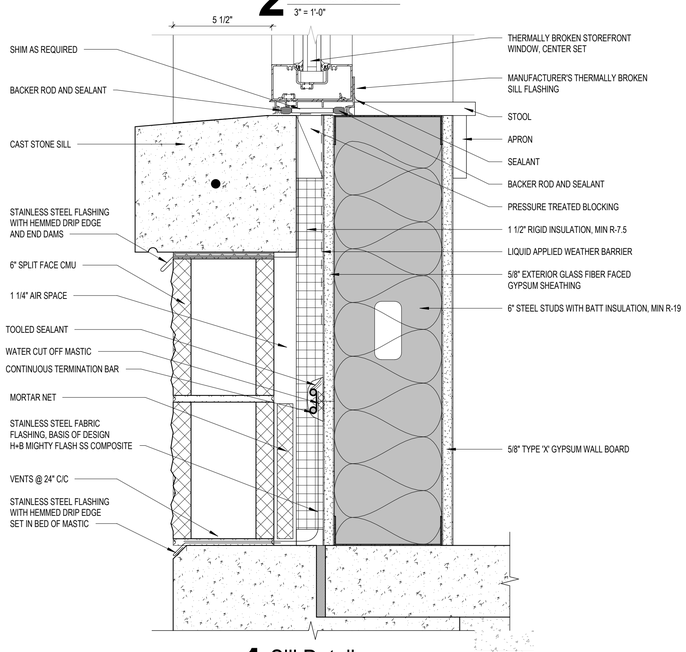

1 Sill Detail
3" = 1'-0"

F22146 Porter County Highway Department - Central Facility
6/19/2024 3:17:30 PM
C:\Users\Scally\Documents\F22146 - Porter Co Hwy Complex - Valpo - ARCH_sgrilly.rvt
SD/DD/CD

Window Schedule

Mark	Rough Opening Width	Rough Opening Height	Material	Glass	Sill Height	Sill	Jamb	Head	Comments
B	2' - 8"	6' - 0"	AL	1" LOW-E	2' - 0"	1/A520	3/A520	2/A520	
E	2' - 8"	4' - 0"	AL	1"	3' - 4"	1/A521	3/A521	2/A521	
I	3' - 4"	4' - 0"	AL	CLEAR	2' - 10"				

GENERAL NOTES:
1. PROVIDE ANY AND ALL TRIM PIECES AND COMPONENTS REQUIRED FOR WEATHER TIGHT AND AESTHETICALLY COMPLETE WINDOW SYSTEM

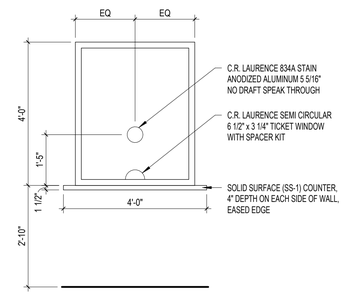

I Transaction Window
1/2" = 1'-0"

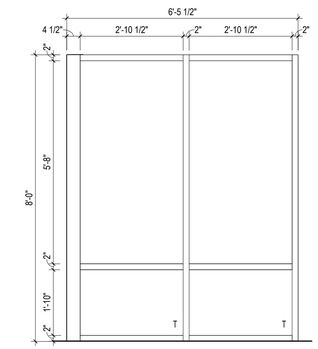

G Storefront
1/2" = 1'-0"

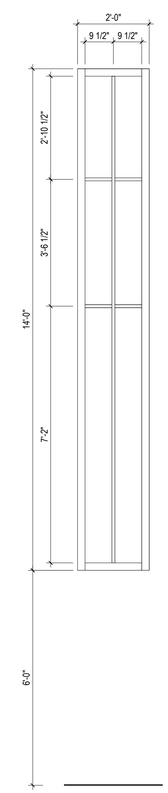

C Translucent Wall System
1/2" = 1'-0"

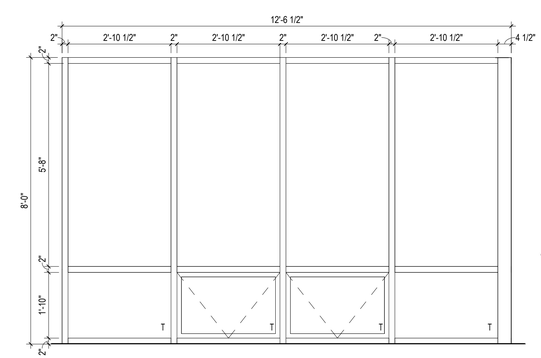

D Storefront
1/2" = 1'-0"

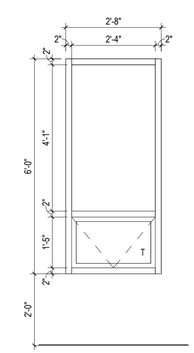

B Storefront
1/2" = 1'-0"

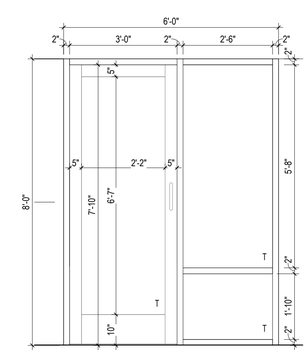

A Storefront
1/2" = 1'-0"

New Construction Work for :

Porter County Highway Department - Central Facility

1955 IN-2
Valparaiso, IN 46385

PORTER COUNTY Indiana

MARTIN RILEY
architects · engineers

221 West Baker Street
Fort Wayne, Indiana 46802

pho 260.422.7994
fax 260.426.2067

JACK E. DANIEL REGISTERED No. AR010026 STATE OF INDIANA

REVISION:		DATE:
1	ADDENDUM 1	2024-06-12
2	ADDENDUM 3	2024-0619

DRAWN BY: SAG
REVIEWED BY: ALW
COMMISSION NUMBER: F22146
DATE: 2024-05-24

A520

WINDOW SCHEDULE AND DETAILS

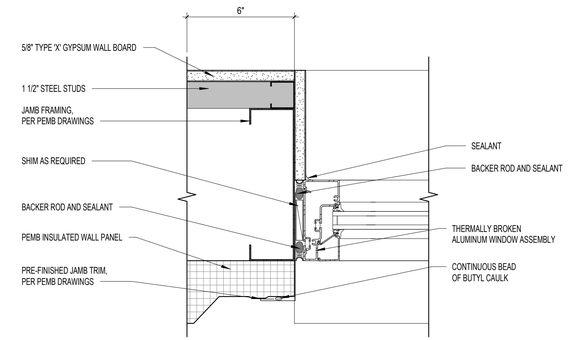

3 Jamb Detail
3" = 1'-0"

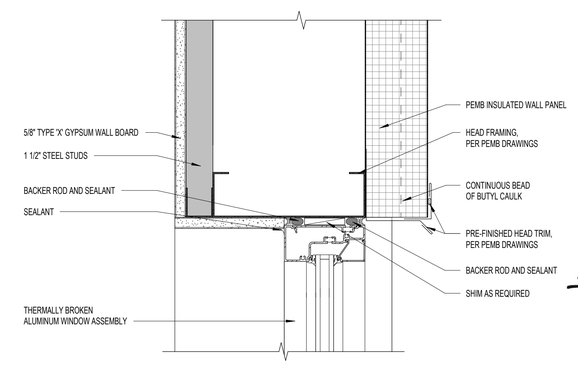

2 Head Detail
3" = 1'-0"

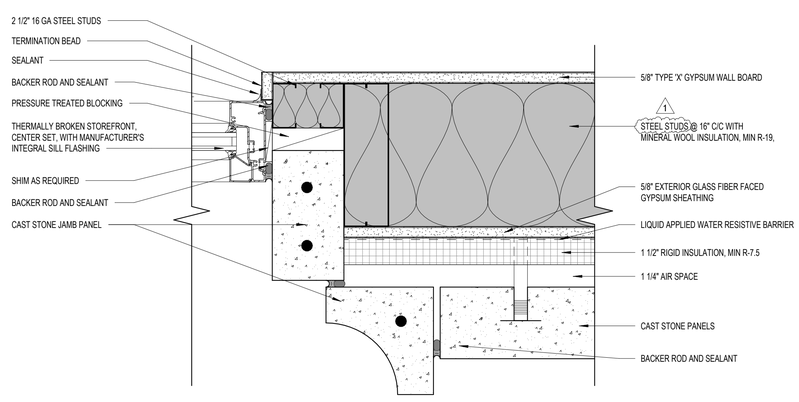

4 Jamb Detail
3" = 1'-0"

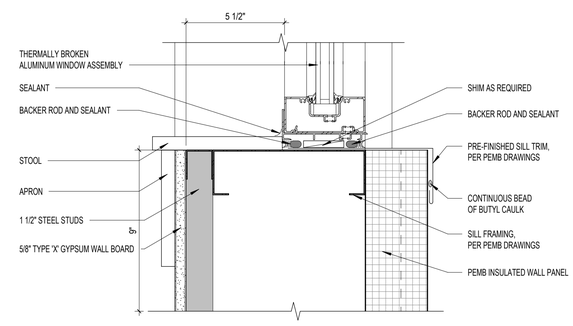

1 Sill Detail
3" = 1'-0"

New Construction Work for :

Porter County Highway Department - Central Facility

1955 IN-2
Valparaiso, IN 46385

PORTER COUNTY Indiana

MARTINRILEY
architects • engineers

221 West Baker Street
Fort Wayne, Indiana 46802
pho 260.422.7994
fax 260.426.2067

JACK E. DANIEL REGISTERED No. AR010026 STATE OF INDIANA

REVISION:		DATE:
1	ADDENDUM 3	2024-0619

DRAWN BY:	SAG	REVIEWED BY:	ALW
COMMISSION NUMBER:	F22146	DATE:	2024-05-24

A521

WINDOW DETAILS

F22146 - Porter County Highway Department - Central Facility
6/19/2024 3:17:31 PM
C:\Users\SGilly\Documents\F22146 - Porter Co Hwy Complex - Valpo - ARCH_sgilly.rvt
SD/DD/CD

Work Description Notes

1. WIRE INDOOR UNIT TO OUTDOOR UNIT WITH 2-#12, 1-#12G IN 3/4"C.
2. CAMERA TO BE LOCATED HERE IF COLD STORAGE BLDG ALTERNATE IS NOT TAKEN
3. POWER FOR DOOR ACCESS; SEE 7/E501 FOR DETAIL
4. RUN 4-#14, 1-#14G IN 3/4"C FORM LOUVER TO STARTER

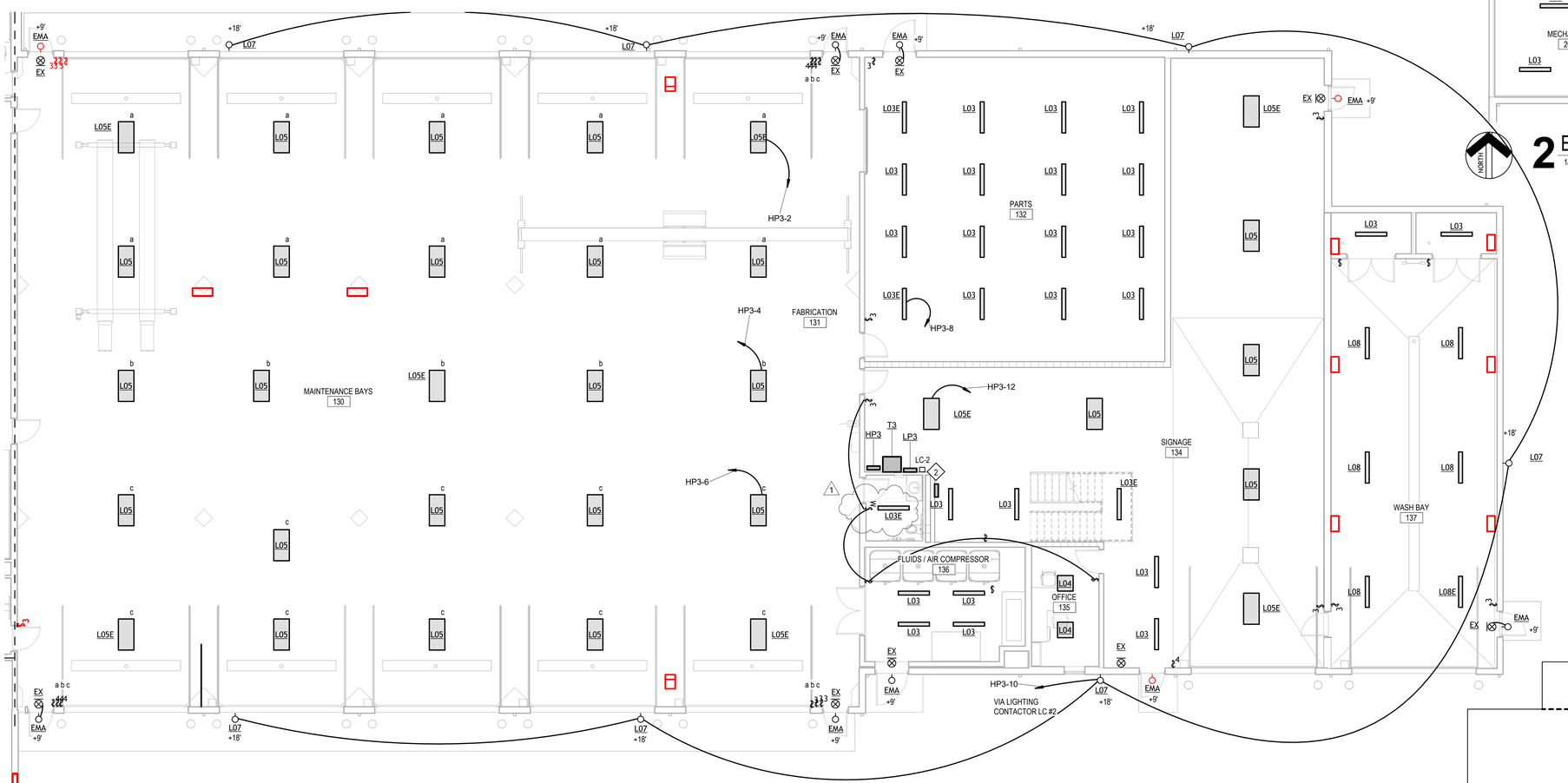

1 Enlarged Maintenance Facility
1/8" = 1'-0"

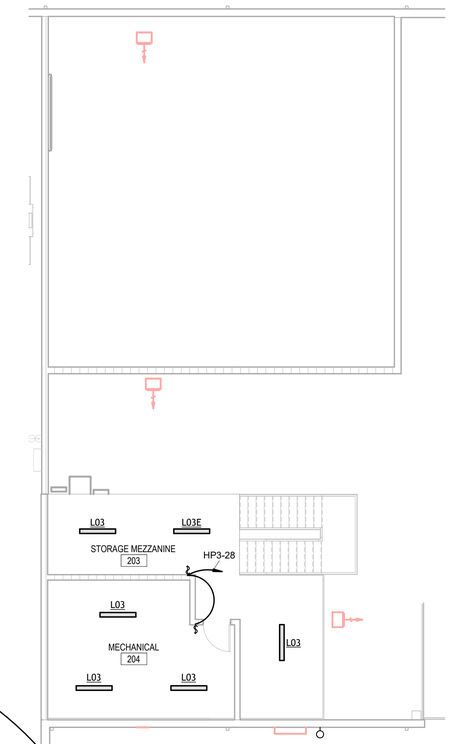

2 Enlarged Maintenance Mezzanine
1/8" = 1'-0"

KEY PLAN

New Construction Work for :

Porter County Highway Department - Central Facility

1955 IN-2
Valparaiso, IN 46385

PORTER COUNTY Indiana

MARTIN RILEY
architects • engineers

221 West Baker Street
Fort Wayne, Indiana 46802

pho 260.422.7994
fax 260.426.2067

RONALD SCHEER JR. REGISTERED No. 10603287 STATE OF INDIANA PROFESSIONAL ENGINEER

REVISION:		DATE:
1	ADDENDUM 3	2024-06-19

DRAWN BY: VRK
REVIEWED BY: RPS
COMMISSION NUMBER: F22146
DATE: 2024-05-24

E303

ELECTRICAL LIGHTING PLAN

F22146 Porter County Highway Department - Central Facility
6/19/2024 3:26:29 PM
C:\Users\SGrilly\Documents\F22146 - Porter Co Hwy Complex - Valpo - MEP_sgrilly.rvt
Project Status

LIGHTING FIXTURE SCHEDULE

TAG	MFG	MODEL	DESCRIPTION	MAX WATTS	MOUNTED	LUMENS	NOTES	ACCEPTABLE MFG/MODEL	ACCEPTABLE MFG/MODEL	ACCEPTABLE MFG/MODEL
EMA	LITHONIA LIGHTING	ERE W SGL SQ WP	EM REMOTE HEAD	5	UNIVERSAL		WIRE TO EXIT	COOPER	HUBBELL	
EX	LITHONIA LIGHTING	LHQM S W 3 R	HO EXIT SIGN	10	UNIVERSAL			COOPER	HUBBELL	
K				50						
L01	LITHONIA LIGHTING	STAK 2X4 5000LM 40K MIN10 MVOLT	VOLUMETRIC TROFFER	42	RECESSED	5000		COOPER	HUBBELL	
L01E	LITHONIA LIGHTING	S/A L01 W/ EM DRIVER	VOLUMETRIC TROFFER	42	RECESSED	5000		COOPER	HUBBELL	
L02	LITHONIA LIGHTING	STAK 2X4 3000LM 40K MIN10 MVOLT	VOLUMETRIC TROFFER	24	RECESSED	3000		COOPER	HUBBELL	
L02E	LITHONIA LIGHTING	S/A L02 W/ EM DRIVER	VOLUMETRIC TROFFER	24	RECESSED	3000		COOPER	HUBBELL	
L03	LITHONIA LIGHTING	2GT8-3-32-A12125-MVOLT-GEB10IS	LENSED STRIP	50	<varies>					
L03E	LITHONIA LIGHTING	2GT8-3-32-A12125-MVOLT-GEB10IS	LENSED STRIP	50	<varies>					
L04	LITHONIA LIGHTING	STAK 2X2 3000LM 40K MIN10 MVOLT	VOLUMETRIC TROFFER	24	CHAIN HANG	3000		COOPER	HUBBELL	
L04E	LITHONIA LIGHTING	S/A L04 W/ EM DRIVER	VOLUMETRIC TROFFER	24	RECESSED	3000		COOPER	HUBBELL	
L05	LITHONIA LIGHTING	CPHB 30LM MVOLT 40K	HI BAY	214	CHAIN HANG	30000		COOPER	HUBBELL	
L05E	LITHONIA LIGHTING	S/A L05 W/ EM DRIVER	HI BAY	214	CHAIN HANG	30000		COOPER	HUBBELL	
L06	JUNO	WF6C REG TUWH MW M6	6" WAFER DOWNLIGHT	13	<varies>		<varies>			
L07	LITHONIA LIGHTING	DSXW1LED 20C 700 40K T3M MVOLT PE DDBXD	WALL PACK	65	WALL	5000		COOPER	HUBBELL	
L08	LITHONIA LIGHTING	FHE L48 28000LM FST MD MVOLT 40K 80 CRI WLF	WET RATED HI BAY WRAP	173	CHAIN HANG	28000		COOPER	HUBBELL	
L08E	LITHONIA LIGHTING	FHE L48 28000LM FST MD MVOLT 40K 80 CRI WLF	WET RATED HI BAY WRAP	173	CHAIN HANG	28000		COOPER	HUBBELL	
L09	LITHONIA LIGHTING	DSXW1LED 20C 700 40K T3M MVOLT DDBXD	AREA POLE MOUNT FIXTURE	45	POLE			COOPER	HUBBELL	
L10	LITHONIA LIGHTING	ESXF1 ALO SWW2 KY DDB	LED FLOODLIGHT	20	KNUCKLE/YOKE	3000		COOPER	HUBBELL	
L11	LITHONIA LIGHTING		4FT FIBERGLASS STRIP FIXTURE	30						

ELECTRICAL - TRANSFORMER SCHEDULE

TAG	MANUFACTURER	KVA	PRIMARY VOLTAGE	SECONDARY VOLTAGE	FED FROM	TEMP (C)	HOUSING	MOUNTING	LOCATION	NOTES
T1	SQUARE D	75	480	120/208	HP1	150	NEMA 1	FLOOR		
T2	SQUARE D	30	480	120/208	HP2	150	NEMA 1	FLOOR		
T3	SQUARE D	75	480	120/208	HP3	150	NEMA 1	FLOOR		
T4	SQUARE D	15	480	120/208	HP4	150	NEMA 1	FLOOR		

ELECTRICAL MOTOR STARTER SCHEDULE

TAG	MFG.	EQUIP. TYPE	HP	VOLTAGE	PHASE	BYPASS	NOTES
FVNR-1	SQUARE D	FAN	1-1/2	480	3	YES	1, 2, 3, 4, 5
FVNR-2	SQUARE D	FAN	1	480	3	YES	1, 2, 3, 4, 5
FVNR-3	SQUARE D	FAN	7-1/2	480	3	YES	1, 2, 3, 4, 5

NOTES:
1. HAND/OFF/AUTO CONTROLS
2. INTERLOCKS
3. PILOT LIGHT
4. SOLID STATE OVERLOAD
5. BACNET CAPABLE
* COORDINATE ALL COIL VOLTAGES WITH MECHANICAL CONTRACTOR

CAMERA AND DOOR ACCESS SCHEDULE

E101	
BOSCH	DS150ITP160 REX MOTION
GENETIC	SY-LP1501 INTELLIGENT CONTROLLER
GRI	180-12-W STEEL DOOR RECESSED SWITCH
HANWHA	LNV-6072R 2MP OUTDOOR CAMERA
HID	40 NKS-00-000000 SIGNO READER
E102	
BOSCH	DS150ITP160 REX MOTION
GENETIC	SY-LP1501 INTELLIGENT CONTROLLER
GRI	180-12-W STEEL DOOR RECESSED SWITCH
HANWHA	PNM-9085RQZ1PTRZ MULTIDIRECTIONAL CAMERA
HANWHA	SBP-317HMW PENDANT CAP
HANWHA	SBP-390WMW2 WALL MOUNT ARM
HANWHA	SBP-300KMW1 CORNER MOUNT
HANWHA	QNO-8080R 5MP OUTDOOR CAMERA
HID	40 NKS-00-000000 SIGNO READER
E103	
BOSCH	DS150ITP160 REX MOTION
GENETIC	SY-LP1501 INTELLIGENT CONTROLLER
GRI	180-12-W STEEL DOOR RECESSED SWITCH
HANWHA	PNM-9085RQZ1PTRZ MULTIDIRECTIONAL CAMERA
HANWHA	SBP-390WMW2 WALL MOUNT ARM
HANWHA	SBP-300KMW1 CORNER MOUNT
HANWHA	SBP-317HMW PENDANT CAP
HANWHA	QNO-8080R 5MP OUTDOOR CAMERA
HANWHA	LNV-6072R 2MP OUTDOOR CAMERA
HID	40 NKS-00-000000 SIGNO READER
E104	
HANWHA	PNM-9085RQZ1PTRZ MULTIDIRECTIONAL CAMERA
HANWHA	SBP-390WMW2 WALL MOUNT ARM
HANWHA	SBP-300KMW1 CORNER MOUNT
HANWHA	SBP-317HMW PENDANT CAP

GENERAL NOTES:
1. HANWHA GOLD CERTIFIED OR HIGHER AND GENETEC UNIFIED ELITE INSTALLER REQUIRED
2. ON SITE DVR REQUIRED TO COMMUNICATE WITH OFFSITE STORAGE SERVER
   A. CAPABLE OF 30 DAY MINIMUM VIDEO RETENTION WITH EXTRA STORAGE ALLOCATED FOR FUTURE EXPANSION
3. PROVIDE ALL EQUIPMENT LISTED, CONDUIT, BOXES, WIRING, CONNECTORS, HARDWARE, SUPPORTS, SOFTWARE, SYSTEM PROGRAMMING, LICENSING, ETC OR EQUAL FOR COMPLETE TURN KEY SYSTEM
4. REFER TO MANUFACTURER SPECIFICATIONS AND LOW VOLTAGE WIRING SPEC FOR ADDITIONAL REQUIREMENTS
5. PROVIDE SYSTEM BATTERY BACKUP AND SURGE PROTECTION
6. GENETEC IS APPROVED VIDEO MANAGEMENT AND ACCESS CONTROL SOFTWARE
7. COORDINATE DOOR ACCESS COMPONENTS WITH HARDWARE SCHEDULES, LOCATIONS AND CONTRACTOR PREFFERED VENDOR:
   A. VIDEOTEC CORPORATION, BOBBY LEE, BOBBYLEE@VIDEOTECSECURITY.COM, (219) 743-7349

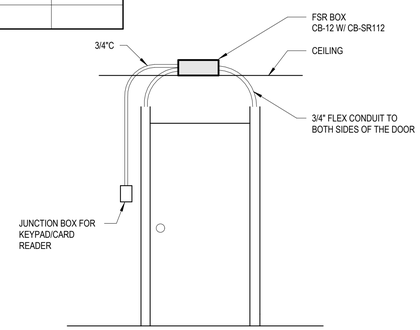

7 Entry Door Detail
NTS

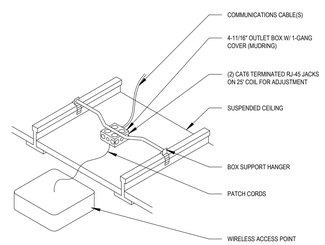

6 WAP Equipment Outlet
NTS

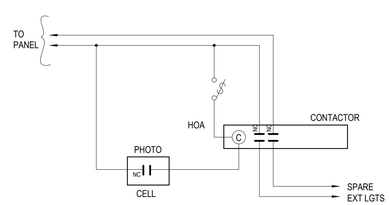

LC-1: TRUCK PARKING
LC-2: MAINTENANCE
LC-3: COLD STORAGE

1. PHOTO CELL " TORK " OR EQUAL.
2. CONTACTOR " SQ D 8903 LG20 V04 " OR EQUAL.

5 Exterior Lighting Controls
NTS

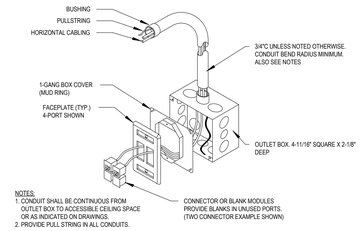

NOTES:
1. CONDUIT SHALL BE CONTINUOUS FROM OUTLET BOX TO ACCESSIBLE CEILING SPACE OR AS INDICATED ON DRAWINGS.
2. PROVIDE PULL STRING IN ALL CONDUITS.

4 Data /Phone Receptacle Detail
NTS

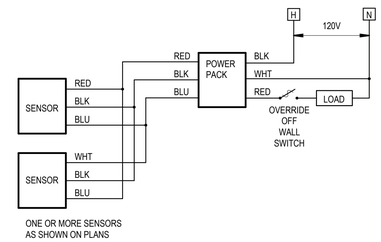

3 Occupancy Sensor Diagram
NTS

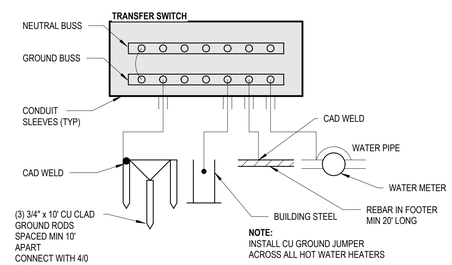

2 MDP Grounding Detail
NTS

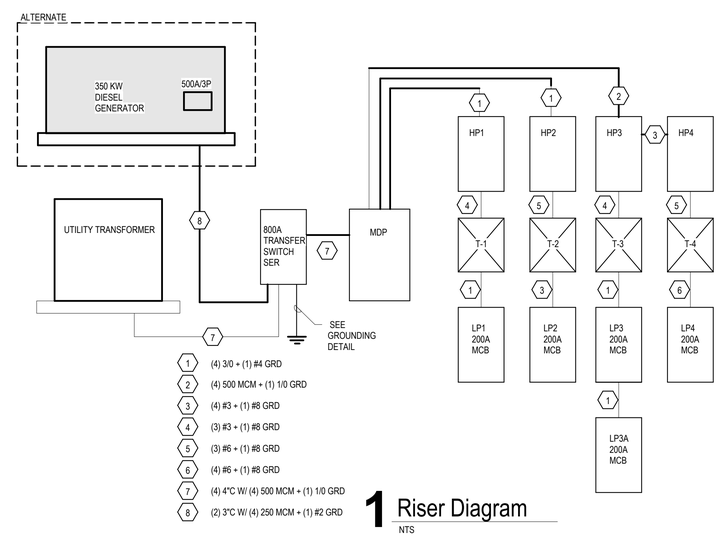

1 Riser Diagram
NTS

New Construction Work for :
Porter County Highway Department - Central Facility

1955 IN-2
Valparaiso, IN 46385

PORTER COUNTY Indiana

MARTIN RILEY
architects • engineers

221 West Baker Street
Fort Wayne, Indiana 46802

pho 260.422.7994
fax 260.426.2067

REVISION:		DATE:
1	ADDENDUM 1	2024-06-12
2	ADDENDUM 3	2024-06-19

DRAWN BY: VRK
REVIEWED BY: RPS
COMMISSION NUMBER: F22146
DATE: 2024-05-24

E501

ELECTRICAL SCHEDULES & DETAILS

F22146 Porter County Highway Department - Central Facility
6/19/2024 3:32:46 PM
C:\Users\SGrilly\Documents\F22146 - Porter Co Hwy Complex - Valpo - MEP_sgrilly.rvt
Project Status

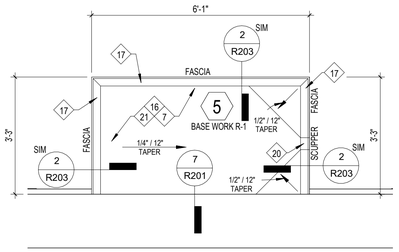

NORTH

4 North Canopy
1/2" = 1'-0"

ROOF PRESSURES
ASCE 7-10

ROOF FIELD	- 43.48 POUNDS PER SQUARE FOOT
ROOF PERIMETER	- 72.96 POUNDS PER SQUARE FOOT
ROOF CORNERS	- 109.81 POUNDS PER SQUARE FOOT

EDGE METAL PRESSURES
ANSI SPRI ES-1 2011

VERTICAL PERIMETER PRESSURE	88.87 POUNDS PER SQUARE FOOT
VERTICAL CORNER PRESSURE	133.84 POUNDS PER SQUARE FOOT
HORIZONTAL PERIMETER PRESSURE	51.31 POUNDS PER SQUARE FOOT
HORIZONTAL CORNER PRESSURE	64.01 POUNDS PER SQUARE FOOT

WOOD NAILERS ARE TO BE INSTALLED IN ACCORDANCE WITH ANSI-SPRI ES1 2011. APPROPRIATE WIND LOAD SAFETY FACTORS ARE TO BE USED BASED ON THE TABLE BELOW

WIND LOAD SAFETY FACTORS

WOOD	4.5
MASONRY	3.0
STEEL	1.9

3 Design Uplift Conditions
N.T.S

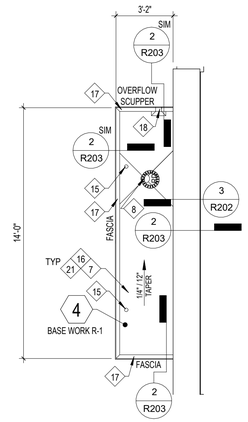

NORTH

2 West Canopy
1/4" = 1'-0"

Work Description Notes

1 NEW MANUFACTURER'S 24" WIDE 24 GA GALVALUME TRAPEZOIDAL STRUCTURAL STANDING SEAM METAL ROOF PANEL CLIP AND THERMAL BLOCKS OVER PURLINS OVER BLANKET INSULATION (R-19) WITH VINYL VAPOR RETARDER, AREAS <2> AND <3>

2 NEW MANUFACTURER'S RIDGE COVER, AREAS <1> AND <2> - SEE DETAIL 4/R201

3 NEW MANUFACTURER'S PREFINISHED RAKE TRIM, AREAS <1> AND <2> - SEE DETAIL 3/R201

4 NEW CONTINUOUS MANUFACTURER'S PREFINISHED GI WIDE GUTTER AND PROVIDE NEW PREFINISHED DOWNSPOUTS (DS). SHINGLELAP AND SANDWHICH BUTYL SEALANT BETWEEN ALL SPICE JOINTS TO DOWNSPOUTS. TIE NEW DOWNSPOUTS INTO SUBSURFACE DRAINAGE WITH NEW TRANSITION PIECE – TRANSITION PIECE TO FIT SNUG TO PREVENT STORM DRAINAGE TO SPLASH BACK DURING RAINFALL. PROVIDE GUTTER EXPANSION JOINTS (GEJ) AS INDICATED ON ROOF PLAN. GUTTERS NOT TO EXCEED FEET IN CONTINUOUS LENGTH, AREAS <1> AND <2> – SEE DETAIL 2/R201 AND 5/R202

5 NEW FULLY ADHERED THERMOPLASTIC BASE FLASHING AT IDENTIFIED ROOF TOP UNITS, POWER ROOF VENTILATORS (PRV) AND OTHER ROOF TOP EQUIPMENT. WRAP MEMBRANE UP AND OVER TOP OF CURBS COORDINATE WITH MEP CONTRACTOR INSTALLATION OF NEW ROOF FLASHING BEFORE EQUIPMENT IS SET UPON CURB, AREA <1> - SEE DETAILS 4/R203

6 NEW PLUMBING VENT (PV) EXTENDED ABOVE ROOF MEMBRANE 12" MIN. PROVIDE NEW TPO PREFORMED FLASHING BOOT, AREAS <1>, <2>, AND <3> - SEE DETAIL 2/R202 AND 4/R202

7 NEW THERMOPLASTIC FLASHINGS AND STRIPPINGS, AREAS <1> AND <4>

8 PROVIDE (3) NEW CAST IRON ROOF DRAINS AND (2) NEW CAST IRON OVERFLOW ROOF DRAINS WITH NEW CAST IRON COMPONENTS, SET ROOF DRAIN CLAMPING RING IN NEW FLEXIBLE SHEET ROOFING FLG, AREAS <1>, AND <4> - SEE DETAIL 1/R201

9 NEW THERMOPLASTIC BASE FLASHING 12" MINIMUM AT ALL NEW MULTI PIPE SEAL (MPS) CURB AND CAP (PROVIDED BY OTHERS) AS INDICATED ON ROOF PLAN, AREA <1> - SEE DETAIL 6/R201

10 NEW 1/2":12" TAPERED INSULATION SADDLES WITH TAPERED EDGE STRIP, AREA <1>

11 PROVIDE (4) NEW 2" X 24" X 24" INTERLOCKING WALKWAY PADS AND NEW PRECAST CONCRETE STEP SET ON NEW WALKWAY PADS, AREA <1>

12 PROVIDE NEW PRE-CAST COPING AND STAINLESS STEEL PAN FLASHING WITH BACKER ROD AND TOOLED URETHANE SEALANT AT HEAD AND OUTER BED JOINTS. PROVIDE TOOLED MORTAR AT INTERIOR BED JOINT, AREA <1> - SEE DETAIL 1/R202 AND 3/R202

13 PROVIDE NEW WALL EXPANSION JOINT (EXP JT) WITH MANUFACTURERS RECOMMENDED FOAM COMPRESSION ROD AND NEW THERMOPLASTIC FLASHING, AREA <1> - SEE DETAIL 1/R203 AND 3/R203

14 PROVIDE NEW (2) LAYERS OF 2" RIGID INSULATION MECHANICALLY ATTACHED (R-21.64), NEW ADHESIVELY ADHERED COVER BOARD (R=0.28) AND NEW ADHESIVELY ADHERED FLEXIBLE SHEET ROOFING (ITA - FSR), AREA <1>

15 PROVIDE NEW MANUFACTURERS LIQUID FLASHING AT NEW CANOPY SUPPORT PENETRATIONS, AREA <4> - SEE DETAIL 2/R203

16 PROVIDE NEW MECHANICALLY ATTACHED 1/4":1/2" TAPERED RIGID INSULATION (START THICKNESS 1/2")(R=6.65), NEW ADHESIVELY ADHERED COVER BOARD (R=0.28), AND NEW ADHESIVELY ADHERED FLEXIBLE SHEET ROOFING (ITA-FSR), AREA <4>

17 PROVIDE NEW PREFINISHED GI FASCIA AND EXTENDER WITH CONTINUOUS FASCIA CLIP, AREAS <4> AND <5> - SEE DETAIL 2/R203

18 PROVIDE NEW PREFINISHED FASICA OVERFLOW SCUPPER, AREA <4> - SEE DETAIL 5/R203

19 PROVIDE NEW MANUFACTURER'S PREFINISHED HIGH EAVE, AREAS <1> - SEE DETAIL 5/R201

20 PROVIDE NEW PREFINISHED FASICA OVERFLOW SCUPPER, AREAS <4> AND <5> - SEE DETAIL 5/R203

21 PROVIDE NEW 20 YEAR MANUFACTURER'S WARRANTY AND 2 YEAR CONTRACTOR'S WARRANTY AREAS <1>, <2>, <3>, <4>, AND <5>

22 PROVIDE NEW FIELD FABRICATE TPO FLASHING OR LIQUID APPLIED FLASHING (RESIN/FLEECE/RESIN) AT EACH STEEL TUBE PENETRATION, AREA <1> - SEE DETAIL 3/R202

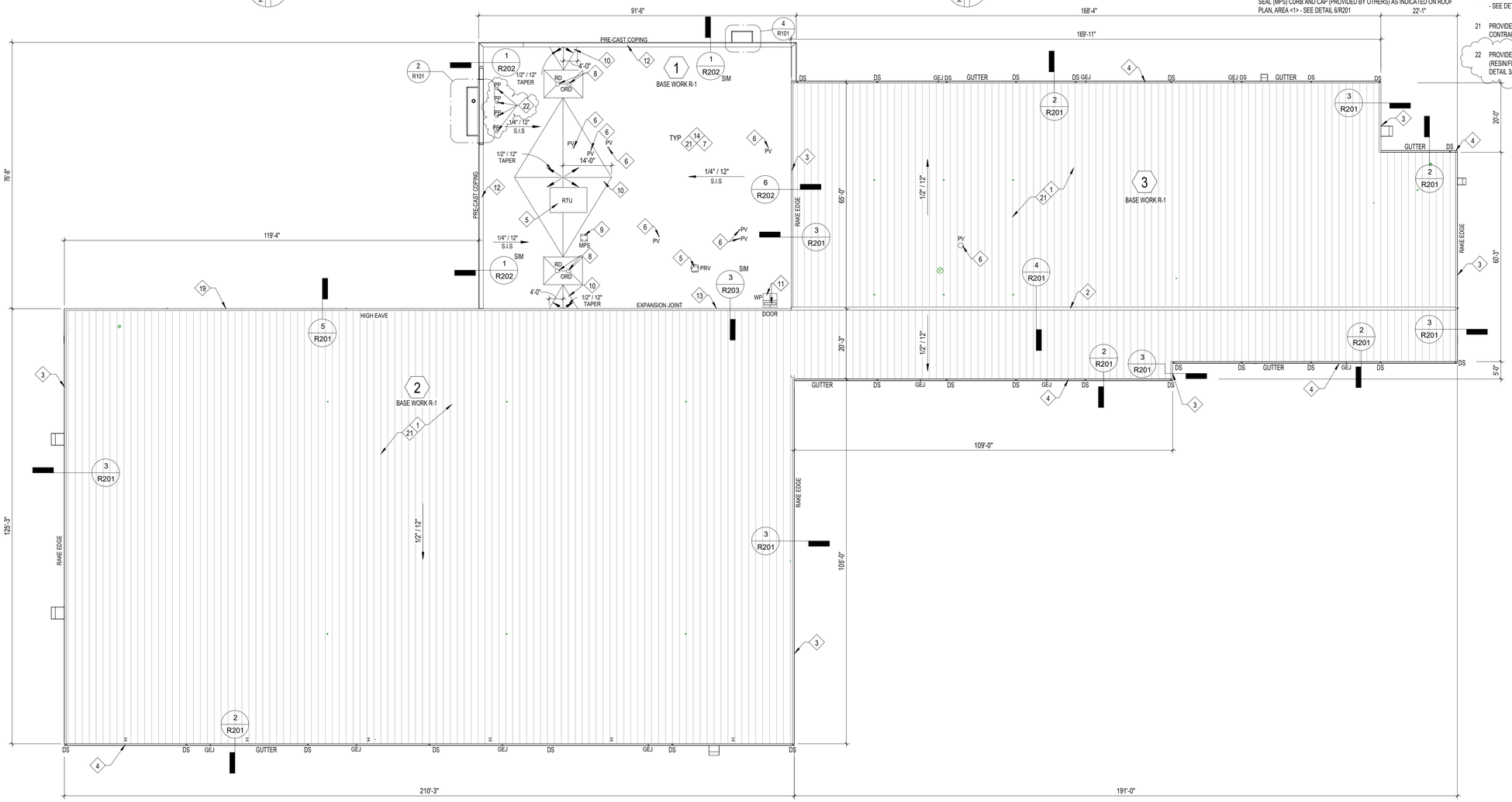

NORTH

1 Roof Plan
1/16" = 1'-0"

New Construction Work for :

Porter County Highway Department - Central Facility

1955 IN-2
Valparaiso, IN 46385

PORTER COUNTY Indiana

MARTIN RILEY
architects • engineers

221 West Baker Street
Fort Wayne, Indiana 46802

pho 260.422.7994
fax 260.426.2067

JACK E. DANIEL REGISTERED No. AR010026 STATE OF INDIANA ARCHITECT

REVISION:		DATE:
1	ADDENDUM 3	2024-0619

DRAWN BY:	SAG	REVIEWED BY:	ALW
COMMISSION NUMBER:	F22146	DATE:	2024-05-24

R101

ROOF PLAN - CENTRAL FACILITY

F22146 Porter County Highway Department - Central Facility
6/19/2024 3:17:34 PM
C:\Users\SGilly\Documents\F22146 - Porter Co Hwy Complex - Valpo - ARCH_sgilly.rvt
SD/DD/CD

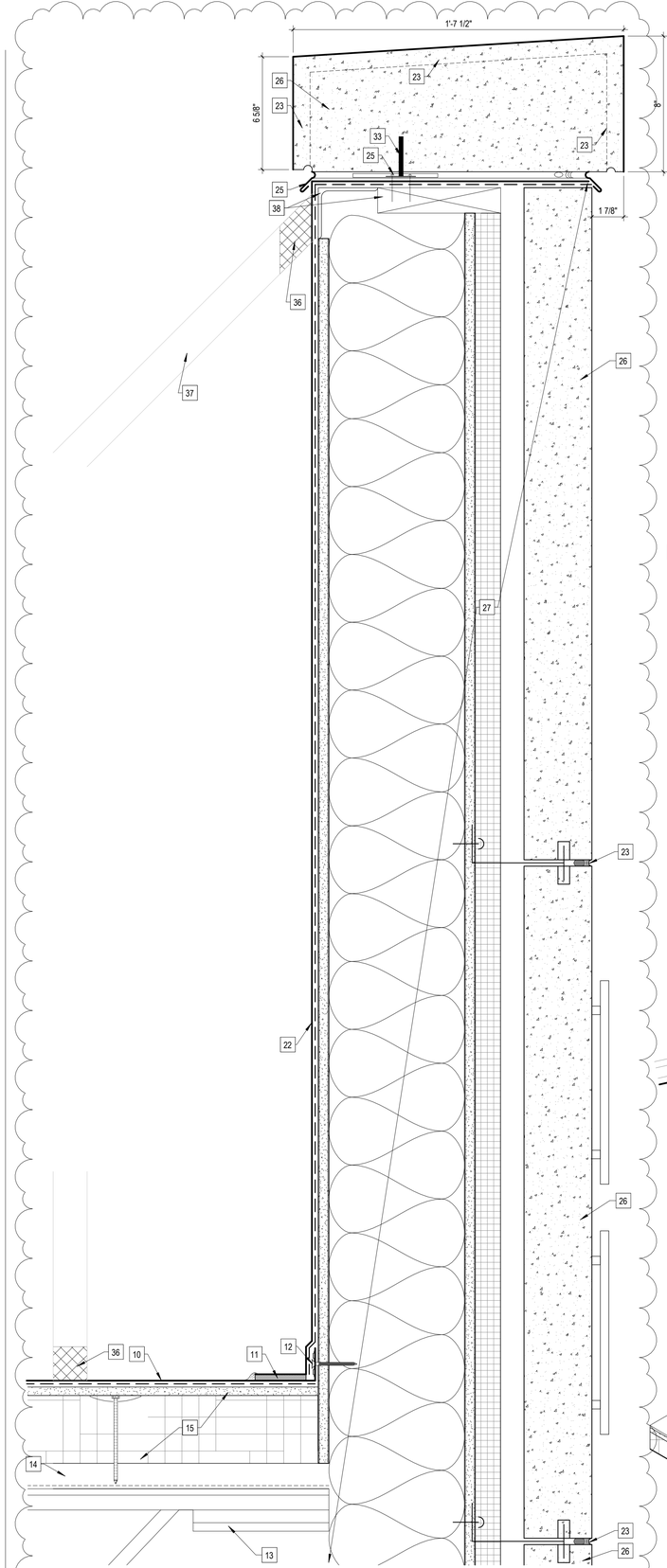

3 Pre-Cast Panel Coping
3" = 1'-0"

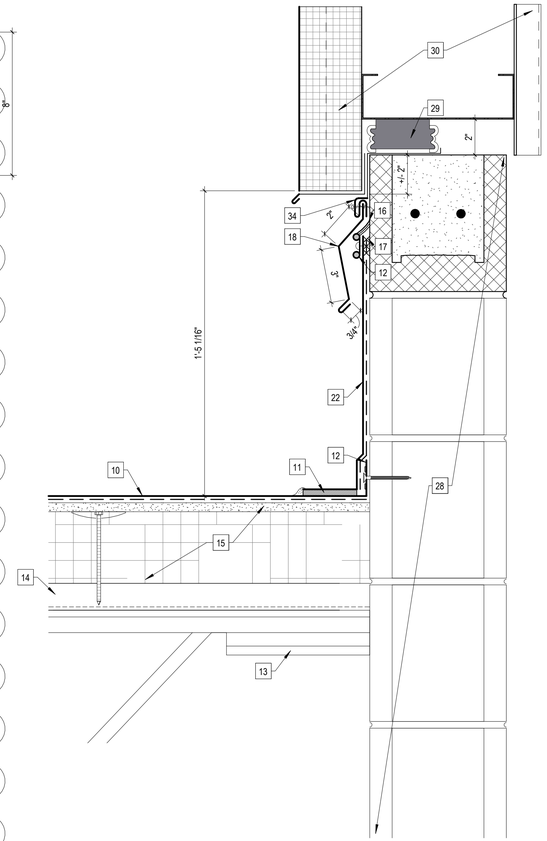

6 Base Flashing Detail
3" = 1'-0"

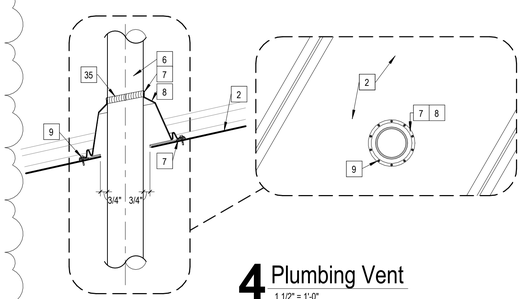

4 Plumbing Vent
1 1/2" = 1'-0"

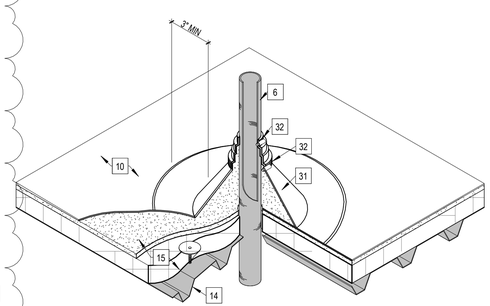

2 Plumbing Vent (FSR)
N.T.S

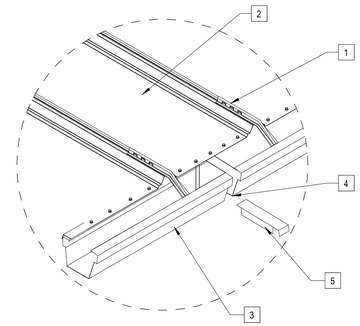

5 Gutter Expansion Joint
1 1/2" = 1'-0"

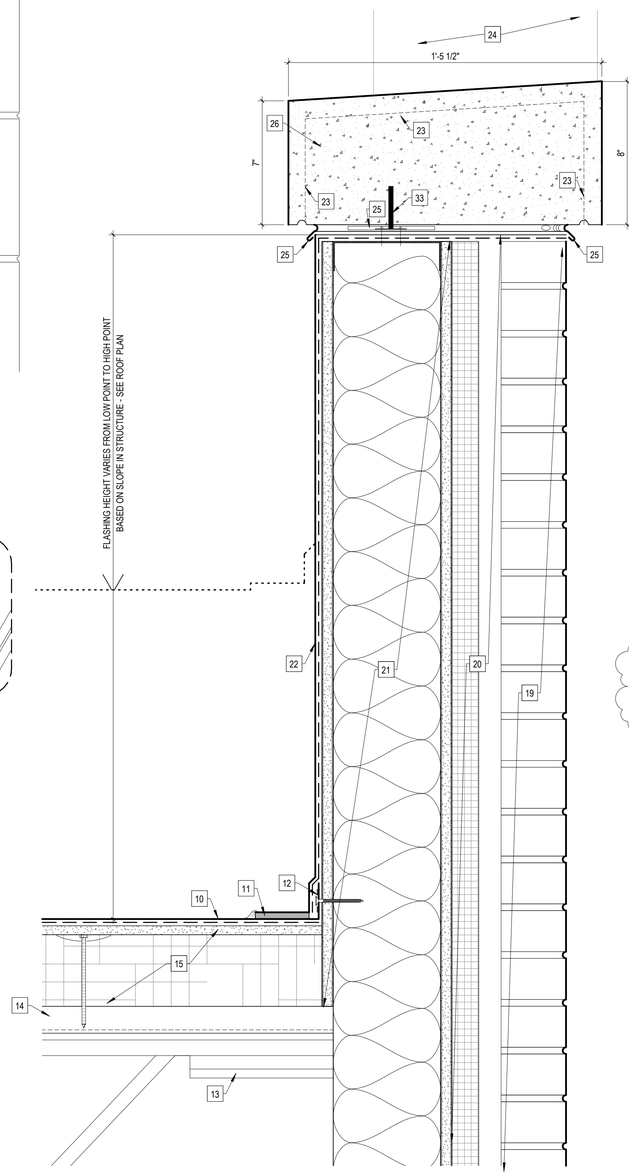

1 Coping
3" = 1'-0"

Detail Work Description Notes

1 NEW MANUFACTURERS GUTTER STRAP
2 NEW MANUFACTURER ROOF PANEL
3 NEW MANUFACTURERS OVERSIZED GUTTER
4 NEW MANUFACTURER'S GUTTER END CAP
5 NEW MANUFACTURER'S GUTTER EXPANSION JOINT COVER TRIM
6 NEW ROOF PENETRATION
7 NEW CONTINUOUS TOOLED URETHANE SEALANT
8 NEW MANUFACTURER'S DEKTITE PIPE BOOT FLASHING
9 NEW MANUFACTURER'S EPDM GASKETED FASTENERS SPACED PER MANUFACTURER'S RECOMMENDATIONS
10 NEW FSR-FLEXIBLE SHEET ROOFING (FSR)
11 NEW HOT AIR WELD JOINT WITH TOOLED MANUFACTURERS RECOMMENDED SEALANT
12 NEW CONTINUOUS MANUFACTURER'S SURFACE MOUNTED TERMINATION BAR MECHANICALLY ATTACHED 6" C/C MAX. CAULK ALL VERTICAL TRANSITIONS
13 NEW STRUCTURAL STEEL FRAMING - SEE STRUCTURAL DRAWINGS
14 NEW 1 1/2" TYPE B METAL DECK
15 NEW MECHANICALLY ATTACHED RIGID INSULATION BOARD AND ADHESIVELY ADHERED COVER BOARD INSULATION
16 NEW MANUFACTURERS APPROVED TOOLED SEALANT
17 NEW WATER CUT OFF MASTIC
18 NEW 24 GA PREFINISHED GI COUNTERFLASHING MECHANICALLY ATTACHED TO RECEIVER AT 12" C/C MAX
19 NEW BRICK VENEER
20 REFER TO WALL SECTIONS FOR WALL COMPOSITION
21 NEW 6" STEEL STUDS WITH MINERAL WOOL INSULATION, MIN R-13 AND 5/8" GYPSUM SHEATHING
22 CLEAN AND PRIME SUBSTRATE, PROVIDE NEW FULLY ADHERED FLEXIBLE SHEET ROOFING (FSR) FLASHING
23 PROVIDE NEW BACKER ROD AND TOOLED URETHANE SEALANT AT ALL HEAD JOINTS AND OUTER BED JOINTS
24 NEW CAST STONE PANEL BEYOND
25 NEW STAINLESS STEEL PAN FLASHING SET IN FULL BED OF MORTAR AND SYNTHETIC SHIMS
26 NEW CAST STONE WALL PANELS AND COPING
27 NEW WALL ASSEMBLY - 5/8" TREATED PLYWOOD, 8" 18 GA STEEL STUDS @ 16" C/C MINERAL WOOL INSULATION MIN R-19, 5/8" GYPSUM SHEATHING, LIQUID APPLIED WEATHER RESISTIVE BARRIER, 1 1/2" RIGID INSULATION, 1 1/4" AIR SPACE
28 NEW 8" CONCRETE MASONRY - SEE STRUCTURAL
29 NEW EMSEAL PRECOMPRESSED FOAM
30 NEW WALL ASSEMBLY - INTERIOR LINER PANEL, ZEE GIRTS, INSULATED METAL WALL PANEL
31 NEW FLEXIBLE PIPE SEAL
32 NEW STAINLESS STEEL COMPRESSION DRAW BAND
33 NEW STAINLESS STEEL PLATE AND DOWEL (2) PER COPING SECTION SECURED TO TOP OF STUD WALL
34 NEW 24 GA PREFINISHED GI REGLET RECEIVER
35 NEW STAINLESS STEEL COMPRESSION DRAW BAND
36 AT EACH NEW STEEL TUBE PENETRATION INSTALL NEW FIELD FABRICATED TPO FLASHING OR LIQUID FLASHING (RESIN/FLEECE/RESIN)
37 NEW STEEL TUBE
38 NEW STEEL ANGLE AND BLOCKING

New Construction Work for :

Porter County Highway Department - Central Facility

1955 IN-2
Valparaiso, IN 46385

PORTER COUNTY Indiana

MARTIN RILEY
architects • engineers

221 West Baker Street
Fort Wayne, Indiana 46802

pho 260.422.7994
fax 260.426.2067

JACK E. DANIEL
REGISTERED
No. AR910026
STATE OF INDIANA

REVISION:		DATE:
1	ADDENDUM 3	2024-0619

DRAWN BY: CLW
REVIEWED BY: ALW
COMMISSION NUMBER: F22146
DATE: 2024-05-24

R202

ROOF DETAILS

F22146 Porter County Highway Department - Central Facility
6/19/2024 3:17:36 PM
C:\Users\SGrilly\Documents\F22146 - Porter Co Hwy Complex - Valpo - ARCH_sgrilly.rvt
S0/DD/CD

Masonry Notes

1. THE DESIGN AND CONSTRUCTION SHALL CONFORM TO THE AMERICAN CONCRETE INSTITUTE "BUILDING CODE REQUIREMENTS FOR MASONRY STRUCTURES (ACI 530)," LATEST EDITION.
2. CMU SHALL BE HOLLOW CONCRETE MASONRY UNITS CONFORMING TO THE REQUIREMENTS OF THE LATEST EDITION OF ASTM C90, GRADE N, TYPE 1, IN NATURAL GRAY COLOR.
3. MINIMUM COMPRESSIVE STRENGTH OF MASONRY, f'_m = 2000 psi.
   a. NET AREA COMPRESSIVE STRENGTH OF CONCRETE MASONRY UNITS WITH TYPE M OR S MORTAR = 2800 psi.
   b. NETA AREA COMPRESSIVE STRENGTH OF CLAY MASONRY UNITS WITH TYPE M OR S MORTAR = 4950 psi.
4. MINIMUM COMPRESSIVE STRENGTH OF GROUT, AS DETERMINED IN ACCORDANCE WITH THE LATEST EDITION OF ASTM C1019, SHALL MEET OR EXCEED f'_m, BUT NOT LESS THAN 2000 psi. GROUT TYPE AND SPACING REQUIREMENTS SHALL CONFORM TO LATEST EDITION OF ACI 530.
5. MORTAR SHALL CONFORM TO THE REQUIREMENTS OF THE LATEST EDITION OF ASTM C270.
6. JOINT REINFORCEMENT SHALL CONFORM TO THE REQUIREMENTS OF THE LATEST EDITION OF ASTM A951.
7. ALL PLAIN WIRE REINFORCING STEEL SHALL COMPLY WITH THE REQUIREMENTS OF THE LATEST EDITION OF ASTM A82.
8. REINFORCING BARS SHALL BE DEFORMED BARS CONFORMING TO THE REQUIREMENTS OF THE LATEST EDITION OF ASTM A615, GRADE 60.
9. REINFORCING BARS SHALL HAVE A MASONRY COVER NOT LESS THAN THE FOLLOWING, UNLESS NOTED OTHERWISE:
   a. MASONRY FACE EXPOSED TO EARTH OR WEATHER
      - #6 BARS AND LARGER....................2"
      - #5 BARS AND SMALLER....................1-1/2"
   b. MASONRY NOT EXPOSED TO EARTH OR WEATHER....................1-1/2"
10. THE REQUIRED DEVELOPMENT LENGTH OF REINFORCING BARS SHALL NOT BE LESS THAN 12 INCHES, AND AS FOLLOWS (f_m' = 2000 psi, K = 2, f_y = 60,000 psi):
    a. #3 THROUGH #5....................88d_b^2
    b. #6 THROUGH #7....................114d_b^2
    c. #8 THROUGH #11....................131d_b^2
11. PLATE AND BENT BAR ANCHORS SHALL CONFORM TO THE REQUIREMENTS OF THE LATEST EDITION OF ASTM A36.
12. ANCHOR BOLTS SHALL CONFORM TO THE REQUIREMENTS OF THE LATEST EDITION OF ASTM A307, GRADE A.
13. ANCHOR BOLTS PLACED IN THE TOP OF GROUTED CELLS AND BOND BEAMS SHALL BE POSITIONED TO MAINTAIN A MINIMUM OF:
    a. 1/4-INCH OF FINE GROUT BETWEEN THE BOLTS AND THE MASONRY UNIT.
    b. 1/2-INCH OF COURSE GROUT BETWEEN THE BOLTS AND THE MASONRY UNIT.
14. ANCHOR BOLTS PLACED IN DRILLED HOLES IN THE FACE SHELLS OF HOLLOW MASONRY UNITS SHALL BE PERMITTED TO CONTACT THE MASONRY UNIT WHERE THE BOLT PASSES THROUGH THE FACE SHELL PROVIDED THE PORTION OF THE BOLT THAT IS WITHIN THE GROUTED CELL SHALL BE POSITIONED TO MAINTAIN A MINIMUM OF:
    a. 1/4-INCH OF FINE GROUT BETWEEN THE HEAD OR BENT LEG OF EACH BOLT AND THE MASONRY UNIT.
    b. 1/2-INCH OF COURSE GROUT BETWEEN THE HEAD OR BENT LEG OF EACH BOLT AND THE MASONRY UNIT.
15. THE CLEAR DISTANCE BETWEEN ANCHOR BOLTS SHALL NOT BE LESS THAN THE NOMINAL DIAMETER OF THE ANCHOR BOLT, NOR LESS THAN ONE INCH.
16. SLEEVE TYPE ANCHORS SHALL FEATURE A SPLIT EXPANSION SLEEVE OVER A THREADED STUD BOLT BODY AND INTEGRAL EXPANDER, NUT AND WASHER; SHALL BE ZINC-PLATED CARBON STEEL, UNLESS OTHERWISE SPECIFIED AS STAINLESS STEEL (TYPE 304); AND SHALL BE INSTALLED WITH CARBIDE TIPPED HAMMER DRILL BITS MADE IN ACCORDANCE TO ANSI B212.15-1994.
17. DETAILS OF REINFORCEMENT AND METAL ACCESSORIES AS WELL AS PROTECTION REQUIREMENTS SHALL BE IN ACCORDANCE WITH THE LATEST EDITION OF ACI 530.
18. MASONRY LINTEL TOP REINFORCEMENT SHALL EXTEND TWO INCHES BEYOND ROUGH OPENING AND BOTTOM REINFORCEMENT SHALL EXTEND EIGHT INCHES BEYOND ROUGH OPENING.
19. PROVIDE A MINIMUM BEARING LENGTH OF EIGHT INCHES AT EACH END OF REINFORCED MASONRY LINTELS.
20. ALL MASONRY WALLS SHALL BE PLACED IN A RUNNING-BOND PATTERN UNLESS SPECIFICALLY DETAILED OTHERWISE.
21. MESH WALL TIES (MWT) SHALL CONFORM TO THE REQUIREMENTS OF ASTM A185 AND SHALL BE COMPRISED OF MATERIALS CONFORMING TO THE FOLLOWING, AS SPECIFICALLY CALLED OUT IN THE DETAILS:
    a. COLD-DRAWN STEEL WIRE....................ASTM A1064/A1064M
    b. HARDWARE CLOTH....................ASTM A740
    c. HOT-DIP GALVANIZED....................ASTM A153/A153M-B2 CLASS B
    d. STAINLESS STEEL....................ASTM E2016, TYPE 304

Steel Joist Notes

1. STEEL JOIST CONSTRUCTION SHALL CONFORM TO THE LATEST EDITION OF THE STEEL JOIST INSTITUTE'S "STANDARD SPECIFICATIONS, LOAD TABLES, & WEIGHT TABLES FOR STEEL JOISTS & JOIST GIRDERS".
2. HANDLING AND ERECTION OF STEEL JOISTS AND MATERIALS SHALL COMPLY WITH THE STEEL JOIST INSTITUTE'S TECHNICAL DIGEST 9, "HANDLING AND ERECTION OF STEEL JOISTS AND JOIST GIRDERS".
3. THE MAXIMUM SPACING OF STEEL JOISTS SHALL BE AS SHOWN ON THE STRUCTURAL PLANS. PROVIDE HEADERS AND DOUBLE JOISTS AS REQUIRED TO FRAME AROUND OPENINGS SHOWN ON THE STRUCTURAL PLANS. THIS WORK SHALL BE FULLY COORDINATED WITH ALL OTHER TRADES.
4. ENDS OF STEEL JOISTS SHALL BE ANCHORED TO THE SUPPORTING MEMBERS AS INDICATED BY TYPICAL DETAILS PROVIDED ON THE STRUCTURAL PLANS.
5. PROVIDE JOIST SUBSTITUTES CAPABLE OF CARRYING ALLOWABLE TOTAL SAFE LOADS IN LBS/ LINEAR FOOT AS CALLED FOR ON DRAWINGS.
6. BRIDGING AND BRIDGING ANCHORS SHALL BE IN ACCORDANCE WITH SECTION 2.7 OF THE SJI CODE OF STANDARD PRACTICE. BRIDGING, STANDARD WITH THE MANUFACTURER AND COMPLYING WITH THE STEEL JOIST INSTITUTE STANDARD SPECIFICATIONS LOAD TABLES & WEIGHT TABLES OF LATEST ADOPTION, SHALL BE USED FOR BRIDGING ALL JOISTS FURNISHED BY THE MANUFACTURER. POSITIVE ANCHORAGE SHALL BE PROVIDED AT THE ENDS OF EACH BRIDGING ROW AT BOTH TOP AND BOTTOM CHORDS.
7. MINIMUM 3/8 INCH DIAMETER A307 BOLTS TO BE USED IN ALL BOLTED BRIDGING CONNECTIONS. ALL BOLTS SHALL BE TIGHTENED TO A MINIMUM SNUG-TIGHT CONDITION AND WASHERS SHALL BE USED WITH SLOTTED OR OVERSIZED HOLES.
8. ADDITIONAL UPLIFT BRIDGING SHALL BE INSTALLED AS REQUIRED PER SJI STANDARD SPECIFICATIONS.
9. VERIFY SIZE AND LOCATION OF ANY INDICATED ROOF OPENINGS WITH MECHANICAL CONTRACTOR (SEE MECHANICAL PLANS FOR ROOF TOP UNIT, RTU, LOCATIONS).
10. JOIST MANUFACTURER SHALL DESIGN ROOF JOISTS, WHERE RTU'S ARE INDICATED, FOR A 500 LB ADD-LOAD (SEE ROOF PLAN). REINFORCE JOISTS AT CONCENTRATED LOAD LOCATIONS IN ACCORDANCE WITH FIELD REINFORCEMENT DETAIL PROVIDED.

Structural Steel Notes

1. STRUCTURAL STEEL TO BE FABRICATED AND ERECTED IN ACCORDANCE WITH AISC 360 "SPECIFICATIONS FOR STRUCTURAL STEEL BUILDINGS", AND AISC 303 "CODE OF STANDARD PRACTICE FOR STEEL BUILDINGS AND BRIDGES."
2. DETERMINE, FURNISH AND INSTALL ALL TEMPORARY SUPPORTS, SUCH AS TEMPORARY GUYS, BEAMS, FALSEWORK, CRIBBING OR OTHER ELEMENTS REQUIRED FOR THE ERECTION OPERATION. THESE TEMPORARY SUPPORTS SHALL BE SUFFICIENT TO SECURE THE BARE STRUCTURAL STEEL FRAMING OR ANY PORTION THEREOF AGAINST LOADS THAT ARE LIKELY TO BE ENCOUNTERED DURING ERECTION, INCLUDING THOSE DUE TO WIND AND THOSE THAT RESULT FROM ERECTION OPERATIONS.
3. STRUCTURAL STEEL SHOP-STANDARD MATERIAL SHALL BE AS FOLLOWS:
   a. W AND WT-SHAPES TO BE ASTM A992
   b. M, S, MT, ST-SHAPES TO BE ASTM A36
   c. HP-SHAPES TO BE ASTM A36
   d. L-SHAPES TO BE ASTM A36
   e. C AND MC-SHAPES TO BE ASTM A36
   f. HSS-SHAPES TO BE ASTM A500, GRADE B
   g. PIPE TO BE ASTM A53, GRADE B
   h. PLATES AND BARS TO BE ASTM A36
   i. ALL-THREAD ROD TO BE ASTM A36
   j. ANCHOR RODS TO BE ASTM F1554, GRADE 36
   k. HEADED STUDS TO BE TYPE B WITH MINIMUM TENSILE STRENGTH, F_u = 65 ksi, AND MINIMUM YIELD STRENGTH, F_y = 51 ksi.
4. BAR GRATING TO BE 19-W-4, WELDED, 1-1/4" x 3/16" RECTANGULAR BAR, SERRATED SURFACE, HOT DIPPED, GALVANIZED STEEL.
5. STAIR TREADS TO BE 19-W-4, WELDED, 1-1/4" x 3/16" RECTANGULAR BAR, SERRATED SURFACE, HOT DIPPED, GALVANIZED STEEL W/ CHECKERED PLATE 90° ANGLE NOSING AND BAR GRATING STAIR TREAD CARRIER PLATES ATTACHED.
6. HIGH-STRENGTH BOLTS SHALL MEET THE MATERIAL STRENGTHS OF ANSI/AISC 360 SPECIFICATION GROUP A. DOCUMENTATION SHALL BE PROVIDED BY THE CONTRACTOR TO PROVE QUALITY OF THE BOLTS AND THREADED PARTS.
7. ALL WELDING SHALL BE IN ACCORDANCE WITH THE AWS D1.1 "STRUCTURAL WELDING CODE - STEEL" PUBLISHED BY THE AMERICAN WELDING SOCIETY. ELECTRODES FOR WELDED JOINTS SHALL COMPLY WITH THE REQUIREMENTS OF TABLE 3.1 OF AWS D1.1. ALL WELDING TO BE COMPLETED BY QUALIFIED WELDERS CONFORMING TO THE AMERICA WELDING SOCIETY STANDARDS.
8. THE STEEL FABRICATOR SHALL DESIGN AND SUPPLY APPROPRIATE PRODUCTS FOR ALL STEEL AND METAL ITEMS NOT SPECIFICALLY DETAILED ON DRAWINGS. ALL DESIGNS, METHODS, AND MATERIALS, SHALL COMPLY WITH THE AISC "STEEL CONSTRUCTION MANUAL", CURRENT EDITION.
9. FABRICATION "SHOP" DRAWINGS SHALL BE SUPPLIED BY THE CONTRACTOR. ALL SHOP DRAWINGS SHALL BE SUBMITTED TO THE ENGINEER OF RECORD FOR REVIEW AND APPROVAL PRIOR TO FABRICATION.
10. ALL BOLTED CONNECTIONS TO BE SNUG-TIGHTENED JOINTS PER "THE SPECIFICATION FOR STRUCTURAL JOINTS USING ASTM A325 OR A490 BOLTS", UNLESS NOTED OTHERWISE.
11. BOLTED CONNECTIONS INDICATED AS PRE-TENSIONED SHALL BE FASTENED BY MEANS OF THE TURN-OF-NUT METHOD, UNLESS NOTED OTHERWISE.
12. SIMPLE SHEAR CONNECTIONS SHALL BE DESIGNED BY THE FABRICATOR'S ENGINEER FOR THE REACTION LISTED IN THE DRAWINGS. IF NO REACTION IS PROVIDED, THE FABRICATOR'S ENGINEER SHALL DESIGN THE CONNECTION FOR AT LEAST 50% OF THE SUPPORTED BEAM'S UNIFORM LOAD CONSTANT, W_c/Ω_b, DIVIDED BY THE SPAN LENGTH, L, AS TABULATED IN THE CURRENT EDITION OF THE AISC "STEEL CONSTRUCTION MANUAL", PART 3, "MAXIMUM TOTAL UNIFORM LOAD TABLES".
13. SIMPLE SHEAR CONNECTIONS, NOT SHOWN IN THE DRAWINGS, SHALL BE DETAILED BY THE STEEL FABRICATOR IN ACCORDANCE WITH THE CURRENT EDITION OF THE AISC "STEEL CONSTRUCTION MANUAL", PART 10, "DESIGN OF SIMPLE SHEAR CONNECTIONS".
    a. FOR SHEAR END-PLATE OR DOUBLE-ANGLE CONNECTIONS, OFFSET HOLES OR ADD ADDITIONAL ROWS OF BOLTS AS REQUIRED TO COMPLY WITH OSHA SAFETY BOLTING REQUIREMENTS.
    b. MINIMUM LENGTH OF CONNECTING ANGLES OR PLATES SHALL BE GREATER THAN THE SUPPORTED BEAM 'T' DIMENSION DIVIDED BY 2.
14. HORIZONTAL AND VERTICAL BRACING CONNECTIONS SHALL BE DESIGNED BY THE FABRICATOR'S ENGINEER FOR THE AXIAL LOAD (COMPRESSION OR TENSION) LISTED IN THE DRAWINGS. IF NO LOAD IS PROVIDED, THE FABRICATOR'S ENGINEER SHALL DESIGN THE BRACING CONNECTION FOR 100% OF THE BRACING MEMBER'S AVAILABLE STRENGTH IN AXIAL TENSION (ASD), AS GIVEN IN THE CURRENT EDITION OF THE AISC "STEEL CONSTRUCTION MANUAL", PART 5.
15. HORIZONTAL AND VERTICAL BRACING CONNECTIONS, NOT SHOWN IN THE DRAWINGS, SHALL BE DETAILED BY THE FABRICATOR IN ACCORDANCE WITH THE CURRENT EDITION OF AISC "STEEL CONSTRUCTION MANUAL", AND AISC 360, AS APPLICABLE.
    a. GUSSET PLATES SHALL BE SIZED TO ACCOMMODATE REQUIRED LOADS. AS A MINIMUM, GUSSETS SHALL BE 3/8 INCH THICK.
    b. AS A MINIMUM, THE WELD BETWEEN THE GUSSET PLATE AND THE SUPPORT SHALL BE SIZED AS (5/8)t_p.
    c. AS A MINIMUM, 3/4-INCH DIAMETER BOLTS SHALL BE UTILIZED FOR BOLTED CONNECTIONS. IF A BOLT IS CHOSEN WITH A NOMINAL DIAMETER GREATER THAN ONE INCH, INCREASE THE SPACING BETWEEN BOLTS TO A MINIMUM OF 3d.
    d. ACTUAL LOAD REQUIREMENTS MAY DICTATE THAT MORE BOLTS ARE REQUIRED. A MINIMUM OF TWO BOLTS SHALL BE UTILIZED.
16. FABRICATE AND ERECT ALL BEAMS WITH THE MILL CAMBER UP.
17. ALL STRUCTURAL STEEL SHALL BE CLEANED AND PREPARED FOR THE SPECIFIED COATING SYSTEM IN ACCORDANCE WITH THE REQUIREMENTS OF SSPC-SP2, UNLESS OTHERWISE SPECIFIED BY THE COATING SYSTEM MANUFACTURER.
18. STRUCTURAL STEEL MEMBERS COMPLETELY ENCLOSED IN THE BUILDING ENVELOPE SHALL BE SHOP COATED WITH THE FABRICATOR'S STANDARD SHOP PAINT APPLIED TO A MINIMUM DRY-FILM THICKNESS OF ONE MIL.
19. STRUCTURAL STEEL MEMBERS ON THE EXTERIOR OF THE BUILDING, EXPOSED TO SOIL, OR OTHERWISE EXPOSED TO CONDITIONS PROMOTING CORROSION SHALL BE, AT A MINIMUM, PROPERLY PRIMED WITH RUST INHIBITING PRIMER AND PAINTED. REFER TO ARCHITECTURAL DOCUMENTS FOR ADDITIONAL REQUIREMENTS OF EXPOSED STEEL.
20. THE CONTRACTOR THAT PERFORMS TOUCH-UP AND FIELD PAINTING IS RESPONSIBLE FOR ALL TOUCH-UP OF ABRASIONS CAUSED BY HANDLING AFTER PAINTING.
21. NON-SHRINK GROUT USED FOR SETTING AND FINISHING COLUMN BASE PLATES AND EQUIPMENT BASES SHALL BE A COMMERCIALLY PRE-MIXED AND BAGGED NON-METALLIC PRODUCT, AS APPROVED BY OWNER, CONTAINING, AS PART OF THE MIX, AN ADDITIVE TO COUNTERACT SHRINKAGE AND SETTLEMENT OF THE GROUT. NON-SHRINK GROUT SHALL REQUIRE ONLY THE ADDITION OF MIXING WATER FOR USE, AND SHALL HAVE A MINIMUM COMPRESSIVE STRENGTH OF 7000 psi AT 28 DAYS.

PEMB Structural Steel Notes

1. PRE-ENGINEERED METAL BUILDING (PEMB) STRUCTURAL COMPONENENTS TO BE DESIGNED AND DETAILED PER PEMB MANUFACTURER.
2. THE CONTRACTOR TO SUPPLY SEALED ENGINEERING DESIGN DATA AND DRAWINGS FOR PEMB MANUFACTURER SUPPLIED MATERIAL AS PART OF THE OVERALL PROJECT TO OBTAIN PERMITS, APPROVALS, AND COORDINATE OTHER TRADES.

Concrete Notes

1. THE DESIGN AND CONSTRUCTION SHALL CONFORM TO THE AMERICAN CONCRETE INSTITUTE "BUILDING CODE REQUIREMENTS FOR STRUCTURAL CONCRETE (ACI 318)", LATEST EDITION AND "CODE REQUIREMENTS FOR ENVIRONMENTAL ENGINEERING CONCRETE STRUCTURES (ACI 350)", LATEST EDITION.
2. CONCRETE CONSTRUCTION SHALL BE IN ACCORDANCE WITH THE AMERICAN CONCRETE INSTITUTE "SPECIFICATIONS FOR STRUCTURAL CONCRETE (ACI 301)", LATEST EDITION AND "SPECIFICATION FOR TOLERANCES FOR CONCRETE CONSTRUCTION AND MATERIALS (ACI 117)", LATEST EDITION.
3. WHEN CONDITIONS ARE SUCH THAT THE AMBIENT TEMPERATURE MAY BE EXPECTED TO BE 40°F OR LESS, WORK SHALL CONFORM TO THE AMERICAN CONCRETE INSTITUTE "GUIDE TO COLD WEATHER CONCRETING (ACI 306R)," LATEST EDITION.
4. WHEN CONDITIONS ARE SUCH THAT THE AMBIENT TEMPERATURE MAY BE EXPECTED TO BE 80°F OR HIGHER, WORK SHALL CONFORM TO THE AMERICAN CONCRETE INSTITUTE "GUIDE TO HOT WEATHER CONCRETING (ACI 305R)," LATEST EDITION.
5. CONCRETE SHALL BE NORMAL WEIGHT CONCRETE CONFORMING TO THE FOLLOWING REQUIREMENTS:
   a. FOUNDATIONS:
      - MINIMUM COMPRESSIVE STRENGTH AT 28 DAYS, f'_c = 4000 psi
      - MAXIMUM WATER-CEMENTITIOUS MATERIAL RATIO, w/cm = 0.50
      - AIR-ENTRAINED WITH 5% AIR CONTENT (+/- 1.5%)
   b. EXTERIOR EXPOSED SLABS, WALLS, PIERS, PEDESTALS AND COLUMNS:
      - MINIMUM COMPRESSIVE STRENGTH AT 28 DAYS, f'_c = 5000 psi
      - MAXIMUM WATER-CEMENTITIOUS MATERIAL RATIO, w/cm = 0.45
      - AIR-ENTRAINED WITH 5% AIR CONTENT (+/- 1.5%)
   c. INTERIOR SLABS, WALLS, PIERS, PEDESTALS AND COLUMNS:
      - MINIMUM COMPRESSIVE STRENGTH AT 28 DAYS, f'_c = 4000 psi
      - MAXIMUM WATER-CEMENTITIOUS MATERIAL RATIO, w/cm = 0.50
      - AIR-ENTRAINED = N/A
6. THE CONTRACTOR SHALL SUBMIT CONCRETE MIX DESIGNS TO THE ENGINEER OF RECORD FOR APPROVAL PRIOR TO PLACEMENT OF ANY CONCRETE STRUCTURES.
7. THE CONTRACTOR SHALL TAKE SAMPLES FOR STRENGTH TESTS OF EACH CLASS OF CONCRETE PLACED EACH DAY. SAMPLES FOR STRENGTH TESTS SHALL BE TAKEN NOT LESS THAN ONCE PER DAY, NOR LESS THAN ONCE FOR EACH 150 yd³ OF CONCRETE, NOR LESS THAN ONCE FOR EACH 5000 ft² OF SURFACE AREA FOR SLABS OR WALLS. THREE 4x8-INCH CYLINDERS SHALL BE TESTED AT SEVEN DAYS AND 28 DAYS FOR EACH SAMPLE TAKEN.
8. REINFORCING BARS SHALL BE DEFORMED BARS CONFORMING TO THE REQUIREMENTS OF ASTM A615, LATEST EDITION, GRADE 60 (F_y = 60 ksi).
9. DETAILS AND DETAILING OF CONCRETE REINFORCEMENT SHALL BE IN ACCORDANCE WITH THE "ACI DETAILING MANUAL," REPORTED BY ACI COMMITTEE 315. THE CONTRACTOR SHALL SUBMIT REINFORCEMENT SHOP DRAWINGS TO THE ENGINEER OF RECORD FOR REVIEW AND APPROVAL.
10. PLACEMENT OF REINFORCEMENT BARS IN FOOTINGS, WALLS AND COLUMNS SHALL BE EVENLY SPACED WITHIN THE STRUCTURE. DRIVING OR PUSHING DOWELS INTO WET CONCRETE IS PROHIBITED.
11. CONCRETE COVER FOR REINFORCEMENT SHALL NOT BE LESS THAN THE FOLLOWING:
    a. CONCRETE CAST AGAINST AND PERMANENTLY EXPOSED TO EARTH....................3"
    b. CONCRETE EXPOSED TO EARTH OR WEATHER:
       - #6 THROUGH #18 BARS....................2"
       - #5 BAR, W31 OR D31 WIRE, AND SMALLER....................1-1/2"
    c. CONCRETE NOT EXPOSED TO WEATHER OR IN CONTACT WITH GROUND:
       - SLABS, WALL, JOISTS:
       - #14 BAR AND #18 BARS....................1-1/2"
       - #11 BAR AND SMALLER....................3/4"
    d. BEAMS, COLUMNS:
       - PRIMARY REINFORCEMENT, TIES, STIRRUPS, SPIRALS....................1-1/2"
12. CONTINUOUS UNCOATED REINFORCEMENT OF DEFORMED BARS NOT LARGER THAN #11 MAY BE LAPPED AT SPLICES. THE MINIMUM LAP LENGTH SHALL BE AS REQUIRED FOR CLASS A OR CLASS B SPLICE, BUT NOT LESS THAN 12 INCHES (f_c' = 4000 psi).
    a. CLASS A SPLICE = (1.0)l_d
       - #6 AND SMALLER BARS AND DEFORMED WIRES....................38d_b
       - #7 AND LARGER BARS....................47d_b
    b. CLASS B SPLICE = (1.3)l_d
       - #6 AND SMALLER BARS AND DEFORMED WIRES....................49d_b
       - #7 AND LARGER BARS....................62d_b
13. CONCRETE FOUNDATIONS SHALL NOT BE PLACED ON FROZEN GROUND SURFACE OR PLACED IN WATER. THE CONTRACTOR SHALL USE A DEWATERING POINT SYSTEM, AS NECESSARY.
14. ALL NORMAL STRENGTH CONCRETE SHALL BE MAINTAINED ABOVE 50°F AND IN A MOIST CONDITION FOR A MINIMUM OF SEVEN DAYS AFTER PLACEMENT BEFORE ANY EXTERNAL LOADS CAN BE APPLIED.
15. CONCRETE NOTED AS HIGH-EARLY STRENGTH SHALL BE MAINTAINED ABOVE 50°F AND IN A MOIST CONDITION FOR A MINIMUM OF THREE DAYS AFTER PLACEMENT BEFORE ANY EXTERNAL LOADS CAN BE APPLIED.
16. THE CONTRACTOR SHALL BE RESPONSIBLE TO DESIGN, FURNISH AND PLACE ALL TEMPORARY OR PERMANENT SHORING AND/OR BRACING TO PROTECT EXCAVATIONS, EXISTING STRUCTURES, AND UTILITIES ADJACENT TO THE SITE. DETAILED INFORMATION ON FORMWORK FOR CONCRETE IS GIVEN IN THE "GUIDE TO FORMWORK FOR CONCRETE," REPORTED BY ACI COMMITTEE 347.
17. THE CONTRACTOR SHALL PROVIDE ALL NECESSARY TEMPORARY SHORING REQUIRED TO RETAIN THE STABILITY OF THE STRUCTURE WHILE REPAIRS AND REHABILITATION TAKE PLACE.
18. THE CONTRACTOR SHALL PROVIDE ALL NECESSARY LABOR AND MATERIALS FOR UNDERPINNING REQUIREMENTS WHEN PLACING FOOTINGS NEXT TO OR BELOW EXISTING ADJACENT STRUCTURES, AS APPLICABLE.
19. NEATLY FORMED EARTH TRENCHES MAY BE PERMITTED FOR CASTING GRADE BEAMS WHERE SOIL CONDITIONS DO NOT REQUIRE FORMWORK. THE CONTRACTOR SHALL VERIFY SOIL CONDITIONS WITH A LICENSED GEOTECHNICAL ENGINEER AND OBTAIN APPROVAL BY THE ENGINEER OF RECORD PRIOR TO CONSTRUCTION. THE CONTRACTOR SHALL PLACE THESE STRUCTURES NEATLY WITHIN ACI 301 DIMENSION TOLERANCES, WITHOUT CONCRETE OVERPOUR SHELVES, AND SUCH THAT ALL REINFORCEMENT COVER AND SPACING REQUIREMENTS ARE PROVIDED.
20. EARTH FORMED SPREAD AND CONTINUOUS STRIP FOOTINGS ARE PROHIBITED.
21. SLOPE SLABS DOWN 1/4 INCH PER FOOT TO ALL FLOOR DRAINS.
22. PROVIDE 2 - #4 x 3'-0" TOP AND BOTTOM AT 45° ANGLE AT ALL REENTRANT CORNERS IN CONCRETE SLAB. PROVIDE THE BOTTOM LAYER OF REINFORCEMENT FOR SLABS GREATER THAN OR EQUAL TO SIX INCHES THICK.
23. PROVIDE 4 - #4 x 3'-0" AT ONE INCH CLEAR FROM TOP OF SLAB AT ALL DISCONTINUOUS CONTRACTION OR CONSTRUCTION JOINTS.
24. EXPANSION ANCHORS SHALL BE PLATED CARBON STEEL TORQUE CONTROLLED, WEDGE-TYPE MECHANICAL EXPANSION ANCHORS INSTALLED IN HARDENED CONCRETE, IN ACCORDANCE WITH MANUFACTURER SPECIFICATIONS, UNLESS NOTED OTHERWISE.
25. ADHESIVE ANCHORS SHALL BE AN ICC-ES APPROVED POST-INSTALLED SYSTEM FOR USE IN HARDENED, CRACKED AND UNCRACKED NORMAL WEIGHT CONCRETE HAVING A SPECIFIED COMPRESSIVE STRENGTH f_c', OF 2500 psi TO 8500 psi. THE SYSTEM SHALL CONSIST OF HIGH-STRENGTH STRUCTURAL ADHESIVE, ANCHOR ELEMENTS (CONTINUOUSLY THREADED RODS OR DEFORMED STEEL REINFORCING BARS), AND NORMAL WEIGHT CONCRETE. ADHESIVE ANCHORS SHALL BE INSTALLED PER MANUFACTURER SPECIFICATIONS UTILIZING THE ANCHOR ELEMENT SIZE AND MINIMUM EFFECTIVE EMBEDMENT INDICATED ON THE DRAWINGS. ADHESIVE ANCHORS SHALL BE INSTALLED IN CONCRETE HAVING A MINIMUM AGE OF 21 DAYS AT TIME OF ANCHOR INSTALLATION.
26. CONTRACTION JOINTS SHALL BE LOCATED ALONG COLUMN LINES, WITH INTERMEDIATE JOINTS LOCATED AT EQUAL SPACES BETWEEN COLUMN LINES, UNLESS OTHERWISE NOTED. CONTRACTION JOINT SPACING SHALL NOT EXCEED 30 TIMES THE SLAB THICKNESS, UNLESS OTHERWISE APPROVED BY THE ENGINEER OF RECORD.
27. ISOLATION JOINTS SHALL BE PLACED BETWEEN THE SLAB AND ADJOINING BUILDING ELEMENTS AS DETAILED AND OTHERWISE NOTED. ISOLATION JOINTS SHALL BE PLACED AT JUNCTIONS WITH WALLS, COLUMNS, EQUIPMENT FOUNDATIONS, FOOTINGS, OR OTHER POINTS OF RESTRAINT SUCH AS DRAINS, MANHOLES, SUMPS, AND STAIRWAYS.
28. EXPANSION AND ISOLATION JOINT MATERIAL TO BE PREFORMED, FLEXIBLE CLOSED CELL FOAM PLANK THE FULL THICKNESS OF THE SLAB.
29. VAPOR BARRIER TO BE ASTM E1745, CLASS A PLASTIC SHEET VAPOR BARRIER WITH A MINIMUM THICKNESS OF 10 MILS AND JOINT LAPPED NOT LESS THAN SIX INCHES, UNLESS OTHERWISE SPECIFIED BY ARCHITECTURAL SPECIFICATIONS.

General Notes

1. ALL CONSTRUCTION SHALL CONFORM WITH THE PROVISIONS OF THE CURRENTLY ADOPTED IBC, OSHA, AND ALL STATE AND LOCAL CODES AND THEIR SUPPLEMENTS. ALL WORK SHALL BE PERFORMED IN ACCORDANCE WITH FEDERAL, STATE AND LOCAL OR OTHER GOVERNING BODIES' CODES. ADDITIONALLY, ALL WORK SHALL BE COMPLETED IN ACCORDANCE WITH APPLICABLE INDUSTRY STANDARDS OR GUIDELINES AND CONFORM WITH AIA DOCUMENT A201 "GENERAL CONDITIONS OF THE CONTRACT FOR CONSTRUCTION".
2. THE CONTRACTOR SHALL SUPPLY ALL MATERIAL SAFETY DATA SHEETS (MSDS) FOR CHEMICALS BROUGHT ONTO THE SITE.
3. SHOP DRAWINGS, PRODUCT DATA, SAMPLES, AND SIMILAR SUBMITTALS ARE NOT PART OF THE CONTRACT DOCUMENTS. THE DESIGN PROFESSIONAL OF RECORD'S REVIEW AND APPROVAL OF SUCH SUBMITTALS IS STRICTLY FOR THE LIMITED PURPOSE OF CHECKING FOR CONFORMANCE WITH INFORMATION GIVEN AND THE DESIGN CONCEPT EXPRESSED IN THE CONTRACT DOCUMENTS. REVIEW OF SUCH SUBMITTALS IS NOT CONDUCTED FOR THE PURPOSE OF DETERMINING THE ACCURACY AND COMPLETENESS OF OTHER DETAILS SUCH AS DIMENSIONS AND QUANTITIES, OR FOR SUBSTANTIATING INSTRUCTIONS FOR INSTALLATION OR PERFORMANCE OF THE EQUIPMENT OR SYSTEMS, ALL OF WHICH REMAIN THE RESPONSIBILITY OF THE CONTRACTOR. THE DESIGN PROFESSIONAL OF RECORD'S REVIEW OF THE CONTRACTOR'S SUBMITTALS SHALL NOT RELIEVE THE CONTRACTOR OF THE OBLIGATIONS UNDER AIA DOCUMENT A201, SECTIONS 3.3, 3.5, AND 3.12 OF AIA A201. THE DESIGN PROFESSIONAL OF RECORD'S REVIEW SHALL NOT CONSTITUTE APPROVAL OF SAFETY PRECAUTIONS OR OF ANY CONSTRUCTION MEANS, METHODS, TECHNIQUES, SEQUENCES, OR PROCEDURES. THE DESIGN PROFESSIONAL OF RECORD'S APPROVAL OF A SPECIFIC ITEM SHALL NOT INDICATE APPROVAL OF AN ASSEMBLY OF WHICH THE ITEM IS A COMPONENT.
4. THE CONTRACTOR'S SUBMITTAL OF SHOP DRAWINGS, SAMPLES, AND SIMILAR SUBMITTALS REPRESENTS TO THE OWNER AND DESIGN PROFESSIONAL OF RECORD THAT THE CONTRACTOR HAS (1) REVIEWED AND APPROVED THEM, (2) DETERMINED AND VERIFIED MATERIALS, FIELD MEASUREMENTS AND FIELD CONSTRUCTION CRITERIA RELATED THERETO, OR WILL DO SO, AND (3) CHECKED AND COORDINATED THE INFORMATION CONTAINED WITHIN SUCH SUBMITTALS WITH THE REQUIREMENTS OF THE WORK AND OF THE CONTRACT DOCUMENTS.
5. THE CONTRACTOR SHALL FIELD CHECK AND VERIFY ALL DIMENSIONS AND ELEVATIONS OF EXISTING/PREVIOUSLY PHASED WORK PRIOR TO THE START OF FABRICATION AND CONSTRUCTION. NOTIFY DESIGN PROFESSIONAL OF RECORD OF ANY DISCREPANCIES.
6. ALL DIMENSIONS ARE TO FACE OF MASONRY, FACE OF CONCRETE, FACE OF EXISTING WALL AND/OR FACE OF NEW FRAMING. STRUCTURAL STEEL FRAMING DIMENSIONS ARE CENTER LINE DIMENSIONS.
7. INDICATED DIMENSIONS ARE TAKEN FROM CASUAL FIELD OBSERVATIONS AND EXISTING DRAWINGS. CONTRACTOR TO VERIFY ALL DIMENSIONS IN FIELD PRIOR TO CONSTRUCTION. CONTRACTOR TO NOTIFY DESIGN PROFESSIONAL OF RECORD OF ANY DISCREPANCIES. ALL CHANGES TO THE WORK SHALL BE APPROVED BY THE DESIGN PROFESSIONAL OF RECORD AND OWNER PRIOR TO PROCEEDING.
8. THE CONTRACTOR SHALL SECURE ALL NECESSARY LOCAL PERMITS REQUIRED FOR IT'S WORK.
9. THE CONTRACTOR SHALL BE RESPONSIBLE FOR DETERMINING THE LOCATION OF ANY UTILITIES IN THE VICINITY OF THE CONSTRUCTION (UNDERGROUND OR OTHERWISE) AND SHALL COMPLETE THE CONSTRUCTION IN A MANNER WHICH WILL PREVENT DAMAGE TO THEM. SHOULD ANY DAMAGE TO SUCH UTILITIES OCCUR, THE CONTRACTOR SHALL REPAIR THE DAMAGE AT ITS OWN EXPENSE AND TO THE SATISFACTION OF THE OWNER.
10. COORDINATE ALL WORK WITH MECHANICAL, ELECTRICAL, CIVIL, STRUCTURAL, ARCHITECTURAL DRAWINGS AND TRADES. VERIFY EXACT SIZE AND LOCATION OF ALL WALL, FLOOR AND ROOF OPENINGS REQUIRED OF THESE AND OTHER TRADES.
11. THE GENERAL CONTRACTOR SHALL BE RESPONSIBLE FOR COORDINATING CONSTRUCTION EFFORTS OF ALL SUB-CONTRACTORS. FAILURE TO ANTICIPATE CHANGES OR MODIFICATIONS SHALL NOT BE THE BASIS FOR ADDITIONAL COST REQUESTS.
12. CONTRACTORS SHALL COORDINATE THEIR WORK WITH THE OTHER TRADES. EXTRAS WILL NOT BE GIVEN FOR FORESEEABLE WORK COORDINATION.
13. REFER TO EQUIPMENT SCHEDULES AND SPECIFICATIONS FOR INSTALLATION REQUIREMENTS.
14. PROTECT ALL EQUIPMENT, BUILDING, AND PAVEMENTS, NEW AND EXISTING, FROM DEBRIS AND DAMAGE. FINAL CLEAN-UP OF ALL EQUIPMENT, BUILDINGS AND PAVEMENTS SHALL BE COMPLETED PRIOR TO SUBSTANTIAL COMPLETION.

Structural Design Criteria

1. RISK CATEGORY II: MAIN BUILDING AND COLD STORAGE
   a. SNOW IMPORTANCE FACTOR, I_s = 1.00
   b. ICE IMPORTANCE FACTOR - THICKNESS, I_i = 1.00
   c. ICE IMPORTANCE FACTOR - WIND, I_w = 1.00
   d. SEISMIC IMPORTANCE FACTOR, I_e = 1.00
2. RISK CATEGORY I: SALT BARN
   a. DESIGN ENGINEER TO DETERMINE MINIMUM UNIFORM SNOW LOAD AND OTHER CRITERIA
3. FLOORS, ROOFS, AND OTHER SIMILAR SURFACES ARE DESIGNED TO SUPPORT SAFELY THE LISTED UNIFORMLY DISTRIBUTED LIVE LOAD (psf) OR THE CONCENTRATED LOAD (lb), WHICHEVER PRODUCES THE GREATER LOAD EFFECTS.
4. ROOF LIVE LOAD, L_r = 20 psf / 300 lb
5. FLOOR LIVE LOAD, L:
   a. IT ROOM/OFFICE = 50 psf / 2000 lb
   b. LOBBIES, MEETING ROOMS, CORRIDORS = 100 psf / 2000 lb
   c. MEZZANINE = 125 psf
   d. STAIRS = 100 psf / 300 lb
   e. PARTS AND SIGNAGE = 100 psf / 2000 lb
   f. MAINTENANCE AREA = 250 psf / 8,000 lb (4.5 in BY 4.5 in AREA)
6. CONCENTRATED LOADS ON FLOORS, ROOFS, AND SIMILAR SURFACES ARE ASSUMED TO BE UNIFORMLY DISTRIBUTED OVER AN AREA 2.5 ft BY 2.5 ft.
7. CONCENTRATED LOADS ON STAIR TREADS ARE ASSUMED TO BE UNIFORMLY DISTRIBUTED OVER AN AREA 2 in BY 2 in.
8. GROUND SNOW LOAD, p_g = 25 psf
9. MINIMUM UNIFORM SNOW LOAD, $p_m = I_s p_g$ = 20 psf
10. SNOW EXPOSURE FACTOR, C_e = 0.9
11. THERMAL FACTOR,
    ADMIN. /MAINT. /TRUCK PARKING: C_t = 1.0
    SALT BARN / COLD STORAGE: C_t = 1.2
12. FLAT ROOF SNOW LOAD, $p_f = (0.7) C_e C_t I_s p_g$
    ADMIN. /MAINT. /TRUCK PARKING: p_f = 16.8 psf
    SALT BARN / COLD STORAGE: p_f = 18.9 psf
13. ROOF SLOPE FACTOR, C_s = 1.0
14. SLOPED ROOF SNOW LOAD, $p_s = C_s p_f$
    ADMIN. /MAINT. /TRUCK PARKING: p_s = 16.8 psf
    SALT BARN / COLD STORAGE: p_s = 18.9 psf
15. UNBALANCED SNOW LOAD, DRIFTING SNOW LOAD, AND SLIDING SNOW LOAD PER ASCE 7.
    a. SURCHARGE LOAD DUE TO DRIFTING SHALL BE ADDED TO THE BALANCED SNOW LOAD, ps, AS A STRIP RUNNING PARALLEL TO THE EAVES WITH A MAXIMUM INTENSITY AT THE EVE EDGE AND TAPERING LINEARLY TO 0 psf ACROSS THE STRIP.
       - ADMIN. - NORTH EDGE: 38 psf MAX, OVER 8'-10" STRIP
       - ADMIN. - EAST EDGE: 78 psf MAX, OVER 18'-0" STRIP
       - ADMIN. - SOUTH EDGE: 65 psf MAX, OVER 15'-0" STRIP
       - ADMIN. - WEST EDGE: 42 psf MAX, OVER 9'-7" STRIP
       - SEE ASCE 7-10, FIGURE 7-8, "CONFIGURATION OF SNOW DRIFTS ON LOWER ROOFS".
    b. NO SLIDING SNOW LOADS APPLY.
16. RAIN-ON-SNOW SURCHARGE = 0 psf
17. DESIGN WIND SPEED, V = 115 mph
18. WIND EXPOSURE CATEGORY C
19. INTERNAL PRESSURE COEFFICIENT, GC_{pi} = +/- 0.18
20. MAPPED SPECTRAL RESPONSE ACCELERATION PARAMETERS:
    a. SHORT PERIODS, S_S = 0.117g
    b. 1-SECOND PERIODS, S_1 = 0.063g
21. SITE CLASS D
22. DESIGN SPECTRAL RESPONSE ACCELERATION PARAMETERS:
    a. SHORT PERIODS, S_{DS} = 0.124g
    b. 1-SECOND PERIODS, S_{D1} = 0.101g
23. SEISMIC DESIGN CATEGORY B
24. SEISMIC FORCE-RESISTING SYSTEM: STEEL SYSTEM NOT SPECIFICALLY DETAILED FOR SEISMIC RESISTANCE.
25. RESPONSE MODIFICATION COEFFICIENT, R = 3
26. SEISMIC ANALYSIS BY EQUIVALENT LATERAL FORCE PROCEDURE.

Soil Notes

1. BUILDING AREA FOUNDATIONS AND FLOOR SLABS ARE TO BE CONSTRUCTED BY CONVENTIONAL METHODS OVER SOILS IMPROVED BY THE INSTALLATION OF RAMMED AGGREGATE PIERS.
2. THE CONTRACTOR SHALL HIRE A SPECIALTY CONTRACTOR WITH A PROVEN RECORD OF PERFORMANCE THAT DELIVERS THEIR WORK ON A DESIGN-BUILD BASIS TO DESIGN AND INSTALL THE RAMMED AGGREGATE PIERS. THE SPECIALTY CONTRACTOR SHALL COORDINATE THE SIZE, DEPTH, AND SPACING OF THE PIERS WITH THE FOUNDATION PLANS AND LOADING SCHEDULES. SEALED RAMMED AGGREGATE PIER PLANS, DETAILS AND SUPPORTING CALCULATIONS SHALL BE SUBMITTED FOR REVIEW TO THE ENGINEER OF RECORD.
3. FOUNDATIONS ARE DESIGNED FOR A MINIMUM BEARING CAPACITY OF 2500 psf FOR SPREAD FOOTINGS AND 2000 psf FOR STRIP FOOTINGS. FLOOR SLABS ARE DESIGNED FOR A STIFFNESS RATIO, $R_s = k_g/k_m$ = 20.
4. THE OWNER SHALL HIRE A REGISTERED GEOTECHNICAL ENGINEER TO INSPECT AND APPROVE EXCAVATION SUBGRADE, BEARING SURFACES, BACKFILL MATERIAL, AND BACKFILL COMPACTION. THE REGISTERED GEOTECHNICAL ENGINEER SHALL VERIFY THAT THE BEARING CAPACITY AND MODULUS OF SUBGRADE REACTION OF THE SOIL MEETS OR EXCEEDS THE MINIMUM BEARING CAPACITY AND MODULUS OF SUBGRADE REACTION UTILIZED FOR THE FOUNDATION DESIGN. AGGREGATE PIER TESTING IS BY CONTRACTOR. SHOULD CONDITIONS PROVE OTHERWISE, CONTACT THE ENGINEER OF RECORD AND PROCEED AS DIRECTED.
5. REFER TO THE GEOTECHNICAL REPORT FOR INFORMATION REGARDING SITE PREPARATION, FOUNDATION EXCAVATIONS, STRUCTURAL BACK FILL, COMPACTION REQUIREMENTS, SUITABLE BACK FILL MATERIAL, AND GROUNDWATER. THE GROUNDWATER LEVEL FOR THIS PROJECT IS HIGH.
6. EXTERIOR/UNHEATED AREA SLABS PLACED DIRECTLY UPON SOILS SUBJECT TO HEAVING AND SUBSEQUENT SETTLEMENT DUE TO FREEZE/THAW CYCLES SHALL BE LIMITEDLY UNDERCUT OF FROST SUSCEPTIBLE MATERIALS TO A DEPTH OF ONE TO TWO FEET BELOW THE SLAB, AND REPLACEMENT WITH WELL GRADED, PROPERLY PLACED AND COMPACTED GRANULAR SOILS.
7. DEWATERING WILL BE REQUIRED DURING CONSTRUCTION AND UNTIL THE CONCRETE FOUNDATIONS ARE SET. SEE GEOTECHNICAL REPORT.
8. THE CONTRACTOR SHALL PROVIDE ALL PROTECTION REQUIRED SO AS TO SAFEGUARD EXISTING UTILITIES.
9. LOCATE ALL UNDERGROUND UTILITIES PRIOR TO EXCAVATION.
10. UNLESS OTHERWISE SPECIFIED BY A LICENSED GEOTECHNICAL ENGINEER, THE CONTRACTOR SHALL COMPACT ALL STRUCTURAL FILL SUPPORTING FOUNDATIONS OR SLABS-ON-GRADE TO 100% OF THE MAXIMUM STANDARD PROCTOR DRY DENSITY (ASTM D-698) WITH MAXIMUM LIFTS OF 8 INCHES OR LESS. FILLS ADJACENT TO FOUNDATIONS AND OVER FOUNDATIONS SHALL BE COMPACTED TO 95% OF MAXIMUM STANDARD PROCTOR DRY DENSITY.

New Construction Work for :

Porter County Highway Department -
Central Facility

1955 IN-2
Valparaiso, IN 46385

PORTER COUNTY *Indiana*

MARTINRILEY
architects▪engineers

221 West Baker Street
Fort Wayne, Indiana 46802

pho 260.422.7994
fax 260.426.2067

JEREMY L. BRICKEY
No. 10809052
05/24/2024

REVISION:		DATE:
1	ADDENDUM 1	2024-06-12
2	ADDENDUM 3	2024-06-19

DRAWN BY: NMS
REVIEWED BY: JLB
COMMISSION NUMBER: F22146
DATE: 2024-05-24

S001

STRUCTURAL
SPECIFICATIONS

F22146 Porter County Highway Department - Central Facility
6/19/2024 [illegible]
C:\Users\SGilly\Documents\F22146 - Porter Co Hwy Complex - Valpo - STR_sgilly.rvt
SD/DD/CD

JOIST DESIGNATION	GRAVITY LOADS		MOMENT - LIVE LOAD[2] (k-ft)		MOMENT - WIND LOAD[3] (k-ft)		AXIAL CHORD FORCE[4]		REMARKS[5]
	TOTAL LOAD (plf)	LIVE LOAD[1] (plf)	+L	+R	+L	+R	FORCE (kip)	STIFFNESS (kip/in)	
22KSC3									
22K484/364	484	364							MFR DESIGN JOIST FOR CUSTOM UNIFORM LOADS INDICATED
22KSC4							±56.3		MFR DESIGN JOIST FOR THE ADDITIONAL TOP CHORD FORCE AND STIFFNESS IDENTIFIED
22KSP1	484	364			-56.3	-56.3			THE JOIST BOTTOM CHORD IS TO BE WELDED AFTER DEAD LOADS ARE APPLIED
22KSP2	242	182			-30.8	-30.8			THE JOIST BOTTOM CHORD IS TO BE WELDED AFTER DEAD LOADS ARE APPLIED

1. LIVE LOAD = MAXIMUM (Lr or S or R)
2. END MOMENT DUE TO EFFECTS OF RIGID FRAME ACTION CAUSED BY WELDING THE JOIST BOTTOM CHORD IN THE BRACED BAY AFTER DEAD LOADS ARE APPLIED
3. END MOMENTS DUE TO UNFACTORED WIND LOADS
4. KHJ/LKJ/LK
5. MFR = MANUFACTURER

8 Joist Schedule
1/4" = 1'-0"

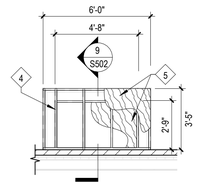

7 North Canopy
1/4" = 1'-0"

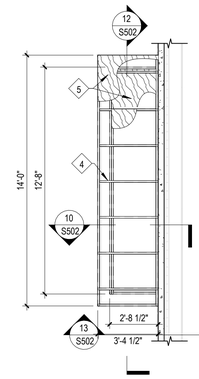

6 West Canopy
1/4" = 1'-0"

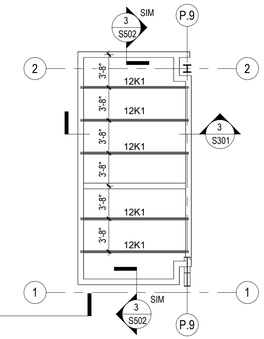

5 Electrical & Fire - Roof Deck
1/8" = 1'-0"

Work Description Notes

1. PROVIDE AND INSTALL 20KCS4 OPEN WEB STEEL JOISTS.
2. PROVIDE AND INSTALL 22K484/364 OPEN WEB STEEL JOISTS.
3. PROVIDE AND INSTALL 20KCS3 OPEN WEB STEEL JOISTS.
4. 600S200-33 COLD-FORMED STEEL CHANNEL SPACED AT 2'-0" ON CENTER
5. ½" WEATHER TREATED PLYWOOD TOP AND BOTTOM OF CANOPY

Cold-Formed Steel Notes

1. THIS SECTION APPLIES TO STRUCTURAL MEMBERS COLD-FORMED TO SHAPE FROM CARBON OR LOW-ALLOY STEEL SHEET, STRIP, PLATE, OR BAR NOT MORE THAN ONE INCH IN THICKNESS AND USED FOR LOAD-CARRYING PURPOSES.
2. COLD-FORMED STRUCTURAL MEMBERS SHALL BE MANUFACTURED FROM STEELS INTENDED FOR STRUCTURAL APPLICATIONS AS DEFINED IN GENERAL BY THE SPECIFICATIONS OF THE AMERICAN SOCIETY FOR TESTING AND MATERIALS (ASTM) LISTED IN SECTION A2 OF THE NORTH AMERICAN COLD-FORMED STEEL SPECIFICATION.
3. THE DESIGN BASE-METAL THICKNESS LISTED ON THE DRAWINGS IS THE MINIMUM UNCOATED BASE-METAL THICKNESS OF THE COLD-FORMED STEEL MEMBER.
4. THE MINIMUM UNCOATED BASE-METAL THICKNESS OF THE COLD-FORMED STEEL MEMBERS AS DELIVERED TO THE JOB SITE MUST BE AT LEAST 95% OF THE DESIGN BASE-METAL THICKNESS INDICATED ON THE DRAWINGS.
5. COLD-FORMED STEEL SECTIONS SHALL BE MANUFACTURED FROM STEEL WITH A YIELD POINT OF F_y = 50 ksi. CLIP ANGLES, BLOCKING, BRIDGING, AND STRAP BRACING SHALL BE F_y = 33 ksi.
6. UNLESS OTHERWISE INDICATED, NAMING CONVENTIONS USED THROUGHOUT THE DRAWINGS ARE AS FOLLOWS:
   a. DEPTH IN INCHES
   b. SECTION PROFILE:
      - C = C-SECTION
      - Z = Z-SECTION
      - L = EQUAL LEG ANGLE
      - H = HAT SECTION
   c. CODE FOR STIFFENED OR UNSTIFFENED FLANGES:
      - S = STIFFENED
      - U = UNSTIFFENED
   d. FLANGE WIDTH IN INCHES
   e. "x"
   f. THICKNESS IN 1/1000th INCHES
   g. EXAMPLE = 9CS3x075
7. THE BEND ANGLE FOR Z-SECTION FLANGE STIFFENERS SHALL BE 50 DEGREES AND HAVE THE LENGTHS, GENERALLY AS FOLLOWS:
   a. DEPTHS OF 12 INCHES THROUGH FOUR INCHES:
      - $t_{105/1000}$ = 0.990"
      - $t_{085/1000}$ = 0.960"
      - $t_{070/1000}$ = 0.930"
      - $t_{065/1000}$ = 0.920"
      - $t_{059/1000}$ = 0.910"
   b. DEPTHS OF 3-1/2 INCHES AND LOWER:
      - $t_{070/1000}$ = 0.680"
      - $t_{065/1000}$ = 0.670"
      - $t_{059/1000}$ = 0.660"
8. SCREWS SHALL BE THREAD-FORMING OR THREAD-CUTTING, WITH OR WITHOUT A SELF-DRILLING POINT AND INSTALLED AND TIGHTENED IN ACCORDANCE WITH THE MANUFACTURER SPECIFICATIONS.
9. SCREWS UTILIZED FOR THE CONNECTION OF COLD-FORMED STEEL MEMBERS SHALL CONFORM TO THE FOLLOWING DIMENSIONAL REQUIREMENTS:
   a. #6 SCREW.....0.138"Ø, 0.272" HEAD
   b. #8 SCREW.....0.164"Ø, 0.272" HEAD
   c. #10 SCREW.....0.190"Ø, 0.340" HEAD
   d. #12 SCREW.....0.216"Ø, 0.340" HEAD
   e. 1/4" SCREW.....0.250"Ø, 0.409" HEAD
10. STEEL DECK IS TO BE MANUFACTURED FROM STEEL CONFORMING TO ASTM A653 FOR GALVANIZED DECK AND FINISHED WITH A MINIMUM G60 COATING.
11. STEEL DECK CONSTRUCTION SHALL COMPLY TO THE LATEST EDITION OF THE STEEL DECK INSTITUTE'S "MANUAL OF CONSTRUCTION WITH STEEL DECK" AND IN ACCORDANCE WITH SDI SPECIFICATIONS.
12. ALL DECK TO BE THREE OR MORE SPANS CONTINUOUS WHERE POSSIBLE.
13. 1-1/2 INCH WIDE RIB (WR) DECK SHALL BE MANUFACTURED FROM STEEL WITH A YIELD POINT OF F_y = 50 ksi AND CONFORM TO THE FOLLOWING MINIMUM DECK PROFILE SECTION PROPERTIES:
   a. ROOF/MEZZANINE DECK DESIGN THICKNESS (WR20) = 0.0358 in
      - I = 0.198 in^4/ft
      - S_t = 0.226 in^3/ft
      - S_b = 0.237 in^3/ft
14. FASTEN 1-1/2 INCH WIDE RIB DECK TO ITS SUPPORT WITH 5/8-INCH ARC SPOT WELDS AT 36/4 PATTERN AND FASTEN SIDE LAPS WITH (2) #10 SCREWS PER SPAN.
15. ELECTRODES FOR WELDED JOINTS TO BE E60.
16. FILLET WELD SIZE IS TO BE THE THICKNESS OF THE THINNEST WELDED SHEET.

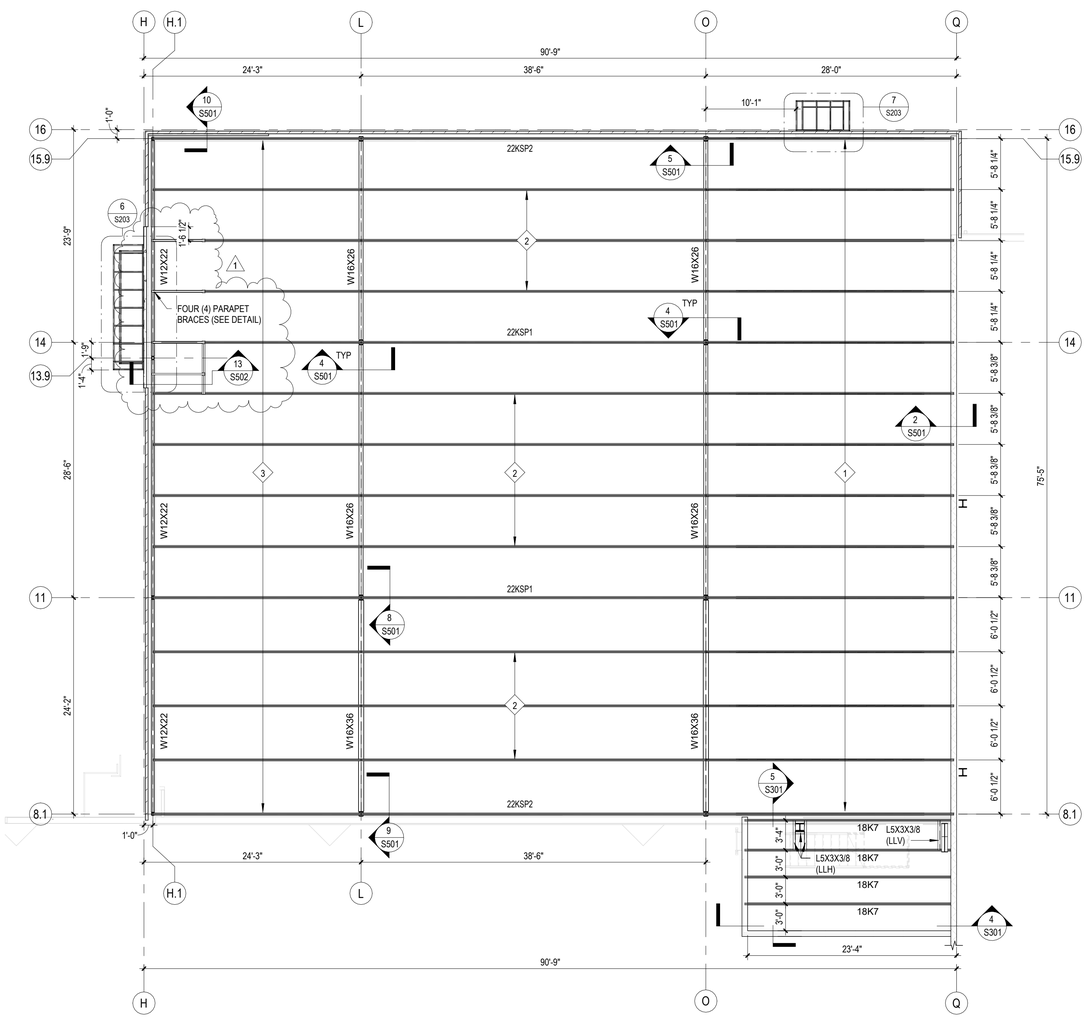

2 Office Roof
1/8" = 1'-0"

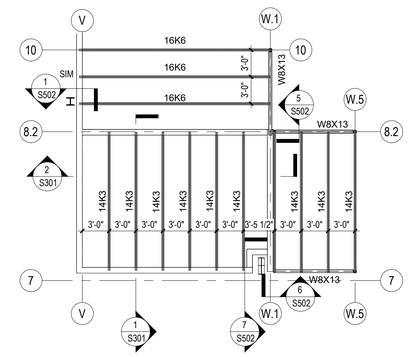

4 Mezzanine
1/8" = 1'-0"

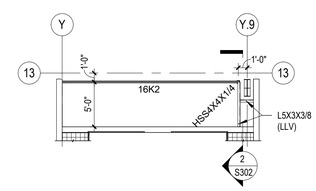

3 Catwalk Framing
1/8" = 1'-0"

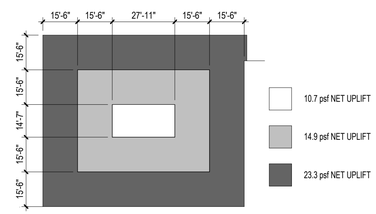

1 Office Roof - Joist Uplift Diagram
1/32" = 1'-0"

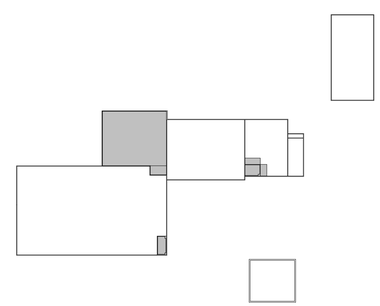

KEY PLAN

New Construction Work for :

Porter County Highway Department - Central Facility

1955 IN-2
Valparaiso, IN 46385

PORTER COUNTY Indiana

MARTIN RILEY
architects • engineers

221 West Baker Street
Fort Wayne, Indiana 46802
pho 260.422.7994
fax 260.426.2067

JEFFREY L. BRUCKER
REGISTERED
No. 10800002
05/24/2024
STATE OF INDIANA
PROFESSIONAL ENGINEER

REVISION:		DATE:
1	ADDENDUM 3	2024-06-19

DRAWN BY: NMS
REVIEWED BY: JLB
COMMISSION NUMBER: F22146
DATE: 2024-05-24

S203

FRAMING PLAN

F22146 - Porter County Highway Department - Central Facility
6/19/2024 3:44:13 PM
C:\Users\GRilly\Documents\F22146 - Porter Co Hwy Complex - Valpo - STR_sgrilly.rvt
SD/DD/CD

Work Description Notes

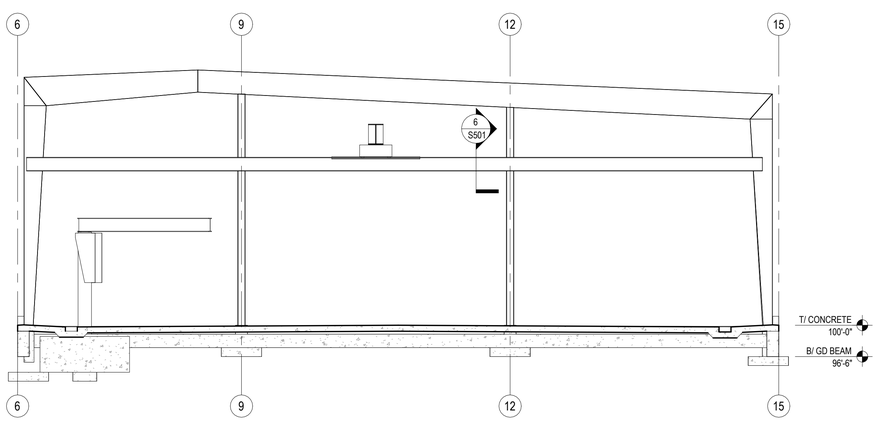

2 Maintenance Bay - Crane Section
1/8" = 1'-0"

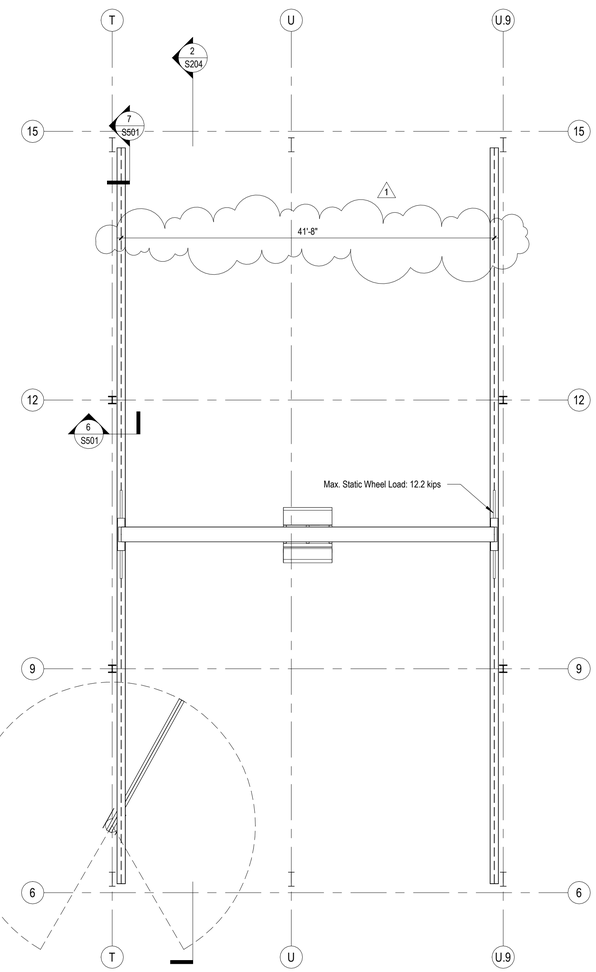

NORTH

1 Bridge Crane Plan
1/8" = 1'-0"

New Construction Work for :

Porter County Highway Department - Central Facility

1955 IN-2
Valparaiso, IN 46385

PORTER COUNTY Indiana

MARTIN RILEY
architects • engineers

221 West Baker Street
Fort Wayne, Indiana 46802

pho 260.422.7994
fax 260.426.2067

JEREMY L. BRINGER REGISTERED No. 10809004 05/24/2024 STATE OF INDIANA PROFESSIONAL ENGINEER

REVISION:		DATE:
1	ADDENDUM 3	2024-06-19

DRAWN BY: NMS
REVIEWED BY: JLB
COMMISSION NUMBER: F22146
DATE: 2024-05-24

S204

FRAMING PLAN

F22146 - Porter County Highway Department - Central Facility
6/19/2024 3:44:13 PM
C:\Users\SGrilly\Documents\F22146 - Porter Co Hwy Complex - Valpo - STR_sgrilly.rvt
SD/DD/CD

Work Description Notes

1 PLACE VAPOR BARRIER OVER CONCRETE LEDGE AS BOND BREAKER; TRIM EXCESS

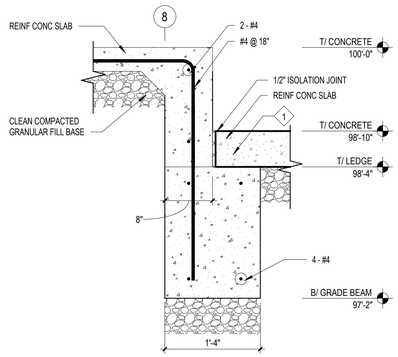

11 Admin. / Foreman Office - GB Step
1" = 1'-0"

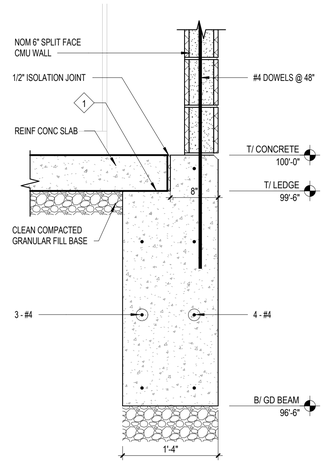

10 Admin Grade Beam (N&W)
1" = 1'-0"

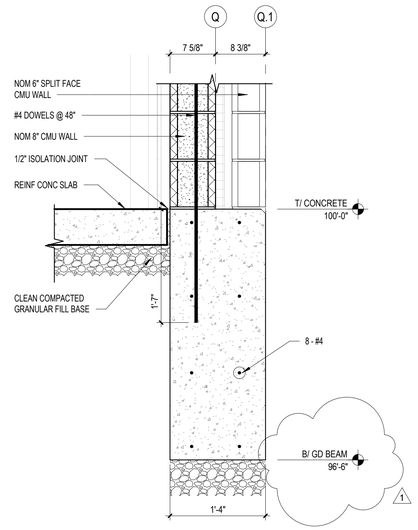

9 Admin. Grade Beam End
1" = 1'-0"

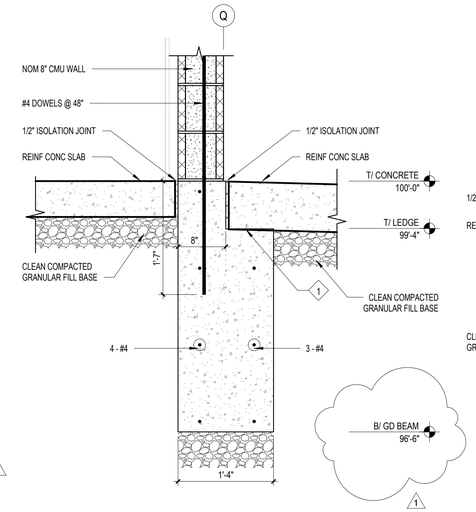

8 Admin. - Mech. Grade Beam
1" = 1'-0"

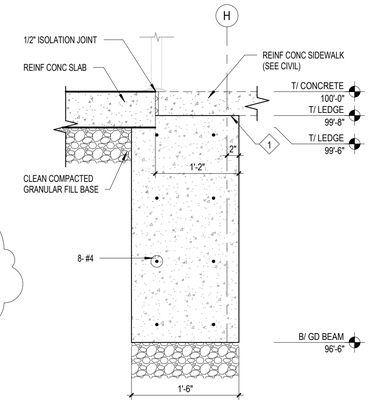

7 Admin. - Entry Grade Beam
1" = 1'-0"

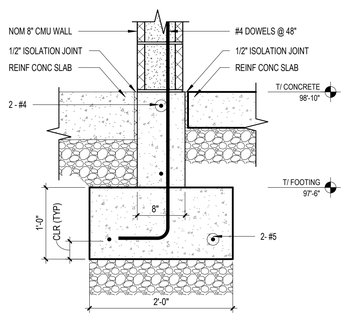

6 Forman Office - West w/o thickened slab
1" = 1'-0"

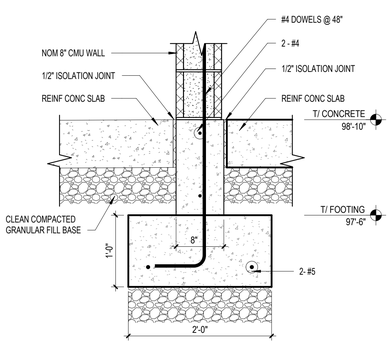

5 Fire & Elec. - W Wall
1" = 1'-0"

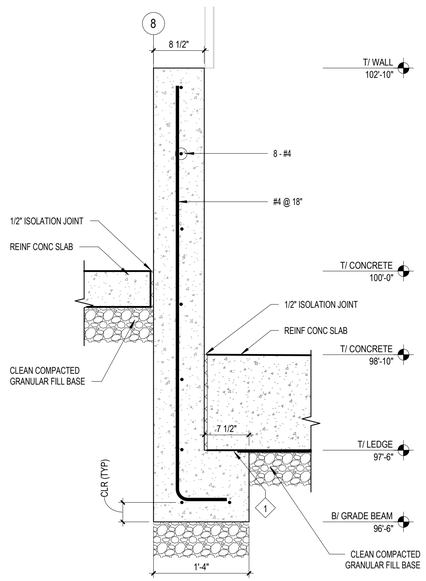

4 Truck Parking N. Wall - Admin
1" = 1'-0"

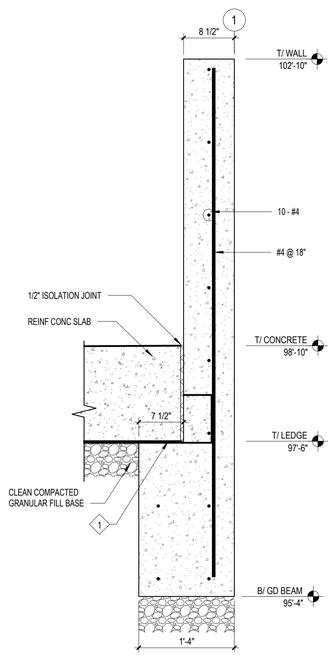

3 Truck Parking - outer wall N,S
1" = 1'-0"

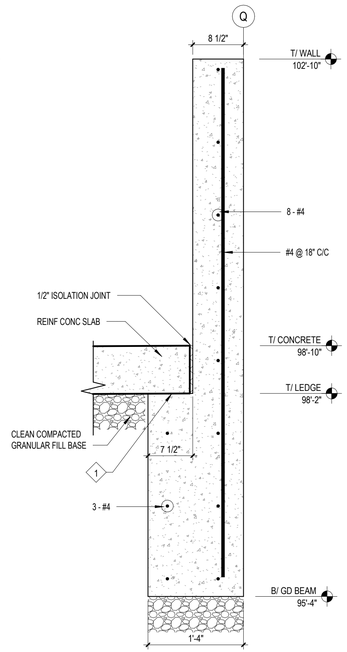

2 Truck Parking - outer wall E,W
1" = 1'-0"

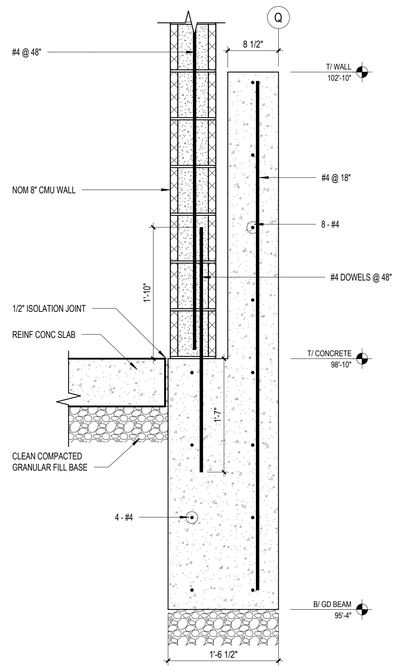

1 Fire & Elec. - S,E Walls
1" = 1'-0"

New Construction Work for :

Porter County Highway Department - Central Facility

1955 IN-2
Valparaiso, IN 46385

PORTER COUNTY Indiana

MARTIN RILEY
architects • engineers

221 West Baker Street
Fort Wayne, Indiana 46802
pho 260.422.7994
fax 260.426.2067

REVISION:		DATE:
1	ADDENDUM 3	2024-06-19

DRAWN BY:	NMS	REVIEWED BY:	JLB
COMMISSION NUMBER:	F22146	DATE:	2024-05-24

S403

FOUNDATION DETAILS

F22146 - Porter County Highway Department - Central Facility
6/19/2024 3:44:15 PM
C:\Users\SGilly\Documents\F22146 - Porter Co Hwy Complex - Valpo - STR_sgilly.rvt
SD/DD/CD

Work Description Notes

1 PROVIDE AND INSTALL 20 GA. 1-1/2" WR DECK WITH 36/4 FASTNER PATTERN, AND 2 CON/SPAN SIDE-LAP PATTERN. SEE SPECIFICATIONS ON SHEET S203

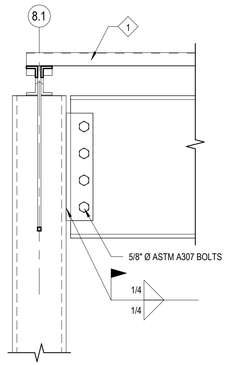

9 Shear Beam Connection
1 1/2" = 1'-0"

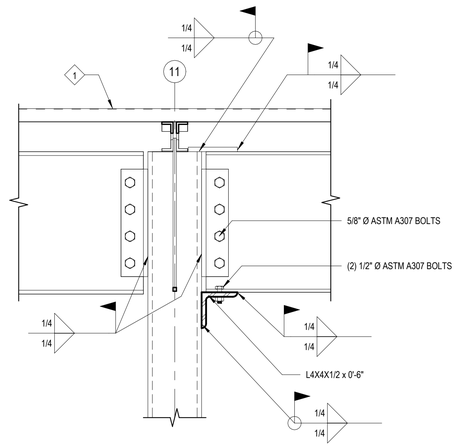

8 Shear And Moment Beam Connection
1 1/2" = 1'-0"

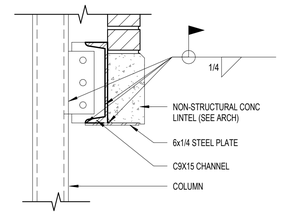

10 Lintel Connection at Column
1 1/2" = 1'-0"

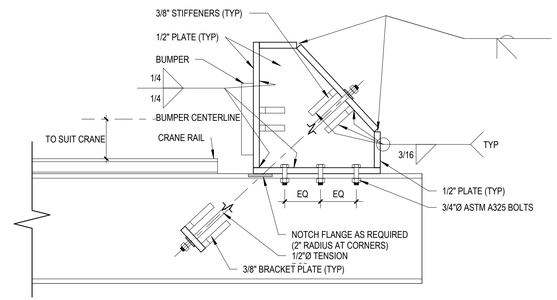

NOTE: GENERAL CONTRACTOR, BUILDING MANUFACTURER, AND CRANE MANUFACTURER TO COORDINATE REQUIRED CRANE LOADING REACTIONS.

7 Crane Stop
1" = 1'-0"

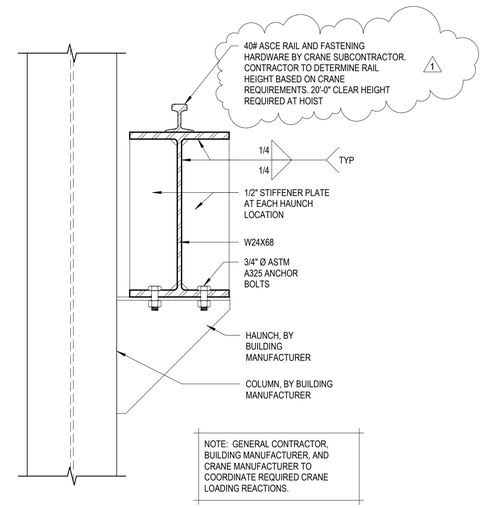

NOTE: GENERAL CONTRACTOR, BUILDING MANUFACTURER, AND CRANE MANUFACTURER TO COORDINATE REQUIRED CRANE LOADING REACTIONS.

6 Crane Rail Bracket
1 1/2" = 1'-0"

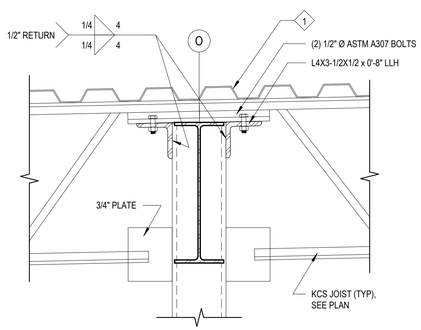

5 Typical Joist to Column Connection
1 1/2" = 1'-0"

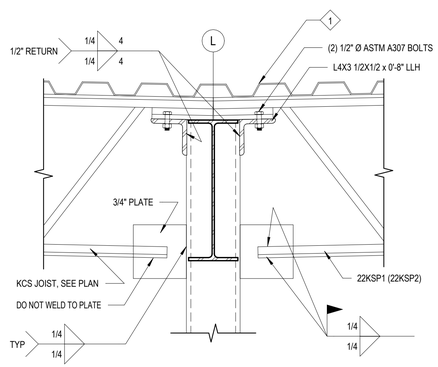

4 22KSP Joist to Column Connection
1 1/2" = 1'-0"

MARK	LOCATION	MATERIAL	TYPE	MASONRY OPENING	REMARKS
L1	MAIN ENTRANCE	L5X3-1/2X3/8 (LLV)		6'-0"	SINGLE ANGLE (SEE SECTION 1)
L2	CORNER GLASS-FRONT - WEST	C9x15 & 6"x1/4" PLATE		6'-8"	CHANNEL WITH PLATE WELDED ALONG EDGES (SEE SECTION 2)
L3	CORNER GLASS-FRONT - NORTH	C9x15 & 6"x1/4" PLATE		12'-9"	CHANNEL WITH PLATE WELDED ALONG EDGES (SEE SECTION 2)
L4	WINDOW LINTELS	6 x 8 REINF PRECAST CONCRETE LINTEL		2'-4"	GENERAL SIZE PRECAST CONCRETE LINTEL (SEE SECTION 3). SEE ARCHITECTURAL SECTIONS FOR FINISH DIMENSIONS AND COSMETIC REQUIREMENTS FOR LINTEL
L5	NORTH WALL PERSONNEL DOOR	6 x 8 REINF PRECAST CONCRETE LINTEL		3'-1"	GENERAL SIZE PRECAST CONCRETE LINTEL (SEE SECTION 3). SEE ARCHITECTURAL SECTIONS FOR FINISH DIMENSIONS AND COSMETIC REQUIREMENTS FOR LINTEL
L6	INT CMU WALL PERSONNEL DOOR	8 x 8 REINF CMU LINTEL		3'-4"	REINFORCED MASONRY LINTEL w/ 1- #4 REBAR @ 2" BTM CLR (SEE SECTION 5)
L7	INT CMU WALL OFFICE WINDOW	8 x 8 REINF CMU LINTEL		2'-8"	REINFORCED MASONRY LINTEL w/ 1- #4 REBAR @ 2" BTM CLR (SEE SECTION 4)
L8	INT CMU WALL PERSONNEL DOOR	8 x 8 REINF CMU LINTEL		4'-4"	REINFORCED MASONRY LINTEL w/ 1- #4 REBAR @ 2" BTM CLR (SEE SECTION 4)
L9	INT CMU WALL DOUBLE DOOR	8 x 16 REINF CMU LINTEL		6'-4"	REINFORCED MASONRY LINTEL w/ 1- #4 REBAR @ 2" BTM CLR (SEE SECTION 5)
L10	INT CMU WALL OVERHEAD DOOR	8 x 8 REINF CMU LINTEL		8'-0"	REINFORCED MASONRY LINTEL w/ 1- #4 REBAR @ 2" BTM CLR (SEE SECTION 4)

1. PROVIDE A MINIMUM BEARING LENGTH OF EIGHT INCHES IN THE DIRECTION OF THE SPAN AT EACH END OF LINTEL.
2. PROVIDE SOLID CMU BEARING UNIT OR GROUT HOLLOW CORES SOLID AT EACH END OF LINTEL (SEE TYPICAL LINTEL BEARING DETAIL).
3. SEE MASONRY NOTES ON SHEET S100 FOR MINIMUM GROUT REQUIREMENTS AND SPECIFICATIONS.
4. GROUT UTILIZED FOR REINFORCED CMU LINTELS SHALL HAVE A MINIMUM COMPRESSIVE STRENGTH OF 3000 PSI.
5. REINFORCED CONCRETE MASONRY LINTELS SHALL HAVE A MINIMUM COMPRESSIVE STRENGTH, f'_m = 1500 psi.
6. PROVIDE FOR 2" COVER FOR PRECAST CONCRETE LINTELS EXPOSED TO EARTH OR WEATHER.
7. GRADE 60 REINFORCEMENT IS REQUIRED FOR ALL PRECAST CONCRETE LINTELS.
8. PRECAST CONCRETE LINTELS SHALL HAVE A MINIMUM COMPRESSIVE STRENGTH, f'_c = 3000 psi.
9. STEEL LINTELS EXPOSED TO EARTH OR WEATHER ARE TO BE GALVANIZED.

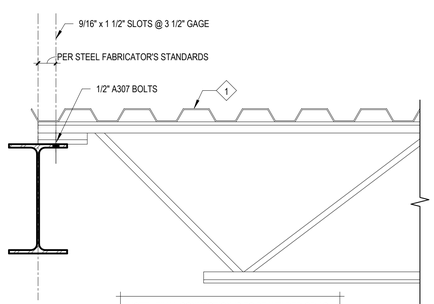

NOTE: FINAL CONNECTION IS TO BE WELDED OR AS DESIGNATED BY THE SPECIFYING PROFESSIONAL

3 Typical Joist Bearing
1 1/2" = 1'-0"

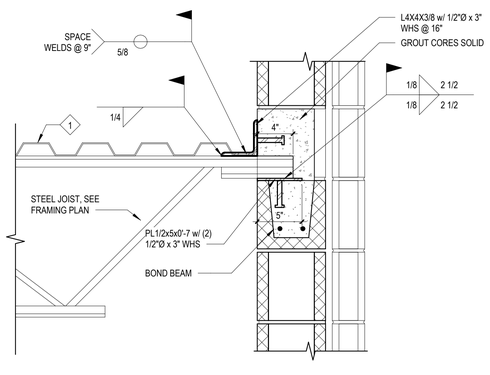

2 Joist Bearing in CMU Wall
1 1/2" = 1'-0"

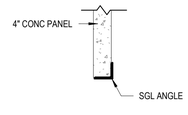

SECTION 1

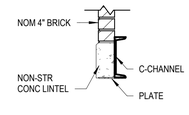

SECTION 2

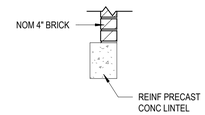

SECTION 3

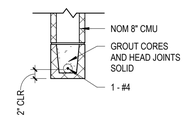

SECTION 4

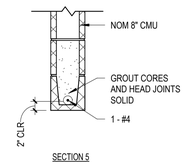

SECTION 5

1 Lintel Schedule
3/4" = 1'-0"

New Construction Work for :

Porter County Highway Department - Central Facility

1955 IN-2
Valparaiso, IN 46385

PORTER COUNTY Indiana

MARTIN RILEY
architects • engineers

221 West Baker Street
Fort Wayne, Indiana 46802

pho 260.422.7994
fax 260.426.2067

JEREMY L. BRUNDIGE REGISTERED No. 10802052 STATE OF INDIANA PROFESSIONAL ENGINEER

REVISION:		DATE:
1	ADDENDUM 3	2024-06-19

DRAWN BY:	NMS	REVIEWED BY:	JLB
COMMISSION NUMBER:	F22146	DATE:	2024-05-24

S501

STRUCTURAL DETAILS

F22146 Porter County Highway Department - Central Facility
6/19/2024 3:44:17 PM
C:\Users\SGrafly\Documents\F22146 - Porter Co Hwy Complex - Valpo - STR_sgrafly.rvt
SD/DD/CD

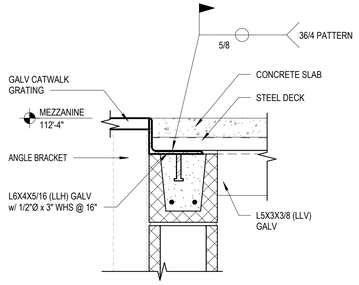

16 Wash Bay Catwalk Slab to Block
1 1/2" = 1'-0"

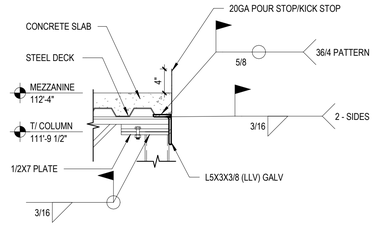

15 Washbay Catwalk - Joist to Column
1" = 1'-0"

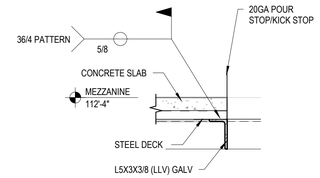

14 Wash Bay Catwalk Slab Cut-out
1" = 1'-0"

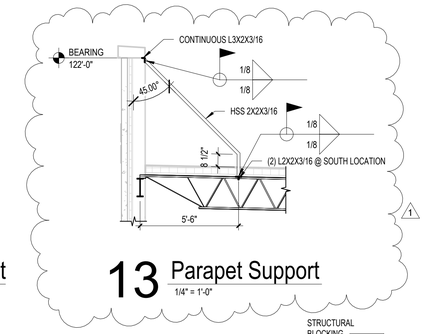

13 Parapet Support
1/4" = 1'-0"

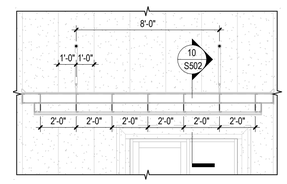

12 Embedded Anchors
1/4" = 1'-0"

LOCATION	TENSION LOAD (Kips)	SHEAR LOAD (Kips)
LOWER EMBEDDED ANCHOR	0.48	1.12

11 Embedded Anchor Loads
3/4" = 1'-0"

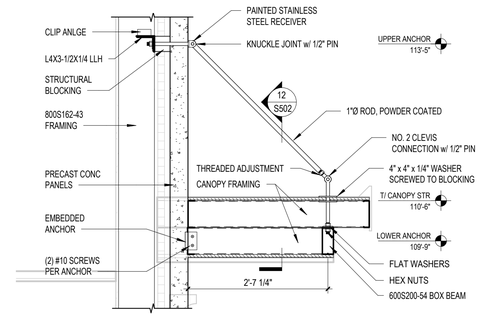

10 West Canopy Section
3/4" = 1'-0"

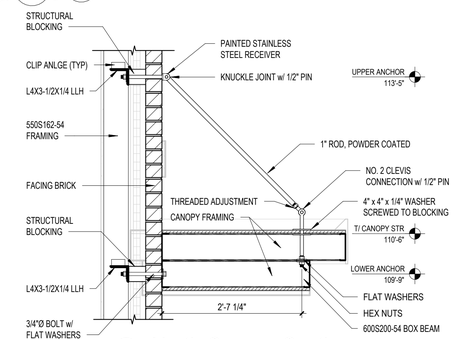

9 North Canopy Section
3/4" = 1'-0"

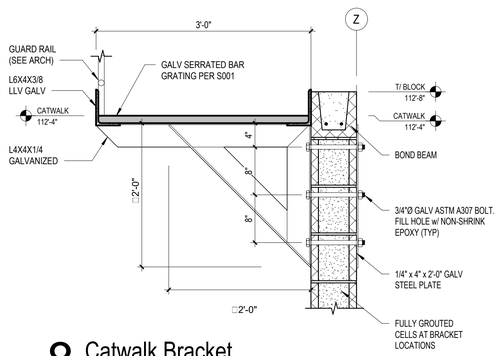

8 Catwalk Bracket
1" = 1'-0"

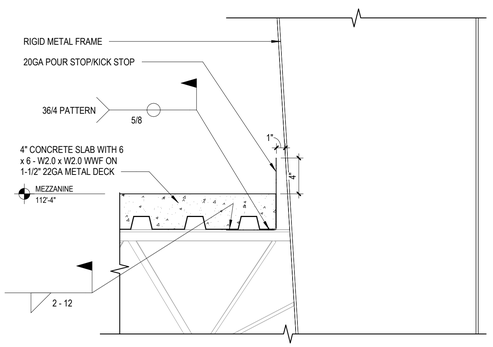

7 Mezzanine Column Stop
1 1/2" = 1'-0"

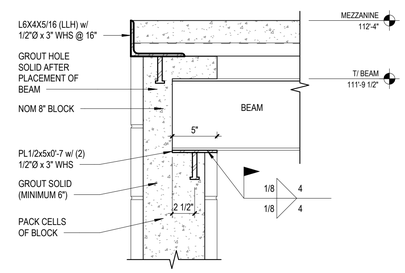

6 South Beam Bearing Detail
1 1/2" = 1'-0"

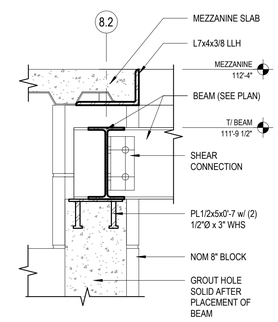

5 Beam Intersection Detail
1 1/2" = 1'-0"

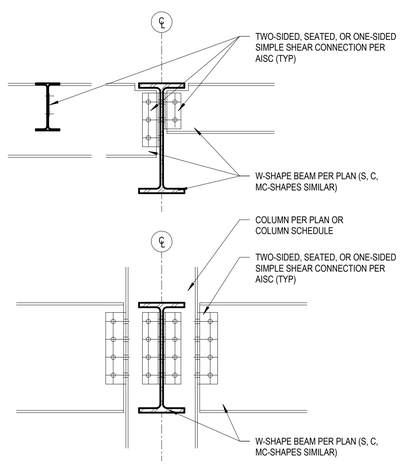

4 Simple Shear Connections
1" = 1'-0"

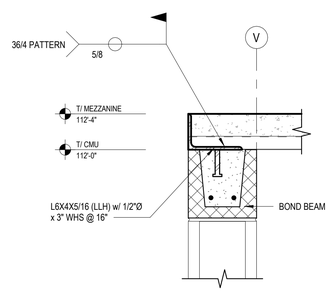

3 Mezzanine - Transverse Deck to Block
1 1/2" = 1'-0"

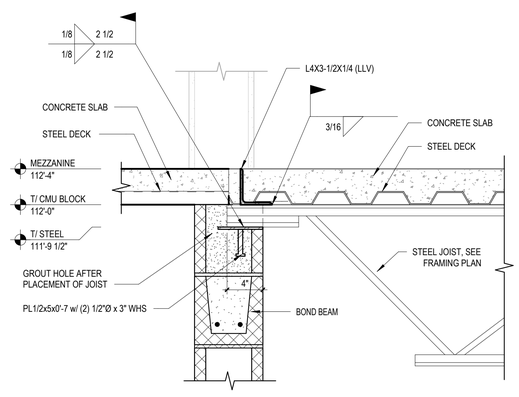

2 Mezzanine Transition
1 1/2" = 1'-0"

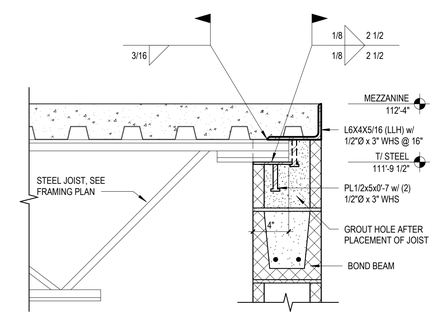

1 Mezzanine - Joist End
1 1/2" = 1'-0"

New Construction Work for :

Porter County Highway Department - Central Facility

1955 IN-2
Valparaiso, IN 46385

PORTER COUNTY Indiana

MARTIN RILEY
architects · engineers

221 West Baker Street
Fort Wayne, Indiana 46802
pho 260.422.7994
fax 260.426.2067

JEREMY L. BRICKER REGISTERED No. 10820052 05/24/2024 STATE OF INDIANA PROFESSIONAL ENGINEER

REVISION:		DATE:
1	ADDENDUM 3	2024-06-19

DRAWN BY: NMS
REVIEWED BY: JLB
COMMISSION NUMBER: F22146
DATE: 2024-05-24

S502

STRUCTURAL DETAILS

F22146 Porter County Highway Department - Central Facility
6/19/2024 3:44:17 PM
C:\Users\SCally\Documents\F22146 - Porter Co Hwy Complex - Valpo - STR_sgzlfly.rvt
SD/DD/CD