ADDENDUM
NO. 1

July 7, 2026

SCHOOL CITY OF HOBART VARSITY BASEBALL AND SOFTBALL TURF FIELDS PROJECT

TO: ALL BIDDERS OF RECORD

This Addendum forms a part of and modifies the Bidding Requirements, Contract Forms, Contract Conditions, the Specifications, and the Drawings dated June 29, 2026 by Gibraltar Design. Acknowledge receipt of the Addendum in the space provided on the Bid Form. Failure to do so may subject the Bidder to disqualification.

This Addendum consists of page ADD 1-1 and attached and attached Addendum No. 1 from Gibraltar Design dated July 7, 2026, consisting of 2 pages and 9 Drawings.

ADDENDUM ONE

Addendum One (AD.01) to the drawings and specifications prepared by Gibraltar Design for **Hobart High School Baseball and Softball Field Replacement and Related Work** for School City of Hobart, Hobart, Indiana.

All Contractors bidding on this project shall read all of the items covered below and shall comply with all of the requirements as set forth, including any necessary refinements or additions generated by this Addendum and required by the intent of the original contract documents. All Contractors shall acknowledge on their bid form that they have received this Addendum and include the appropriate content of same within their bid proposal.

SPECIFICATIONS

1. **Specification Section 32 18 12 Synthetic Turf System**

   A. Add additional criteria to Paragraph 2.2.B. as follows:

Standard	Property	Specification
ASTM D418/D5848	Pile Weight (Baseball/Softball – Red Clay Areas – Pitchers Mounds and Batters Halo/Box's)	Minimum 80 oz./sq. yd.

   B. Revise Criteria in Paragraph 2.2.B. where 'Brown Areas' is called out, change to 'Clay Red Areas'.

2. **Specification Section 32 31 13 Chain Link Fences and Gates**

   A. Delete Paragraph 1.1.C. in its entirety.

   B. Delete Paragraph 2.4.B.1. in its entirety.

   C. Add Paragraph 1.5.B.2. for clarification on Delegated Design Criteria, as follows:

   "2. Minimum Standard for Fence posts are included in Post Size Tables.

   Seismic Zone: 1

   Wind Speed: 110 Vmph

   Height: Refer to Drawings.

   Exposure: C

   Additional Factors: Ice, Windscreens, Soils Capacities, included in Geotech Report included in Project Manual."

DRAWINGS

3. **Sheet C-101**
   A. Refer to full-size drawing for revisions.
4. **Sheet C-102**
   A. Refer to full-size drawing for revisions.
5. **Sheet C-201**
   A. Additional Plan Note #29
   B. Revision to Softball Pitcher's Circle
6. **Sheet C-202**
   A. Revision to Plan Note #6
7. **Sheet C-301**
   A. Refer to full-size drawing for revisions.
8. **Sheet C-302**
   A. Refer to full-size drawing for revisions.
9. **Sheet C-400**
   A. Refer to full-size drawing for revisions.
10. **Sheet C-402**
    A. Refer to full-size drawing for revisions.
11. **Sheet ES102**
    A. Modifications to light pole locations for Varsity Baseball.

Pages 1 through 2, inclusive, and Nine (9) Full-Size Drawings, constitute the total makeup of **Addendum One**.

GIBRALTAR DESIGN

Joseph P. Briggs

Y:\26-122 SC Hobart - Hobart HS BB and SB FIELD REPLACEMENT\SPECS\AD01\AD01.DOCX

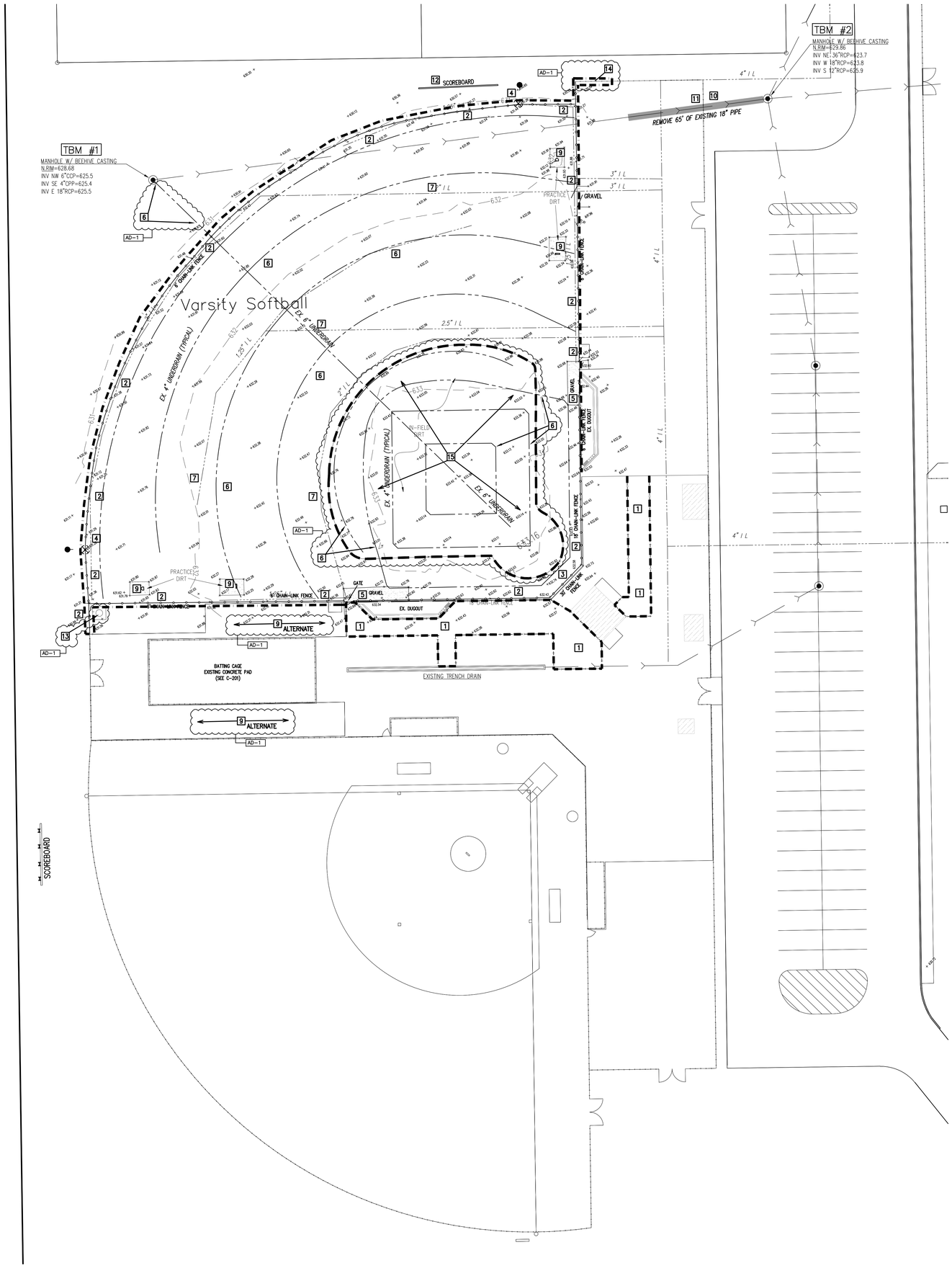

GENERAL DEMOLITION NOTES:

A. SITE SURVEY INFORMATION IS PROVIDED BY TORRENGA SURVEYING, LLC. CONTRACTOR IS TO VERIFY ALL ELEVATIONS AND NOTIFY CONSTRUCTION MANAGER AND ARCHITECT OF ANY DISCREPANCIES.
B. UNDERGROUND UTILITIES ARE SHOWN IN APPROXIMATE LOCATIONS BASED ON INFORMATION AT THE TIME OF SURVEY, AND SOME UTILITIES ARE NOT SHOWN. REGARDLESS OF SHOWN OR NOT, THE CONTRACTOR IS RESPONSIBLE FOR DETERMININING EXACT LOCATIONS OF ALL EXISTING UNDERGROUND UTILITIES TO REMAIN AND REPAIRING OR REPLACING ANY DAMAGE DUE TO CONSTRUCTION ACTIVITY. CONTRACTOR IS TO NOTIFY CM AND ARCHITECT OF ANY DISCREPANCIES.
C. THE LOCATION OF THE IRRIGATION SPRINKLER SYSTEM AND SUB SURFACE (UNDERDRAIN) SEWER SYSTEM IS DEPICTED AS SHOWN ON THE 01/26/2006 DRAWING SET FOR THE HOBART HIGH SCHOOL PREPARED BY GIBRALTAR DESIGN. THE LOCATIONS SHOWN WERE PROPOSED AND ARE NOT AS-BUILT. THE LOCATIONS ARE APPROXIMATE AND SHOULD BE FIELD VERIFIED BY THE CONTRACTOR.
D. CONTRACTOR IS RESPONSIBLE FOR COSTS ASSOCIATED WITH DISCONNECTING, REMOVING, OR RELOCATING/RECONNECTING EXISTING UTILITIES ALONG WITH CONNECTING NEW UTILITIES ASSOCIATED WITH CONSTRUCTION SCOPE.
E. VALVES, MANHOLES, HAND-HOLES, UTILITY BOXES, AND SIMILAR STRUCTURES NOT DESIGNATED FOR REMOVAL, SHALL BE PROTECTED AND ADJUSTED TO NEW FINISH ELEVATIONS BY CONTRACTOR.
F. CONTRACTOR IS TO VERIFY ALL DIMENSIONS, VERTICALLY AND HORIZONTALLY BETWEEN EXISTING AND NEW CONSTRUCTION, AND NOTIFY CONSTRUCTION MANAGER/ARCHITECT IF ANY DISCREPANCIES.

DEMOLITION PLAN NOTES:

SAWCUT EXISTING CONCRETE AND REMOVE WITHIN THE OUTLINED AREA

AD-1
1 REMOVE EXISTING CONCRETE – INTENT IS ALONG CONTROL JOINTS
2 REMOVE EXISTING CHAIN LINK FENCE & GATE – COMPLETE
3 REMOVE EXISTING BACKSTOP FENCING – COMPLETE
4 REMOVE EXISTING FOUL BALL POLE COMPLETE
5 REMOVE GRAVEL AREA

AD-1
6 REMOVE UNDERDRAINAGE – CAP WHERE LEAVES FIELD/PATCH BASIN AT REMOVED CONNECTION
7 REMOVE APPROXIMATE LOCATION OF IRRIGATION SYSTEM WITHIN THE BALLFIELD – CAP LINES LEAVING FIELD–MARK ON DRAWING
8 REMOVE BALLFIELD AS REQUIRED FOR NEW FIELD
9 REMOVE PRACTICE/DIRT AREA
10 REMOVE AND REPAIR EXISTING FENCE IN KIND

AD-1
11 REMOVE EXISTING STORM SEWER PIPE – VERIFY LENGTH
12 REMOVE SCOREBOARD & RELOCATE
13 REMOVE FLAGPOLE AND STORE FOR REINSTALLATION
14 REMOVE EXISTING FENCING TO EXTENT NECESSARY FOR NEW FENCING INSTALLATION – CONNECT BACK INTO NEW FENCING ONCE COMPLETE
15 CONTRACTOR IS TO REMOVE GOOD CLAY FROM SOFTBALL/BASEBALL INFIELD AND DEPOSIT IT TO JV FIELD PER SKILLMAN DIRECTIVE

DEMOLITION PLAN NOTES:

1) THE CONTRACTOR IS TO REMOVE THE EXISTING SUB SURFACE DRAINAGE SYSTEM IN ITS ENTIRETY AND PREPARE AS REQUIRED FOR NEW ARTIFICIAL TURF SYSTEM (SEE GENERAL DEMOLITION NOTES REGARDING SUB SURFACE DRAINAGE SYSTEM LOCATIONS SHOWN ON THE PLAN SET).

2) THE CONTRACTOR IS TO REMOVE THE EXISTING IRRIGATION SYSTEM IN ITS ENTIRETY AND PREPARE AS REQUIRED FOR NEW ARTIFICIAL TURF SYSTEM (SEE GENERAL DEMOLITION NOTES REGARDING IRRIGATION LOCATIONS SHOWN ON THE PLAN SET).

3) THE CONTRACTOR IS TO REMOVE THE EXISTING CHAIN LINK FENCE IN ITS ENTIRETY. WHERE EXISTING FENCE IS IN CONCRETE SIDEWALK, PATCH AND REPAIR CONCRETE SIDEWALK TO MAKE LIKE NEW.

4) THE CONTRACTOR IS TO REMOVE THE MINIMUM AMOUNT OF EXISTING CONCRETE IN ORDER TO INSTALL NEW CONCRETE CURB.

LEGEND

EXISTING

- MANHOLE
- SANITARY MANHOLE
- CATCH BASIN/INLET
- FOUL BALL POLE
- POWER POLE
- LIGHT POLE
- WATER VALVE
- FIRE HYDRANT
- GAS VALVE
- PVC PIPING W/ SIZE (APPROX.)
- SPRINKLER HEADS
- CONTROL VALVE
- GATE VALVE
- WINTER BLOWOUT CONNECTION
- BACKFLOW PREVENTER
- GAS LINE
- ELECTRIC LINE
- CHAIN LINK FENCE
- UNDERDRAIN PIPE SYSTEM
- EXISTING SANITARY SEWER
- EXISTING STORM SEWER
- EXISITNG WATER MAIN
- CONTOUR
- EXISTING SPOT ELEVATION

NORTH
GRAPHIC SCALE
20 0 10 20 40 80
(IN FEET)
1 inch = 20 ft.

GIBRALTAR
DESIGN
ARCHITECTURE • ENGINEERING • INTERIOR DESIGN

PROJECT
HOBART HS BASEBALL AND SOFTBALL FIELD REPLACEMENT AND RELATED WORK
FOR:
SCHOOL CITY OF HOBART
32 E. 7TH STREET, HOBART, IN 46342

100% CONSTRUCTION DRAWINGS
06/29/2026

GIBRALTAR DESIGN
4030 Vincennes Rd, Suite 100,
Indianapolis, IN 46268
Homepage www.GibraltarDesign.com
Email: info@GibraltarDesign.com
Phone: (317) 580-5777

PROJECT 26-122
DATE 06/29/26
COORDINATED BY DCT
DRAWN BY DCT EM
CHECKED BY DCT

DONALD C. TORRENGA REGISTERED No. 19862 STATE OF INDIANA PROFESSIONAL ENGINEER

COPYRIGHT NOTICE:
THE CONCEPTS, DESIGNS, PLANS, DETAILS, ETC., SHOWN ON THIS DOCUMENT ARE THE PROPERTY OF GIBRALTAR DESIGN AND WERE CREATED FOR USE ON THIS SPECIFIC PROJECT. NONE OF THIS INFORMATION SHALL BE USED BY ANY PERSON OR FIRM FOR ANY PURPOSE WITHOUT THE EXPRESS WRITTEN CONSENT OF GIBRALTAR DESIGN. THE OWNER MAY RETAIN COPIES FOR INFORMATION AND REFERENCE IN CONNECTION ONLY WITH THIS PROJECT.

REVISIONS

MARK	DATE	ISSUED FOR
AD-1	07/07/26	ADDENDUM NO. 1

DRAWING
VARSITY SOFTBALL EXISTING CONDITION & DEMOLITION PLAN

PROJECT
HOBART HS BASEBALL & SOFTBALL FIELD REPLACEMENT AND RELATED WORK

© GIBRALTAR DESIGN

SHEET
C-101

Z:\2026-5017 Hobart High School BB & SB Fields\dwg\2026-5017.dwg 7/6/2026 12:04:32 PM CDT

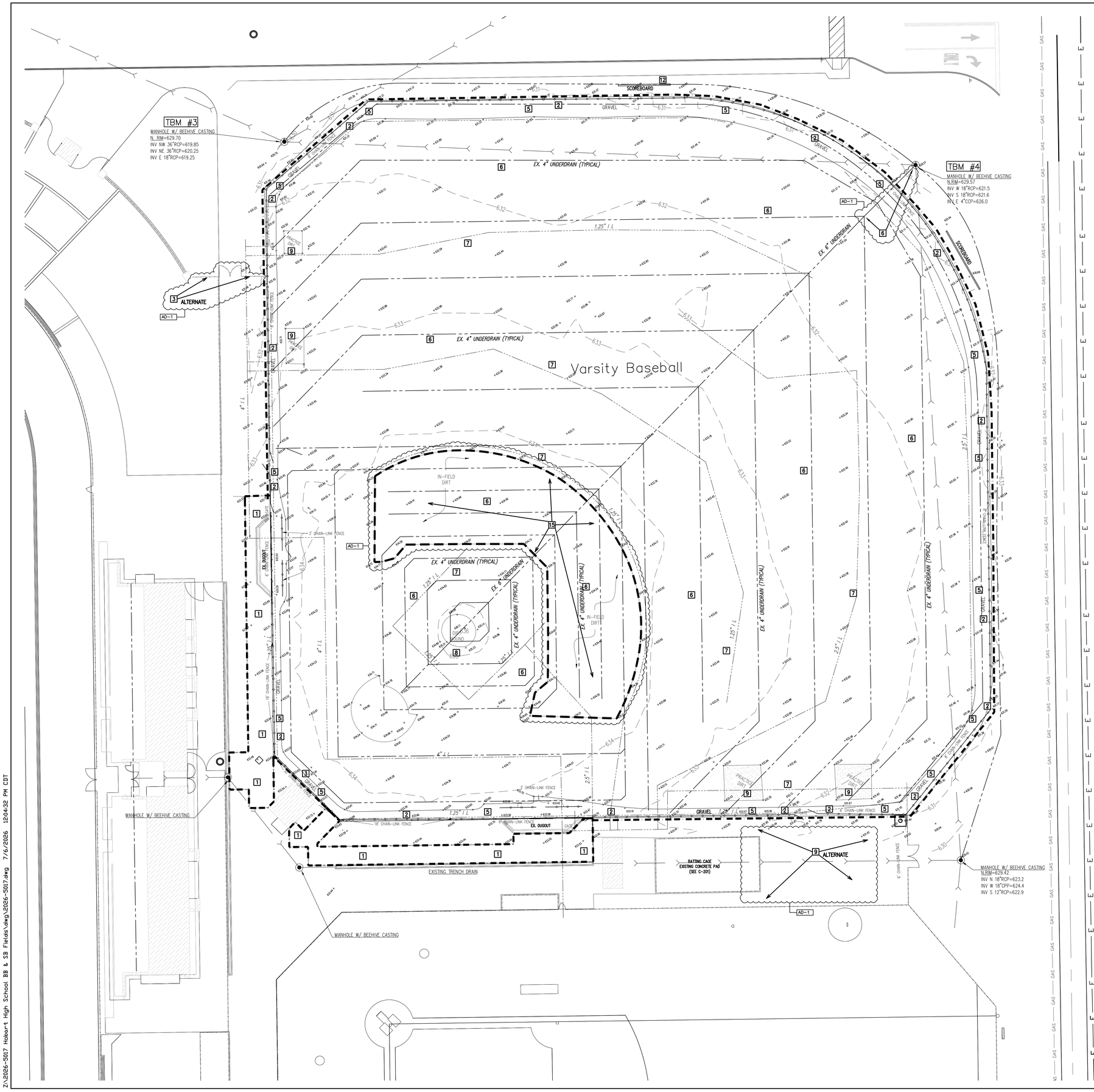

GENERAL DEMOLITION NOTES:

A. SITE SURVEY INFORMATION IS PROVIDED BY TORRENGA SURVEYING, LLC. CONTRACTOR IS TO VERIFY ALL ELEVATIONS AND NOTIFY CONSTRUCTION MANAGER AND ARCHITECT OF ANY DISCREPANCIES.
B. UNDERGROUND UTILITIES ARE SHOWN IN APPROXIMATE LOCATIONS BASED ON INFORMATION AT THE TIME OF SURVEY, AND SOME UTILITIES ARE NOT SHOWN. REGARDLESS OF SHOWN OR NOT, THE CONTRACTOR IS RESPONSIBLE FOR DETERMINING EXACT LOCATIONS OF ALL EXISTING UNDERGROUND UTILITIES TO REMAIN AND REPAIRING OR REPLACING ANY DAMAGE DUE TO CONSTRUCTION ACTIVITY. CONTRACTOR IS TO NOTIFY CM AND ARCHITECT OF ANY DISCREPANCIES.
C. THE LOCATION OF THE IRRIGATION SPRINKLER SYSTEM AND SUB SURFACE (UNDERDRAIN) SEWER SYSTEM IS DEPICTED AS SHOWN ON THE 01/26/2006 DRAWING SET FOR THE HOBART HIGH SCHOOL PREPARED BY GIBRALTAR DESIGN. THE LOCATIONS SHOWN WERE PROPOSED AND ARE NOT AS-BUILT. THE LOCATIONS ARE APPROXIMATE AND SHOULD BE FIELD VERIFIED BY THE CONTRACTOR.
D. CONTRACTOR IS RESPONSIBLE FOR COSTS ASSOCIATED WITH DISCONNECTING, REMOVING, OR RELOCATING/RECONNECTING EXISTING UTILITIES ALONG WITH CONNECTING NEW UTILITIES ASSOCIATED WITH CONSTRUCTION SCOPE.
E. VALVES, MANHOLES, HAND-HOLES, UTILITY BOXES, AND SIMILAR STRUCTURES NOT DESIGNATED FOR REMOVAL, SHALL BE PROTECTED AND ADJUSTED TO NEW FINISH ELEVATIONS BY CONTRACTOR.
F. CONTRACTOR IS TO VERIFY ALL DIMENSIONS, VERTICALLY AND HORIZONTALLY BETWEEN EXISTING AND NEW CONSTRUCTION, AND NOTIFY CONSTRUCTION MANAGER/ARCHITECT IF ANY DISCREPANCIES.

DEMOLITION PLAN NOTES:

SAWCUT EXISTING CONCRETE AND REMOVE WITHIN THE OUTLINED AREA

AD-1
1. REMOVE EXISTING CONCRETE – INTENT IS ALONG CONTROL JOINTS
2. REMOVE EXISTING CHAIN LINK FENCE & GATE – COMPLETE
3. REMOVE EXISTING BACKSTOP FENCING – COMPLETE
4. REMOVE EXISTING FOUL BALL POLE COMPLETE
5. REMOVE GRAVEL AREA

AD-1
6. REMOVE UNDERDRAINAGE – CAP WHERE LEAVES FIELD/PATCH BASIN AT PIPE CONNECTION
7. REMOVE APPROXIMATE LOCATION OF IRRIGATION SYSTEM WITHIN THE BALLFIELD – CAP LINES LEAVING FIELD–MARK ON DRAWING
8. REMOVE BALLFIELD
9. REMOVE PRACTICE/DIRT AREA
10. REMOVE STORM SEWER
11. REMOVE CATCH BASIN

AD-1
12. REMOVE SCOREBOARD & RELOCATE – REFER TO CIVIL LAYOUT DRAWING
13. REMOVE FLAGPOLE AND STORE FOR REINSTALLATION
14. REMOVE EXISTING FENCING TO EXTENT NECESSARY FOR NEW FENCING INSTALLATION – CONNECT BACK INTO NEW FENCING ONCE COMPLETE
15. CONTRACTOR IS TO REMOVE GOOD CLAY FROM SOFTBALL/BASEBALL INFIELD AND DEPOSIT IT TO JV FIELD PER SKILLMAN DIRECTIVE

DEMOLITION PLAN NOTES:

1) THE CONTRACTOR IS TO REMOVE THE EXISTING SUB SURFACE DRAINAGE SYSTEM IN ITS ENTIRETY AND PREPARE AS REQUIRED FOR NEW ARTIFICIAL TURF SYSTEM (SEE GENERAL DEMOLITION NOTES REGARDING SUB SURFACE DRAINAGE SYSTEM LOCATIONS SHOWN ON THE PLAN SET).

2) THE CONTRACTOR IS TO REMOVE THE EXISTING IRRIGATION SYSTEM IN ITS ENTIRETY AND PREPARE AS REQUIRED FOR NEW ARTIFICIAL TURF SYSTEM (SEE GENERAL DEMOLITION NOTES REGARDING IRRIGATION LOCATIONS SHOWN ON THE PLAN SET).

3) THE CONTRACTOR IS TO REMOVE THE EXISTING CHAIN LINK FENCE IN ITS ENTIRETY. WHERE EXISTING FENCE IS IN CONCRETE SIDEWALK, PATCH AND REPAIR CONCRETE SIDEWALK TO MAKE LIKE NEW.

4) THE CONTRACTOR IS TO REMOVE THE MINIMUM AMOUNT OF EXISTING CONCRETE IN ORDER TO INSTALL NEW CONCRETE CURB.

LEGEND
EXISTING

- MANHOLE
- SANITARY MANHOLE
- CATCH BASIN/INLET
- FOUL BALL POLE
- POWER POLE
- LIGHT POLE
- WATER VALVE
- FIRE HYDRANT
- GAS VALVE
- PVC PIPING W/ SIZE (APPROX.)
- SPRINKLER HEADS
- CONTROL VALVE
- GATE VALVE
- WINTER BLOWOUT CONNECTION
- BACKFLOW PREVENTER
- GAS LINE
- ELECTRIC LINE
- CHAIN LINK FENCE
- UNDERDRAIN PIPE SYSTEM
- EXISTING SANITARY SEWER
- EXISTING STORM SEWER
- EXISITNG WATER MAIN
- CONTOUR
- EXISTING SPOT ELEVATION (633.16 +)

NORTH
GRAPHIC SCALE
20 0 10 20 40 80
(IN FEET)
1 inch = 20 ft.

GIBRALTAR
DESIGN
ARCHITECTURE • ENGINEERING • INTERIOR DESIGN

PROJECT
HOBART HS BASEBALL AND SOFTBALL FIELD REPLACEMENT AND RELATED WORK

FOR:
SCHOOL CITY OF HOBART
32 E. 7TH STREET, HOBART, IN 46342

100% CONSTRUCTION DRAWINGS
06/29/2026

GIBRALTAR DESIGN
4030 Vincennes Rd, Suite 100,
Indianapolis, IN 46268
Homepage www.GibraltarDesign.com
Email: info@GibraltarDesign.com
Phone: (317) 580-5777

PROJECT 26-122
DATE 06/29/26
COORDINATED BY DCT
DRAWN BY DCT EM
CHECKED BY DCT

DONALD C. TORRENGA REGISTERED No. 19868 STATE OF INDIANA PROFESSIONAL ENGINEER

COPYRIGHT NOTICE:
THE CONCEPTS, DESIGNS, PLANS, DETAILS, ETC. SHOWN ON THIS DOCUMENT ARE THE PROPERTY OF GIBRALTAR DESIGN AND WERE CREATED FOR USE ON THIS SPECIFIC PROJECT. NONE OF THIS INFORMATION SHALL BE USED BY ANY PERSON OR FIRM FOR ANY PURPOSE WITHOUT THE EXPRESS WRITTEN CONSENT OF GIBRALTAR DESIGN. THE OWNER MAY RETAIN COPIES FOR INFORMATION AND REFERENCE IN CONNECTION ONLY WITH THIS PROJECT.

REVISIONS

MARK	DATE	ISSUED FOR
AD-1	07/07/26	ADDENDUM NO. 1

DRAWING
VARSITY BASEBALL EXISTING CONDITION & DEMOLITION PLAN

PROJECT
HOBART HS BASEBALL & SOFTBALL FIELD REPLACEMENT AND RELATED WORK

© GIBRALTAR DESIGN

SHEET
C-102

Z:\2026-5017 Hobart High School BB & SB Fields\dwg\2026-5017.dwg 7/6/2026 12:04:32 PM CDT

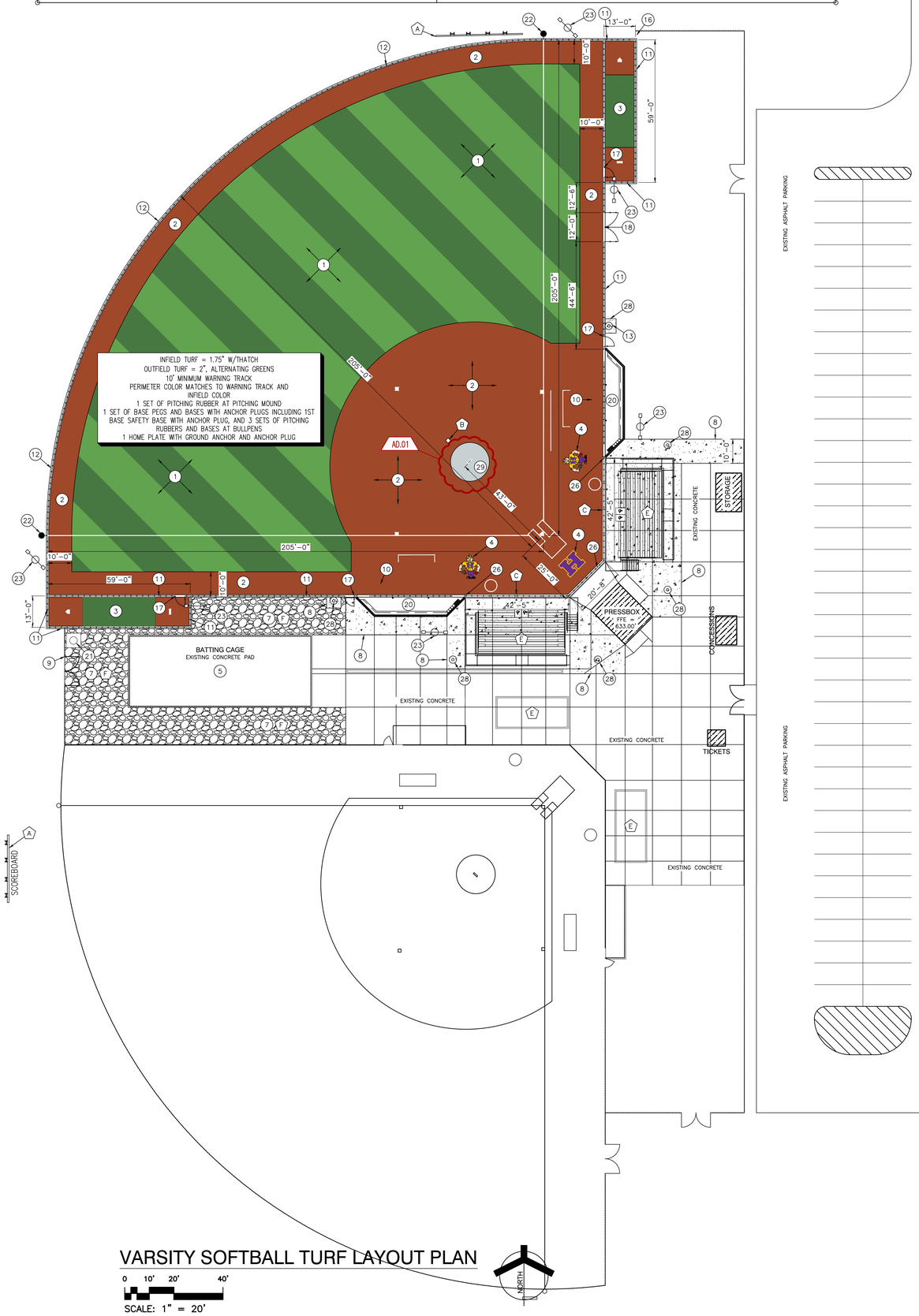

VARSITY SOFTBALL TURF LAYOUT PLAN

0 10' 20' 40'

SCALE: 1" = 20'

GENERAL DEMOLITION NOTES:

A. SITE SURVEY INFORMATION IS PROVIDED BY TORRENGA ENGINEERING. CONTRACTOR IS TO VERIFY ALL ELEVATIONS AND NOTIFY CONSTRUCTION MANAGER AND ARCHITECT OF ANY DISCREPANCIES.

B. UNDERGROUND UTILITIES ARE SHOWN IN APPROXIMATE LOCATIONS BASED ON INFORMATION AT THE TIME OF SURVEY. CONTRACTOR IS RESPONSIBLE FOR DETERMINING EXACT LOCATIONS OF ALL EXISTING UNDERGROUND UTILITIES TO REMAIN AND REPAIRING OR REPLACING ANY DAMAGE DUE TO CONSTRUCTION ACTIVITY. CONTRACTOR IS TO NOTIFY CM AND ARCHITECT OF ANY DISCREPANCIES.

B. CONTRACTOR IS TO MATCH UP TO ALL EXISTING CONCRETE SLABS, DUG-OUT WALLS/SLABS, ETC. TO THE GREATEST DEGREE POSSIBLE WHILE MAINTAINING TRUE ALIGNMENT OF THE PERIMETER LAYOUT OF FENCING.

C. CONTRACTOR IS REQUIRED TO MATCH EXISTING GRADES TO THE GREATEST DEGREE POSSIBLE – REFER TO GRADING PLANS.

D. CONTRACTOR IS RESPONSIBLE FOR COSTS ASSOCIATED WITH DISCONNECTING, REMOVING, OR RELOCATING/RECONNECTING EXISTING UTILITIES ALONG WITH CONNECTING NEW UTILITIES ASSOCIATED WITH CONSTRUCTION SCOPE.

E. VALVES, MANHOLES, HAND-HOLES, UTILITY BOXES, AND SIMILAR STRUCTURES NOT DESIGNATED FOR REMOVAL, SHALL BE PROTECTED AND ADJUSTED TO NEW FINISH ELEVATIONS BY CONTRACTOR.

F. CONTRACTOR IS TO VERIFY ALL DIMENSIONS, VERTICALLY AND HORIZONTALLY BETWEEN EXISTING AND NEW CONSTRUCTION, AND NOTIFY CONSTRUCTION MANAGER/ARCHITECT IF ANY DISCREPANCIES.

G. CONTRACTOR IS TO PROVIDE TOTAL ARTIFICIAL TURF INSTALL COMPLETE, NEW TURF, NEW TURF DRAINAGE SYSTEM, NEW INFILL, NEW 2X4 PERIMETER TREATED WOOD BLOCKING, AND NEW LOGOS/TEXT AS INDICATED.

H. CONTRACTOR IS TO COORDINATE AND PROVIDE FOR SUB-TURF ACCESS TO ANY EXISTING VALVES, HAND-HOLES, OR UTILITY BOXES AS REQUIRED.

LEGEND:

INDICATES AREA OF NEW CONCRETE SLAB FOR NEW SLAB ON GRADE OR INFILL AT FENCING, NETTING POLE LOCATION, ELECTRICAL RUNS.

INDICATES AREA OF NEW GRAVEL.

SITE LAYOUT NOTES

(ALL PLAN NOTES MAY NOT BE INDICATED ON THIS SHEET.)

1. PROVIDE NEW SYNTHETIC TURF AND SUB-BASE DRAINAGE SYSTEMS AS SPECIFIED. FULL PERIMETER CONCRETE CURB AND FENCING WITH 2X4 TREATED WOOD NAILER FOR TURF. — 1/C-401
2. NEW SYNTHETIC TURF AND SUB-BASE DRAINAGE SYSTEM AS SPECIED INFIELD AND WARNING TURF. — 3/C-401, 4/C-401, 7/C-401
3. ARTIFICIAL TURF BULLPEN.
4. INLAID TURF LOGO. REFER TO SPECIFICATIONS. — 5/C-401, 6/C-401
5. EXISTING BATTING CAGE TO REMAIN. PROVIDE NEW CARPET.
6. RAISED PITCHING MOUND – WITH CONCRETE SUB-BASE WITH FIBER REINFORCING IN LIEU OF STONE SUB-BASE. CONTOUR CONCRETE SUB-BASE SIMILAR TO STONE MOUND SLOPING AWAY FROM PITCHING RUBBER. PROVIDE INSERT FOR PITCHING RUBBER ANCHORAGE. SET CONTOURED CONCRETE INTEGRATED INTO A 4" CONCRETE SLAB BELOW MOUND ON A MINIMUM OF 4" STONE DRAINAGE FILL. — 12/C-402 — AD.01
7. NEW 4" OF #8 STONE IN THIS AREA.
8. NEW CONCRETE SLAB INFILL AND STONE BASE. — 6/C-402, 10/C-402
9. EXISTING FENCING TO REMAIN.
10. NEW 4'-0" TALL BLACK VINYL COATED FENCING SET IN CONCRETE. — 4/C-401
11. NEW 6'-0" TALL BLACK VINYL COATED FENCING SET IN PERIMETER CONCRETE CURB. — 1/C-401
12. RETAINING WALL NAILER CURB AT VARSITY SOFTBALL OUTFIELD WITH 6'-0" TALL BLACK VINYL FENCE. REFER TO GRADING PLAN. — 9/C-401
13. VARSITY BASEBALL DUGOUT FENCING. 3'-6" TALL BLACK VINYL COATED. — 3/C-401
14. VARSITY SOFTBALL DUGOUT FENCING. 3'-6" TALL BLACK VINYL COATED. PROVIDE OPENING ON BOTH ENDS OF EXISTING DUGOUT — 1/C-402
15. NEW 4'-0" BLACK VINYL COATED FENCING TIED INTO EXISTING.
16. NEW 6'-0" BLACK VINYL COATED FENCING TIED INTO EXISTING.
17. NEW 6'-0" HIGH BY 4'-0" WIDE BLACK VINYL COATED GATE TIED INTO DUGOUT CORNER. — 2/C-402
18. NEW 6'-0" HIGH BY 12'-0" WIDE BLACK VINYL COATED DOUBLE GATE. — 3/C-402
19. NEW 6'-0" HIGH BY 20'-0" WIDE SLIDING BLACK VINYL COATED GATE.
20. EXISTING DUGOUT. MASONRY WALL CONSTRUCTION WITH WOOD FRAMED ROOF TO REMAIN.
21. RELOCATE EXISTING SOFTBALL FLAG POLE TO THIS LOCATION. PROVIDE NEW FOUNDATION FOR EXISTING FLAGPOLE. — 7/C-402
22. NEW FOUL POLE. — 5/C-402
23. ATHLETIC LIGHTS, REFER TO ELECTRICAL.
24. EXISTING FLAGPOLE TO REMAIN
25. NEW 6'-0" TALL GALVANIZED FENCE TIED INTO EXISTING GALVANIZED FENCING
26. NEW 30'-0" BLACK NETTING BACKSTOP WITH SS CABLE SUPPORTS. — 7/C-401
27. NEW 40'-0" TALL BLACK NETTING BACKSTOP WITH SS CABLE SUPPORTS. — 7/C-401
28. APPROXIMATE LOCATION OF NEW NETTING POLE SUPPORT FOR BACKSTOP AND SAFETY NETTING SYSTEM OVER SPECTATOR SEATING AND CONCESSIONS. EXACT LOCATION OF NETTING POLES TO BE DETERMINED BY BACKSTOP NETTING DESIGNER AND ENGINEER. REFER TO SPECIFICATIONS TO DELEGATED DESIGN REQUIREMENTS.
29. CONCRETE SUB-BASE AT PITCHERS CIRCLE – PROVIDE 4" FLAT SLAB OF CONCRETE WITH FIBER MESH REINFORCEMENT, AND MINIMUM OF 4" COMPACTED DRAINAGE STONE BELOW SLAB. SIZE OF SLAB IS TO COVER SIZE OF STANDARD PITCHING CIRCLE. INSTALL PITCHING RUBBER INTO MOUND, PROVIDE INSET FOR PITCHING RUBBER ANCHORAGE. — 13/C-402 — AD.01

ALTERNATE - SITE LAYOUT NOTES

(ALL PLAN NOTES MAY NOT BE INDICATED ON THIS SHEET.)

A. SCOREBOARDS: REMOVE AND RELOCATE EXISTING VARSITY FIELD SCOREBOARDS TO JUNIOR VARSITY BALL FIELDS, PER SPECIFICATIONS.

PROVIDE NEW SCOREBOARD FOR VARSITY FIELDS, PER SPECIFICATIONS.

VARSITY BASEBALL: DEMO EXISTING BASEBALL SCOREBOARD, SUPPORTS, AND ELECTRICAL IN ITS ENTIRETY, NEW SCOREBOARD TO BE INSTALLED IN NEW LOCATION INDICATED ON LAYOUT PLAN.

VARSITY SOFTBALL: DEMO EXISTING SUPPORTS IN THEIR ENTIRETY AND PROVIDE NEW SUPPORTS FOR NEW BOARD AT EXISTING LOCATION.

JUNIOR VARSITY SOFTBALL AND BASEBALL: PROVIDE RELOCATED SCOREBOARDS ON TWO EXISTING SUPPORTS AND PROVIDE TWO NEW STRUCTURAL SUPPORTS FOR RELOCATED BOARDS, PER SPECIFICATIONS. CONTRACTOR IS TO PAINT ALL EXISTING STRUCTURAL STEEL THAT IS TO BE REUSED.

B. ELECTRIC POWER BOX SET IN SYNTHETIC TURF. REFER TO ELECTRICAL. — 1/C-402, 1/ES101

C. NEW MASONRY WALL FOR NETTING BACKSTOP — 8/C-401, 11/C-401

D. EMS ACCESS: PROVIDE NEW VEHICLE ACCESS RAMP ON EXISTING SIDEWALK. WIDEN EXISTING SIDEWALK BY 6'-0" WITH NEW CONCRETE WALK WITH TURN DOWN EDGE OF SLAB TO EXTENTS INDICATED DUE TO GRADE CHANGE. REFER TO GRADING PLAN. PROVIDE NEW 12'-0" DOUBLE BLACK VINYL COATED GATE IN NEW FENCE. — 6/C-402, 8/C-402, 10/C-402

E. GRANDSTANDS: RELOCATE EXISTING FIXED ALUMINUM GRANDSTANDS FROM VARSITY BALL FIELDS TO JUNIOR VARSITY FIELDS.

PROVIDE NEW GRANDSTANDS, ON EXISTING CONCRETE PAD, ELEVATED 4'-0" AT VARSITY SOFTBALL FIELD

PROVIDE NEW GRANDSTANDS, ON EXISTING CONCRETE PAD, AT VARSITY BASEBALL FIELD

F. PROVIDE NEW CONCRETE SLAB IN LIEU OF GRAVEL IN THIS LOCATION BETWEEN VARSITY AND JUNIOR VARSITY FIELDS.

GIBRALTAR
DESIGN
ARCHITECTURE • ENGINEERING • INTERIOR DESIGN

PROJECT
HOBART HS BASEBALL AND SOFTBALL FIELD REPLACEMENT AND RELATED WORK

FOR:
SCHOOL CITY OF HOBART
32 E. 7TH STREET, HOBART, IN 46342

100% CONSTRUCTION DRAWINGS
06/29/2026

GIBRALTAR DESIGN
4030 Vincennes Rd, Suite 100,
Indianapolis, IN 46268
Homepage www.GibraltarDesign.com
Email: info@GibraltarDesign.com
Phone: (317) 580-5777

PROJECT 26-122
DATE 06/29/26
COORDINATED BY JPB
DRAWN BY CND
CHECKED BY JPB

JOSEPH P. BRIGGS
REGISTERED
NO. 11600109
STATE OF INDIANA
ARCHITECT

COPYRIGHT NOTICE:
THE CONCEPTS, DESIGNS, PLANS, DETAILS, ETC, SHOWN ON THIS DOCUMENT ARE THE PROPERTY OF GIBRALTAR DESIGN AND WERE CREATED FOR USE ON THIS SPECIFIC PROJECT. NONE OF THIS INFORMATION SHALL BE USED BY ANY PERSON OR FIRM FOR ANY PURPOSE WITHOUT THE EXPRESS WRITTEN CONSENT OF GIBRALTAR DESIGN. THE OWNER MAY RETAIN COPIES FOR INFORMATION AND REFERENCE IN CONNECTION ONLY WITH THIS PROJECT.

REVISIONS

MARK	DATE	ISSUED FOR
AD.01	07/07/26	ADDENDUM NO. 01

DRAWING
VARSITY SOFTBALL TURF LAYOUT PLAN

PROJECT
HOBART HS BASEBALL & SOFTBALL FIELD REPLACEMENT AND RELATED WORK

© GIBRALTAR DESIGN

SHEET
C-201

Tuesday, 7/7/2026 – 7:49 AM – LAST SAVED BY:CDAVIS
Y:\26-122 SC HOBART – HOBART HS BB AND SB FIELD REPLACEMENT\26-122 CAD\03 SITE\C-201.DWG

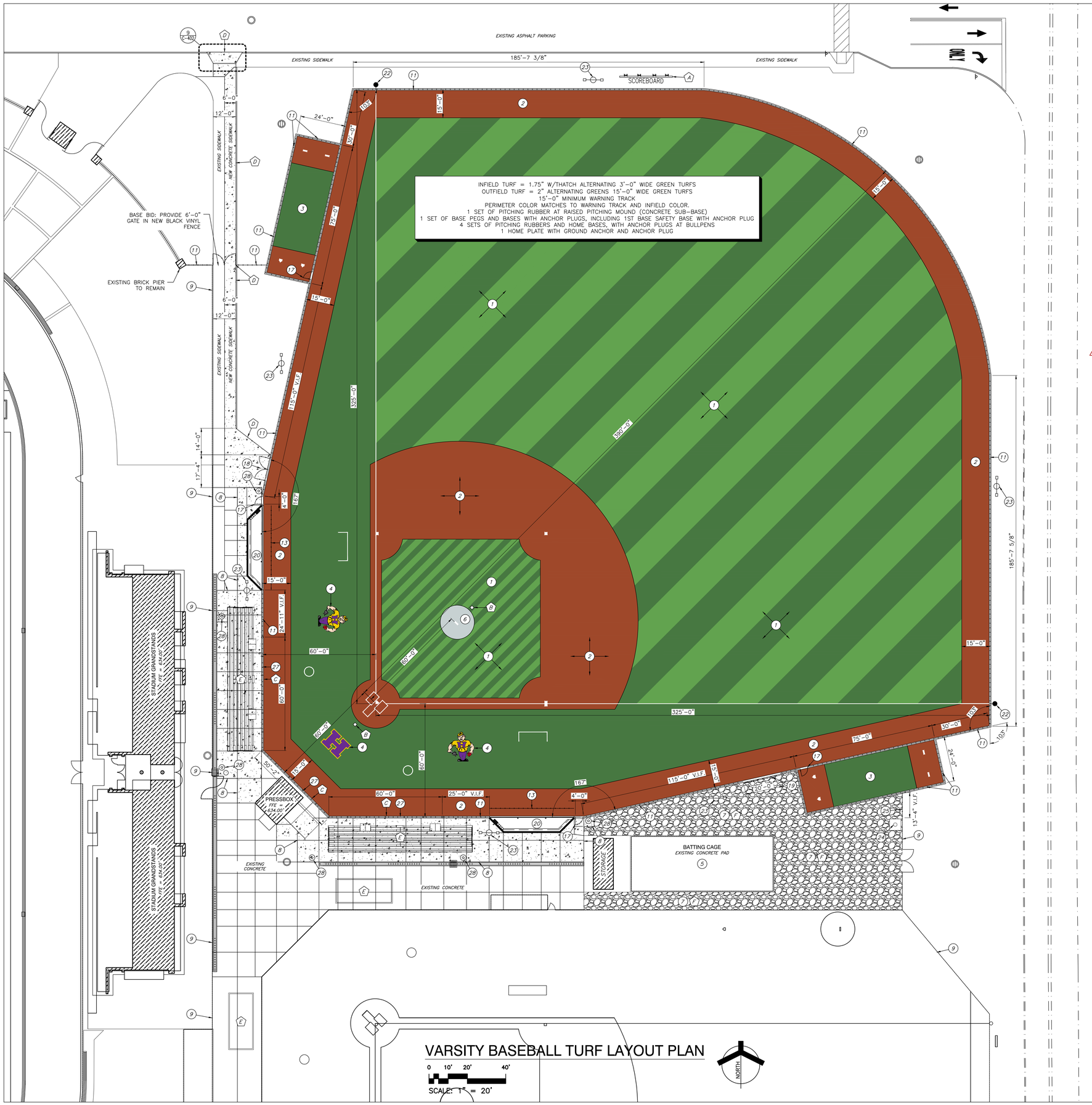

VARSITY BASEBALL TURF LAYOUT PLAN

0 10' 20' 40'

SCALE: 1" = 20'

GENERAL DEMOLITION NOTES:

A. SITE SURVEY INFORMATION IS PROVIDED BY TORRENGA ENGINEERING. CONTRACTOR IS TO VERIFY ALL ELEVATIONS AND NOTIFY CONSTRUCTION MANAGER AND ARCHITECT OF ANY DISCREPANCIES.

B. UNDERGROUND UTILITIES ARE SHOWN IN APPROXIMATE LOCATIONS BASED ON INFORMATION AT THE TIME OF SURVEY. CONTRACTOR IS RESPONSIBLE FOR DETERMINING EXACT LOCATIONS OF ALL EXISTING UNDERGROUND UTILITIES TO REMAIN AND REPAIRING OR REPLACING ANY DAMAGE DUE TO CONSTRUCTION ACTIVITY. CONTRACTOR IS TO NOTIFY CM AND ARCHITECT OF ANY DISCREPANCIES.

B. CONTRACTOR IS TO MATCH UP TO ALL EXISTING CONCRETE SLABS, DUG-OUT WALLS/SLABS, ETC. TO THE GREATEST DEGREE POSSIBLE WHILE MAINTAINING TRUE ALIGNMENT OF THE PERIMETER LAYOUT OF FENCING.

C. CONTRACTOR IS REQUIRED TO MATCH EXISTING GRADES TO THE GREATEST DEGREE POSSIBLE – REFER TO GRADING PLANS.

D. CONTRACTOR IS RESPONSIBLE FOR COSTS ASSOCIATED WITH DISCONNECTING, REMOVING, OR RELOCATING/RECONNECTING EXISTING UTILITIES ALONG WITH CONNECTING NEW UTILITIES ASSOCIATED WITH CONSTRUCTION SCOPE.

E. VALVES, MANHOLES, HAND-HOLES, UTILITY BOXES, AND SIMILAR STRUCTURES NOT DESIGNATED FOR REMOVAL, SHALL BE PROTECTED AND ADJUSTED TO NEW FINISH ELEVATIONS BY CONTRACTOR.

F. CONTRACTOR IS TO VERIFY ALL DIMENSIONS, VERTICALLY AND HORIZONTALLY BETWEEN EXISTING AND NEW CONSTRUCTION, AND NOTIFY CONSTRUCTION MANAGER/ARCHITECT IF ANY DISCREPANCIES.

G. CONTRACTOR IS TO PROVIDE TOTAL ARTIFICIAL TURF INSTALL COMPLETE, NEW TURF, NEW TURF DRAINAGE SYSTEM, NEW INFILL, NEW 2X4 PERIMETER TREATED WOOD BLOCKING, AND NEW LOGOS/TEXT AS INDICATED.

H. CONTRACTOR IS TO COORDINATE AND PROVIDE FOR SUB-TURF ACCESS TO ANY EXISTING VALVES, HAND-HOLES, OR UTILITY BOXES AS REQUIRED.

LEGEND:

INDICATES AREA OF NEW CONCRETE SLAB FOR NEW SLAB ON GRADE OR INFILL AT FENCING, NETTING POLE LOCATION, ELECTRICAL RUNS.

INDICATES AREA OF NEW GRAVEL.

SITE LAYOUT NOTES

(ALL PLAN NOTES MAY NOT BE INDICATED ON THIS SHEET.)

1. PROVIDE NEW SYNTHETIC TURF AND SUB-BASE DRAINAGE SYSTEMS AS SPECIFIED. FULL PERIMETER CONCRETE CURB AND FENCING WITH 2X4 TREATED WOOD NAILER FOR TURF. — 1/C-401
2. NEW SYNTHETIC TURF AND SUB-BASE DRAINAGE SYSTEM AS SPECIED INFIELD AND WARNING TURF. — 3/C-401, 4/C-401, 7/C-401
3. ARTIFICIAL TURF BULLPEN.
4. INLAID TURF LOGO. REFER TO SPECIFICATIONS. — 5/C-401, 6/C-401
5. EXISTING BATTING CAGE TO REMAIN. PROVIDE NEW CARPET.
6. RAISED PITCHING MOUND – WITH CONCRETE SUB-BASE WITH FIBER REINFORCING IN LIEU OF STONE SUB-BASE. CONTOUR CONCRETE SUB-BASE SIMILAR TO STONE MOUND SLOPING AWAY FROM PITCHING RUBBER. PROVIDE INSERT FOR PITCHING RUBBER ANCHORAGE. SET CONTOURED CONCRETE INTEGRATED INTO A 4" CONCRETE SLAB BELOW MOUND ON A MINIMUM OF 4" STONE DRAINAGE FILL. — 12/C-402 (AD.01)
7. NEW 4" OF #8 STONE IN THIS AREA.
8. NEW CONCRETE SLAB INFILL AND STONE BASE. — 6/C-402, 10/C-402
9. EXISTING FENCING TO REMAIN.
10. NEW 4'-0" TALL BLACK VINYL COATED FENCING SET IN CONCRETE. — 4/C-401
11. NEW 6'-0" TALL BLACK VINYL COATED FENCING SET IN PERIMETER CONCRETE CURB. — 1/C-401
12. RETAINING WALL NAILER CURB AT VARSITY SOFTBALL OUTFIELD WITH 6'-0" TALL BLACK VINYL FENCE. REFER TO GRADING PLAN. — 9/C-401
13. VARSITY BASEBALL DUGOUT FENCING. 3'-6" TALL BLACK VINYL COATED. — 3/C-401
14. VARSITY SOFTBALL DUGOUT FENCING. 3'-6" TALL BLACK VINYL COATED. PROVIDE OPENING ON BOTH ENDS OF EXISTING DUGOUT — 1/C-402
15. NEW 4'-0" BLACK VINYL COATED FENCING TIED INTO EXISTING.
16. NEW 6'-0" BLACK VINYL COATED FENCING TIED INTO EXISTING.
17. NEW 6'-0" HIGH BY 4'-0" WIDE BLACK VINYL COATED GATE TIED INTO DUGOUT CORNER. — 2/C-402
18. NEW 6'-0" HIGH BY 12'-0" WIDE BLACK VINYL COATED DOUBLE GATE. — 3/C-402
19. NEW 6'-0" HIGH BY 20'-0" WIDE SLIDING BLACK VINYL COATED GATE.
20. EXISTING DUGOUT. MASONRY WALL CONSTRUCTION WITH WOOD FRAMED ROOF TO REMAIN.
21. RELOCATE EXISTING SOFTBALL FLAG POLE TO THIS LOCATION. PROVIDE NEW FOUNDATION FOR EXISTING FLAGPOLE. — 7/C-402
22. NEW FOUL POLE. — 5/C-402
23. ATHLETIC LIGHTS, REFER TO ELECTRICAL.
24. EXISTING FLAGPOLE TO REMAIN
25. NEW 6'-0" TALL GALVANIZED FENCE TIED INTO EXISTING GALVANIZED FENCING
26. NEW 30'-0" BLACK NETTING BACKSTOP WITH SS CABLE SUPPORTS. — 7/C-401
27. NEW 40'-0" TALL BLACK NETTING BACKSTOP WITH SS CABLE SUPPORTS. — 7/C-401
28. APPROXIMATE LOCATION OF NEW NETTING POLE SUPPORT FOR BACKSTOP AND SAFETY NETTING SYSTEM OVER SPECTATOR SEATING AND CONCESSIONS. EXACT LOCATION OF NETTING POLES TO BE DETERMINED BY BACKSTOP NETTING DESIGNER AND ENGINEER. REFER TO SPECIFICATIONS TO RELOCATED DESIGN REQUIREMENTS.
29. CONCRETE SUB-BASE AT PITCHERS CIRCLE – PROVIDE 4" FLAT SLAB OF CONCRETE WITH FIBER MESH REINFORCEMENT, AND MINIMUM OF 4" COMPACTED DRAINAGE STONE BELOW SLAB. SIZE OF SLAB IS TO COVER SIZE OF STANDARD PITCHING CIRCLE. INSTALL PITCHING RUBBER INTO MOUND, PROVIDE INSET FOR PITCHING RUBBER ANCHORAGE. — 13/C-402 (AD.01)

ALTERNATE - SITE LAYOUT NOTES

(ALL PLAN NOTES MAY NOT BE INDICATED ON THIS SHEET.)

A. SCOREBOARDS: REMOVE AND RELOCATE EXISTING VARSITY FIELD SCOREBOARDS TO JUNIOR VARSITY BALL FIELDS, PER SPECIFICATIONS.

PROVIDE NEW SCOREBOARD FOR VARSITY FIELDS, PER SPECIFICATIONS.

VARSITY BASEBALL: DEMO EXISTING BASEBALL SCOREBOARD, SUPPORTS, AND ELECTRICAL IN ITS ENTIRETY, NEW SCOREBOARD TO BE INSTALLED IN NEW LOCATION INDICATED ON LAYOUT PLAN.

VARSITY SOFTBALL: DEMO EXISTING SUPPORTS IN THEIR ENTIRETY AND PROVIDE NEW SUPPORTS FOR NEW BOARD AT EXISTING LOCATION.

JUNIOR VARSITY SOFTBALL AND BASEBALL: PROVIDE RELOCATED SCOREBOARDS ON TWO EXISTING SUPPORTS AND PROVIDE TWO NEW STRUCTURAL SUPPORTS FOR RELOCATED BOARDS, PER SPECIFICATIONS. CONTRACTOR IS TO PAINT ALL EXISTING STRUCTURAL STEEL THAT IS TO BE REUSED.

B. ELECTRIC POWER BOX SET IN SYNTHETIC TURF. REFER TO ELECTRICAL. — 1/C-402, 1/ES101

C. NEW MASONRY WALL FOR NETTING BACKSTOP — 8/C-401, 11/C-401

D. EMS ACCESS: PROVIDE NEW VEHICLE ACCESS RAMP ON EXISTING SIDEWALK. WIDEN EXISTING SIDEWALK BY 6'-0" WITH NEW CONCRETE WALK WITH TURN DOWN EDGE OF SLAB TO EXTENTS INDICATED DUE TO GRADE CHANGE. REFER TO GRADING PLAN. PROVIDE NEW 12'-0" DOUBLE BLACK VINYL COATED GATE IN NEW FENCE. — 5/C-401, 6/C-401, 10/C-402

E. GRANDSTANDS: RELOCATE EXISTING FIXED ALUMINUM GRANDSTANDS FROM VARSITY BALL FIELDS TO JUNIOR VARSITY FIELDS.

PROVIDE NEW GRANDSTANDS, ON EXISTING CONCRETE PAD, ELEVATED 4'-0" AT VARSITY SOFTBALL FIELD

PROVIDE NEW GRANDSTANDS, ON EXISTING CONCRETE PAD, AT VARSITY BASEBALL FIELD

F. PROVIDE NEW CONCRETE SLAB IN LIEU OF GRAVEL IN THIS LOCATION BETWEEN VARSITY AND JUNIOR VARSITY FIELDS.

GIBRALTAR DESIGN
ARCHITECTURE • ENGINEERING • INTERIOR DESIGN

PROJECT
HOBART HS BASEBALL AND SOFTBALL FIELD REPLACEMENT AND RELATED WORK

FOR:
SCHOOL CITY OF HOBART
32 E. 7TH STREET, HOBART, IN 46342

100% CONSTRUCTION DRAWINGS
06/29/2026

GIBRALTAR DESIGN
4030 Vincennes Rd, Suite 100,
Indianapolis, IN 46268
Homepage www.GibraltarDesign.com
Email: info@GibraltarDesign.com
Phone: (317) 580-5777

PROJECT 26-122
DATE 06/29/26
COORDINATED BY JPB
DRAWN BY CND
CHECKED BY JPB

JOSEPH P. BRIGGS REGISTERED NO. 11600109 STATE OF INDIANA ARCHITECT

COPYRIGHT NOTICE:
THE CONCEPTS, DESIGNS, PLANS, DETAILS, ETC., SHOWN ON THIS DOCUMENT ARE THE PROPERTY OF GIBRALTAR DESIGN AND WERE CREATED FOR USE ON THIS SPECIFIC PROJECT. NONE OF THIS INFORMATION SHALL BE USED BY ANY PERSON OR FIRM FOR ANY PURPOSE WITHOUT THE EXPRESS WRITTEN CONSENT OF GIBRALTAR DESIGN. THE OWNER MAY RETAIN COPIES FOR INFORMATION AND REFERENCE IN CONNECTION ONLY WITH THIS PROJECT.

REVISIONS

MARK	DATE	ISSUED FOR
AD.01	07/07/26	ADDENDUM NO. 01

DRAWING
VARSITY BASEBALL TURF LAYOUT PLAN

PROJECT
HOBART HS BASEBALL & SOFTBALL FIELD REPLACEMENT AND RELATED WORK

© GIBRALTAR DESIGN

SHEET
C-202

Tuesday, 7/7/2026 – 7:44 AM – LAST SAVED BY:CDAVIS
Y:\26-122 SC HOBART – HOBART HS BB AND SB FIELD REPLACEMENT\26-122 CAD\03 SITE\C-202.DWG

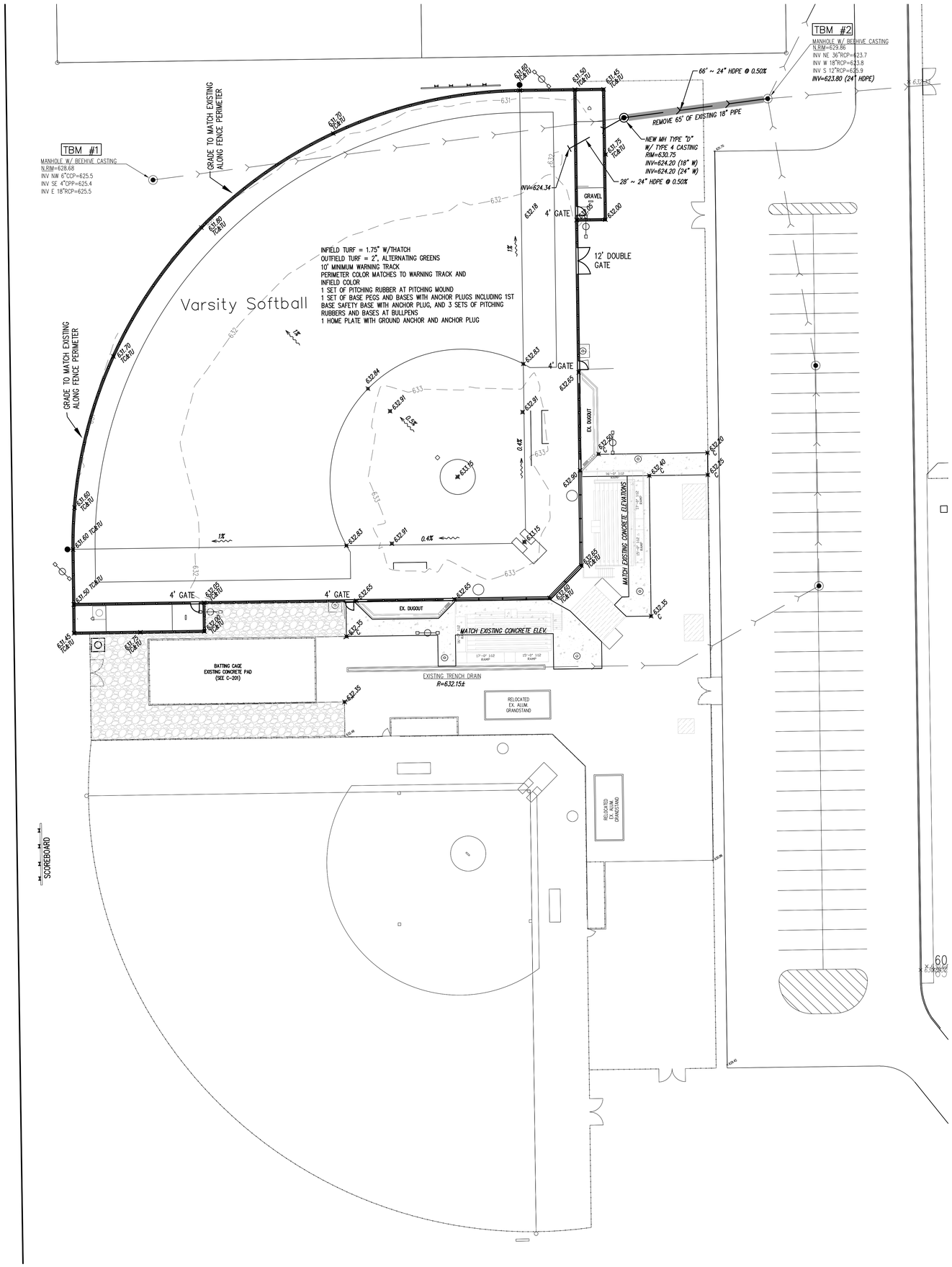

AD-1

GENERAL PLAN NOTES:

1. THE CONTRACTOR IS RESPONSIBLE TO VERIFY ALL EXISTING SITE CONDITIONS AND SHALL NOTIFY THE ARCHITECT/ENGINEER IMMEDIATELY OF ANY DISCREPANCIES BETWEEN THE EXISTING CONDITIONS AND ALL PROPOSED IMPROVEMENTS IN THE CONSTRUCTION DRAWINGS.

2. THE LOCATION OF THE IRRIGATION SPRINKLER SYSTEM AND SUB SURFACE (UNDERDRAIN) SEWER SYSTEM IS DEPICTED AS SHOWN ON THE 01/26/2006 DRAWING SET FOR THE HOBART HIGH SCHOOL PREPARED BY GIBRALTAR DESIGN. THE LOCATIONS SHOWN WERE PROPOSED AND ARE NOT AS-BUILT. THE LOCATIONS ARE APPROXIMATE AND SHOULD BE FIELD VERIFIED BY THE CONTRACTOR.

3. TEMPORARY BENCH MARKS FOR CONSTRUCTION ARE:

1) TBM #1, THE NORTH RIM OF THE EXISTING MANHOLE WITH BEEHIVE CASTING LOCATED NORTHWEST OF THE VARSITY SOFTBALL FIELD. ELEVATION = 628.68
2) TBM #2, THE NORTH RIM OF THE EXISTING MANHOLE WITH BEEHIVE CASTING LOCATED NORTHEAST OF THE VARSITY SOFTBALL FIELD. ELEVATION = 629.86
3) TBM #3, THE NORTH RIM OF THE EXISTING BEEHIVE CATCH BASIN LOCATED NORTHWEST OF THE VARSITY BASEBALL FIELD. ELEVATION = 629.70
4) TBM #4, THE NORTH RIM OF THE EXISTING BEEHIVE CATCH BASIN LOCATED NORTHEAST OF THE VARSITY BASEBALL FIELD. ELEVATION = 629.57

LEGEND
PROPOSED

C	CONCRETE
CB	CATCH BASIN
MH	MANHOLE
OG	OPEN GRATE
TC	TOP OF CURB
TU	TOP OF ARTIFICIAL TURF
★000.00	GRADE
〰	DRAINAGE FLOW
◉	NEW MANHOLE / NEW CATCH BASIN
	NEW STORM SEWER

LEGEND
EXISTING

◉	MANHOLE
Ⓢ	SANITARY MANHOLE
	CATCH BASIN/INLET
	FOUL BALL POLE
Ø	POWER POLE
	LIGHT POLE
	WATER VALVE
	FIRE HYDRANT
G	GAS VALVE
1"	PVC PIPING W/ SIZE (APPROX.)
	SPRINKLER HEADS
	CONTROL VALVE
	GATE VALVE
	WINTER BLOWOUT CONNECTION
	BACKFLOW PREVENTER
GAS GAS	GAS LINE
E E	ELECTRIC LINE
	CHAIN LINK FENCE
	UNDERDRAIN PIPE SYSTEM
	EXISTING SANITARY SEWER
	EXISTING STORM SEWER
	EXISITNG WATER MAIN
000	CONTOUR
633.16 +	EXISTING SPOT ELEVATION

NORTH
GRAPHIC SCALE
20 0 10 20 40 80
(IN FEET)
1 inch = 20 ft.

GIBRALTAR
DESIGN
ARCHITECTURE • ENGINEERING • INTERIOR DESIGN

PROJECT
HOBART HS BASEBALL AND SOFTBALL FIELD REPLACEMENT AND RELATED WORK

FOR:
SCHOOL CITY OF HOBART
32 E. 7TH STREET, HOBART, IN 46342

100% CONSTRUCTION DRAWINGS
06/29/2026

GIBRALTAR DESIGN
4030 Vincennes Rd, Suite 100,
Indianapolis, IN 46268
Homepage www.GibraltarDesign.com
Email: info@GibraltarDesign.com
Phone: (317) 580-5777

PROJECT
26-122
DATE
06/29/26
COORDINATED BY
DCT
DRAWN BY
DCT EM
CHECKED BY
DCT

DONALD C. TORRENCA
REGISTERED
No. 19862
STATE OF INDIANA
PROFESSIONAL ENGINEER

COPYRIGHT NOTICE:
THE CONCEPTS, DESIGNS, PLANS, DETAILS, ETC., SHOWN ON THIS DOCUMENT ARE THE PROPERTY OF GIBRALTAR DESIGN AND WERE CREATED FOR USE ON THIS SPECIFIC PROJECT. NONE OF THIS INFORMATION SHALL BE USED BY ANY PERSON OR FIRM FOR ANY PURPOSE WITHOUT THE EXPRESS WRITTEN CONSENT OF GIBRALTAR DESIGN. THE OWNER MAY RETAIN COPIES FOR INFORMATION AND REFERENCE IN CONNECTION ONLY WITH THIS PROJECT.

REVISIONS

MARK	DATE	ISSUED FOR
AD-1	07/07/26	ADDENDUM NO. 1

DRAWING
VARSITY SOFTBALL TURF GRADING PLAN

PROJECT
HOBART HS BASEBALL & SOFTBALL FIELD REPLACEMENT AND RELATED WORK

© GIBRALTAR DESIGN

SHEET
C-301

Z:\2026-5017 Hobart High School BB & SB Fields\dwg\2026-5017.dwg 7/6/2026 12:04:32 PM CDT

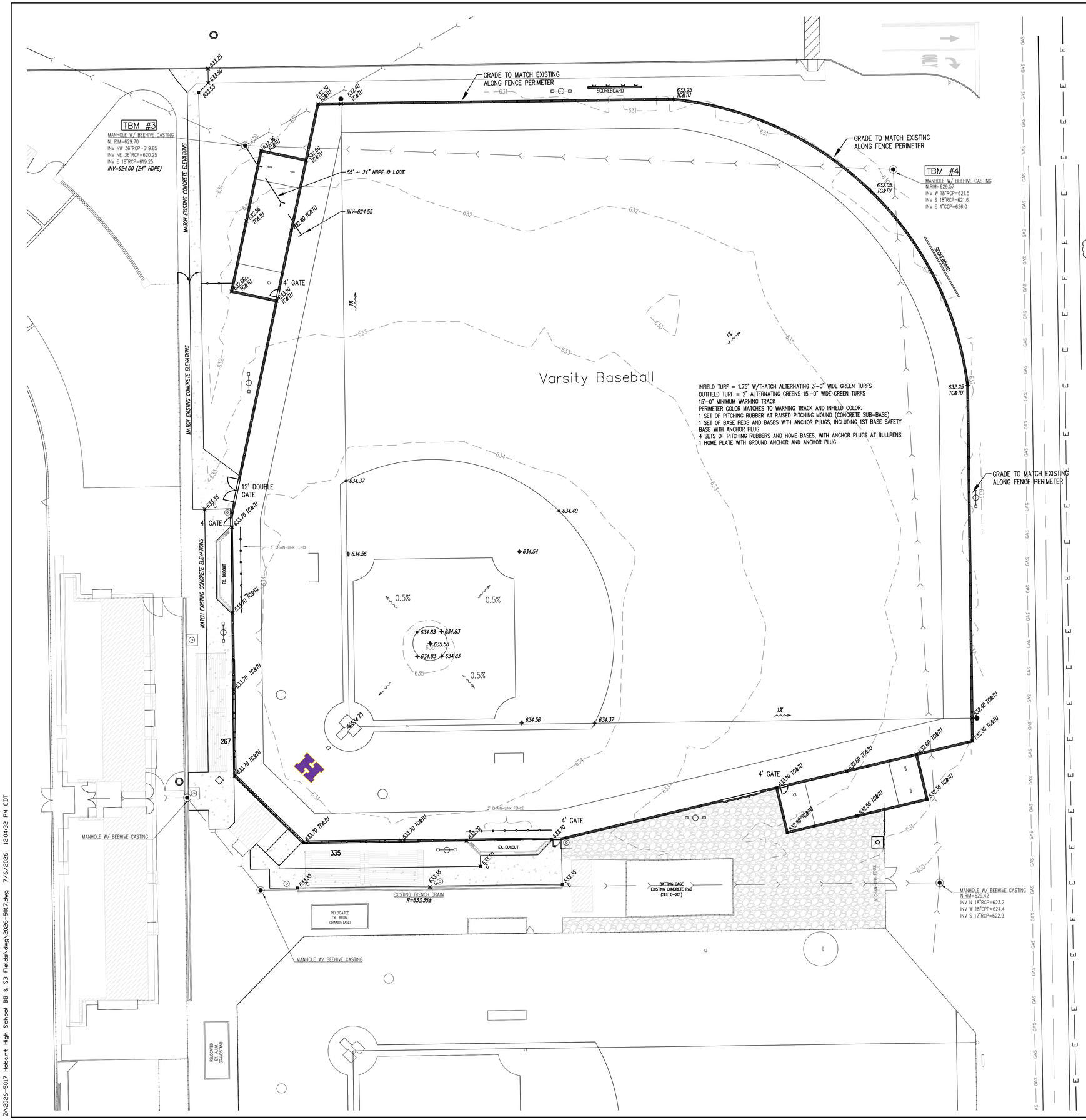

AD-1

GENERAL PLAN NOTES:

1. THE CONTRACTOR IS RESPONSIBLE TO VERIFY ALL EXISTING SITE CONDITIONS AND SHALL NOTIFY THE ARCHITECT/ENGINEER IMMEDIATELY OF ANY DISCREPANCIES BETWEEN THE EXISTING CONDITIONS AND ALL PROPOSED IMPROVEMENTS IN THE CONSTRUCTION DRAWINGS.

2. THE LOCATION OF THE IRRIGATION SPRINKLER SYSTEM AND SUB SURFACE (UNDERDRAIN) SEWER SYSTEM IS DEPICTED AS SHOWN ON THE 01/26/2006 DRAWING SET FOR THE HOBART HIGH SCHOOL PREPARED BY GIBRALTAR DESIGN. THE LOCATIONS SHOWN WERE PROPOSED AND ARE NOT AS-BUILT. THE LOCATIONS ARE APPROXIMATE AND SHOULD BE FIELD VERIFIED BY THE CONTRACTOR.

3. TEMPORARY BENCH MARKS FOR CONSTRUCTION ARE:

1) TBM #1, THE NORTH RIM OF THE EXISTING BEEHIVE CATCH BASIN LOCATED NORTHWEST OF THE VARSITY SOFTBALL FIELD.
ELEVATION = 628.68
2) TBM #2, THE NORTH RIM OF THE EXISTING BEEHIVE CATCH BASIN LOCATED NORTHEAST OF THE VARSITY SOFTBALL FIELD.
ELEVATION = 629.86
3) TBM #3, THE NORTH RIM OF THE EXISTING BEEHIVE CATCH BASIN LOCATED NORTHWEST OF THE VARSITY BASEBALL FIELD.
ELEVATION = 629.70
4) TBM #4, THE NORTH RIM OF THE EXISTING BEEHIVE CATCH BASIN LOCATED NORTHEAST OF THE VARSITY BASEBALL FIELD.
ELEVATION = 629.57

LEGEND
PROPOSED

C	CONCRETE
CB	CATCH BASIN
MH	MANHOLE
OG	OPEN GRATE
TC	TOP OF CURB
TU	TOP OF ARTIFICIAL TURF
920.00	GRADE
	DRAINAGE FLOW
	NEW MANHOLE / NEW CATCH BASIN
	NEW STORM SEWER

LEGEND
EXISTING

	MANHOLE
	SANITARY MANHOLE
	CATCH BASIN/INLET
	FOUL BALL POLE
	POWER POLE
	LIGHT POLE
	WATER VALVE
	FIRE HYDRANT
G	GAS VALVE
	PVC PIPING W/ SIZE (APPROX.)
	SPRINKLER HEADS
	CONTROL VALVE
	GATE VALVE
	WINTER BLOWOUT CONNECTION
	BACKFLOW PREVENTER
GAS	GAS LINE
E	ELECTRIC LINE
	CHAIN LINK FENCE
	UNDERDRAIN PIPE SYSTEM
	EXISTING SANITARY SEWER
	EXISTING STORM SEWER
	EXISITNG WATER MAIN
000	CONTOUR
633.16 +	EXISTING SPOT ELEVATION

NORTH
GRAPHIC SCALE
20 0 10 20 40 80
(IN FEET)
1 inch = 20 ft.

GIBRALTAR DESIGN
ARCHITECTURE • ENGINEERING • INTERIOR DESIGN

PROJECT
HOBART HS BASEBALL AND SOFTBALL FIELD REPLACEMENT AND RELATED WORK

FOR:
SCHOOL CITY OF HOBART
32 E. 7TH STREET, HOBART, IN 46342

100% CONSTRUCTION DRAWINGS
06/29/2026

GIBRALTAR DESIGN
4030 Vincennes Rd, Suite 100,
Indianapolis, IN 46268
Homepage www.GibraltarDesign.com
Email: info@GibraltarDesign.com
Phone: (317) 580-5777

PROJECT 26-122
DATE 06/29/26
COORDINATED BY DCT
DRAWN BY DCT EM
CHECKED BY DCT

DONALD C. TORRENCA REGISTERED No. 19868 STATE OF INDIANA PROFESSIONAL ENGINEER

COPYRIGHT NOTICE:
THE CONCEPTS, DESIGNS, PLANS, DETAILS, ETC. SHOWN ON THIS DOCUMENT ARE THE PROPERTY OF GIBRALTAR DESIGN AND WERE CREATED FOR USE ON THIS SPECIFIC PROJECT. NONE OF THIS INFORMATION SHALL BE USED BY ANY PERSON OR FIRM FOR ANY PURPOSE WITHOUT THE EXPRESS WRITTEN CONSENT OF GIBRALTAR DESIGN. THE OWNER MAY RETAIN COPIES FOR INFORMATION AND REFERENCE IN CONNECTION ONLY WITH THIS PROJECT.

REVISIONS

MARK	DATE	ISSUED FOR
AD-1	07/07/26	ADDENDUM NO. 1

DRAWING
VARSITY BASEBALL GRADING PLAN

PROJECT
HOBART HS BASEBALL & SOFTBALL FIELD REPLACEMENT AND RELATED WORK

© GIBRALTAR DESIGN

SHEET
C-302

Z:\2026-5017 Hobart High School BB & SB Fields\dwg\2026-5017.dwg 7/6/2026 12:04:32 PM CDT

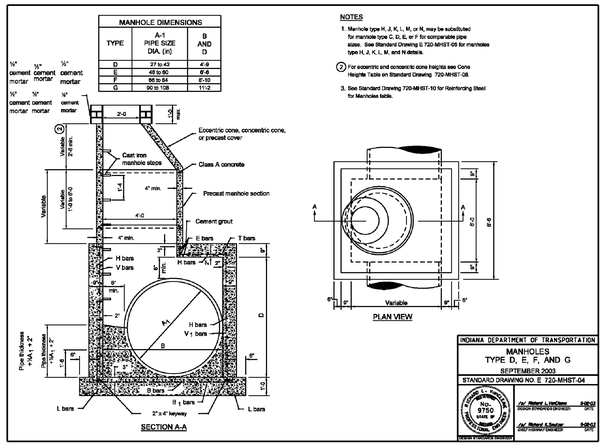

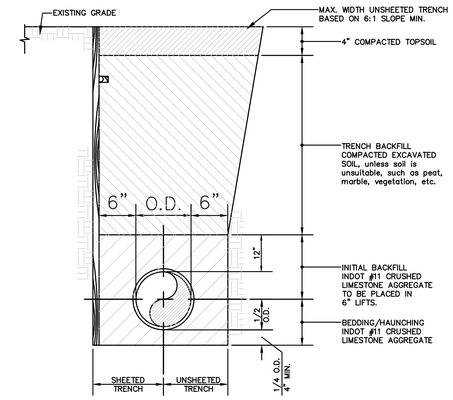

PIPE BEDDING DETAIL
FOR TRENCH IN GRASS AREAS

NOTE:
NO SLAG SHALL BE PERMITTED AS PIPE BEDDING MATERIAL

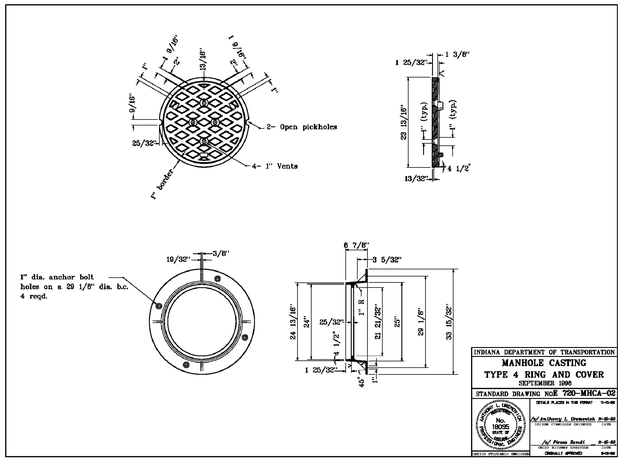

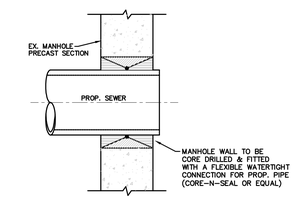

PIPE CONNECTION DETAIL
TO EXISTING MANHOLE
NOT TO SCALE

AD-1

GIBRALTAR
DESIGN
ARCHITECTURE • ENGINEERING • INTERIOR DESIGN

PROJECT
HOBART HS BASEBALL AND SOFTBALL FIELD REPLACEMENT AND RELATED WORK

FOR:
SCHOOL CITY OF HOBART
32 E. 7TH STREET, HOBART, IN 46342

100% CONSTRUCTION DRAWING
06/29/2026

GIBRALTAR DESIGN
9102 N. Meridian St., Ste. 300
Indianapolis, IN 46260
Homepage www.GibraltarDesign.com
Email info@GibraltarDesign.com
Phone 317.580.5777 Fax 317.580.5778

PROJECT
26-122
DATE
06/29/26
COORDINATED BY
DCT
DRAWN BY
DCT EM
CHECKED BY
DCT

DONALD C. TORRENCE REGISTERED No. 19868 STATE OF INDIANA PROFESSIONAL ENGINEER

COPYRIGHT NOTICE:
THE CONCEPTS, DESIGNS, PLANS, DETAILS, ETC., SHOWN ON THIS DOCUMENT ARE THE PROPERTY OF GIBRALTAR DESIGN AND WERE CREATED FOR USE ON THIS SPECIFIC PROJECT. NONE OF THIS INFORMATION SHALL BE USED BY ANY PERSON OR FIRM FOR ANY OTHER PURPOSE WITHOUT WRITTEN CONSENT OF GIBRALTAR DESIGN. THE OWNER MAY RETAIN COPIES FOR INFORMATION AND REFERENCE IN CONNECTION ONLY WITH THIS PROJECT.

REVISIONS

MARK	DATE	ISSUED FOR
AD-1	07/07/26	ADDENDUM NO. 1

DRAWING
DETAILS AND SPECIFICATIONS

PROJECT
HOBART HS BASEBALL & SOFTBALL FIELD REPLACEMENT AND RELATED WORK

GIBRALTAR DESIGN

SHEET
C-400

Z:\2026-5017 Hobart High School BB & SB Fields\dwg\2026-5017 Details.dwg 7/6/2026 12:02:17 PM CDT

AD.01

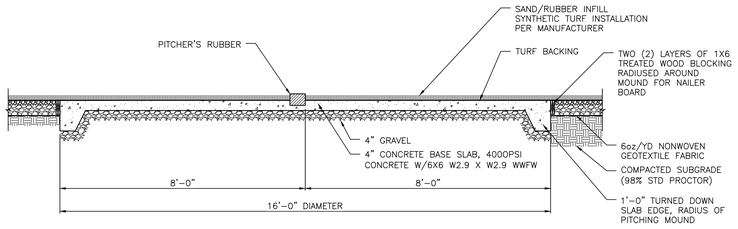

SOFTBALL PITCHER'S CIRCLE
SCALE: 1/2" = 1'-0"
13 / C-402

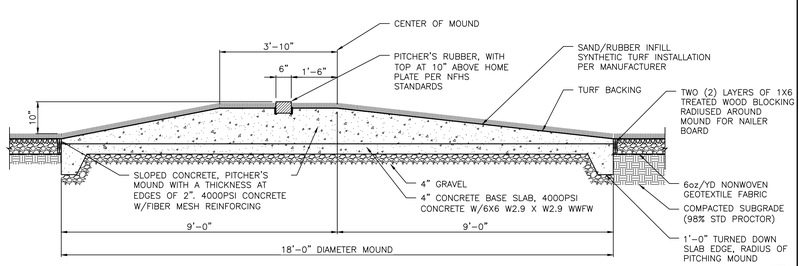

BASEBALL RAISED PITCHING MOUND
SCALE: 1/2" = 1'-0"
12 / C-402

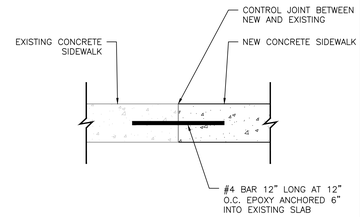

CONCRETE SIDEWALK NEW TO EXISTING JOINT
SCALE: 1 1/2" = 1'-0"
10 / C-402

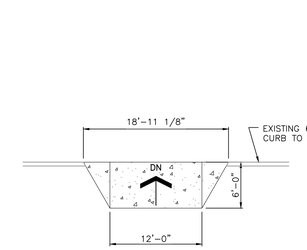

VEHICLE ACCESS RAMP - ALTERNATE
SCALE: 1/8" = 1'-0"
9 / C-402

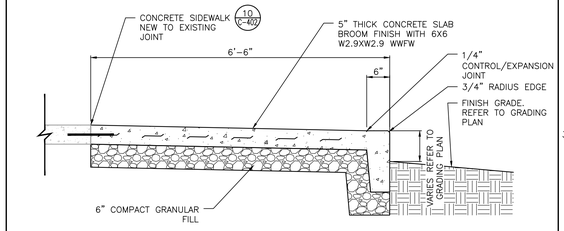

TYPICAL TURNED-DOWN PERIMETER SIDEWALK
SCALE: 3/4" = 1'-0"
8 / C-402

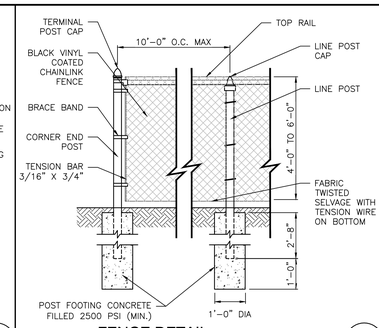

FENCE DETAIL
SCALE: 1/2" = 1'-0"
4 / C-402

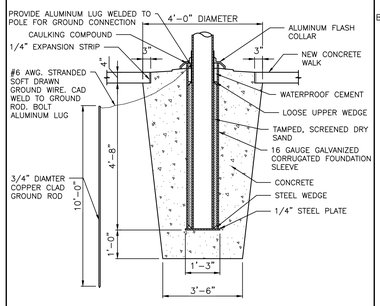

FLAGPOLE FOUNDATION
SCALE: NTS
7 / C-402

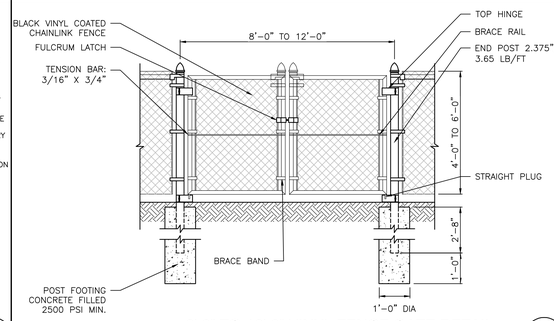

8'-0" TO 12'-0" VINYL FENCE GATE DETAIL
SCALE: 1/2" = 1'-0"
3 / C-402

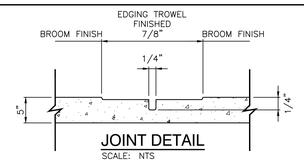

JOINT DETAIL
SCALE: NTS

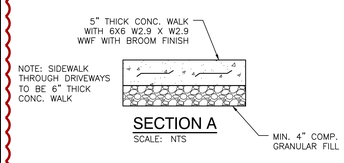

SECTION A
SCALE: NTS

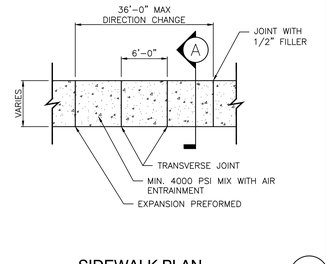

SIDEWALK PLAN
SCALE: 1/8" = 1'-0"
6 / C-402

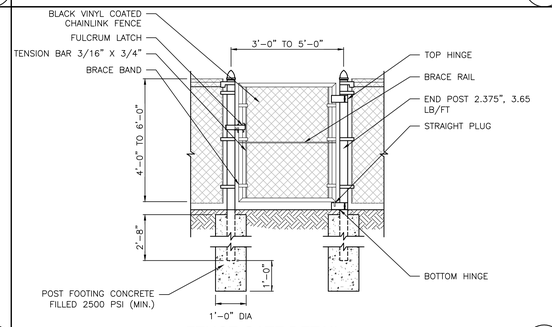

FENCE GATE DETAIL
SCALE: 1/2" = 1'-0"
2 / C-402

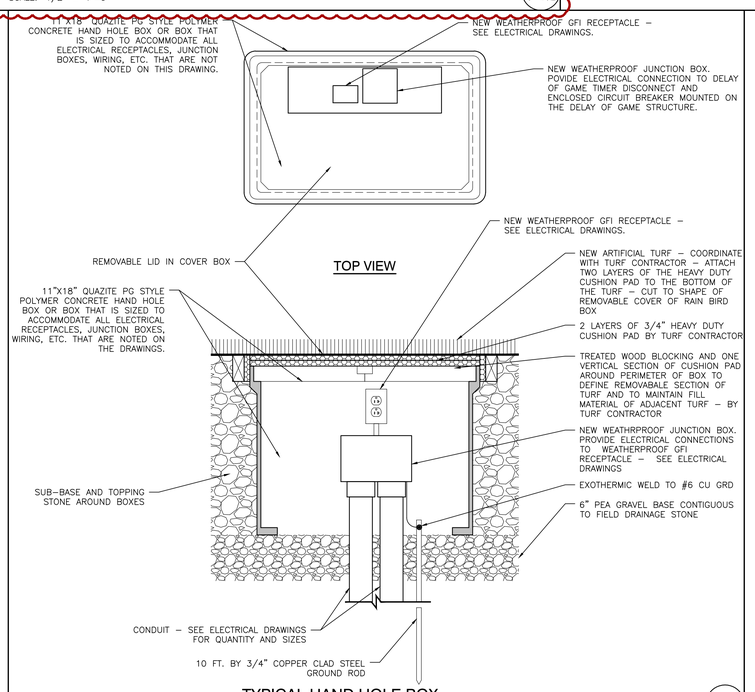

TYPICAL HAND HOLE BOX
SCALE: 1 1/2" = 1'-0"
11 / C-402

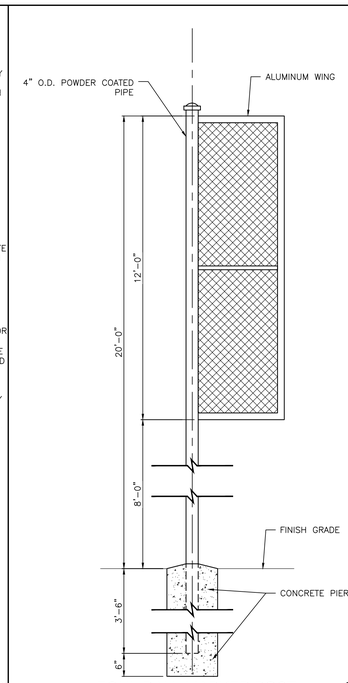

FOUL BALL MARKER POST
SCALE: NOT TO SCALE
5 / C-402

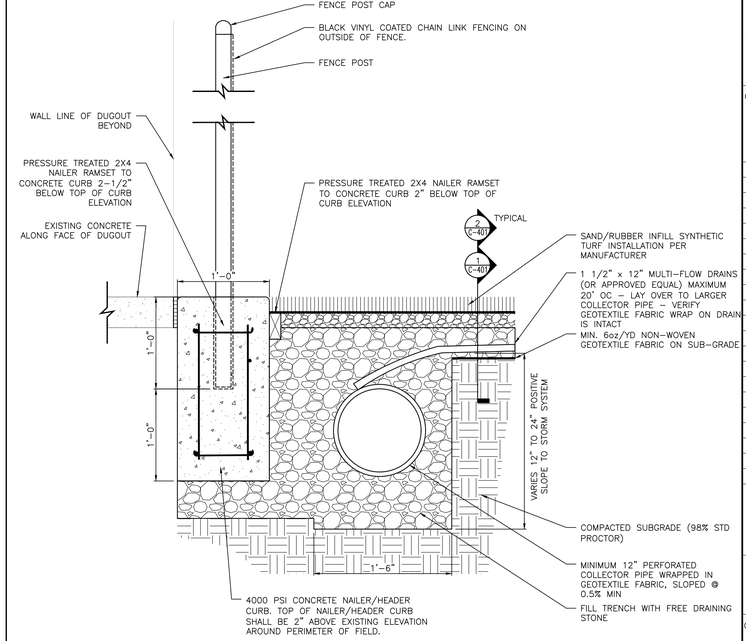

FENCE POST DETAIL - TYPICAL
SCALE: 1 1/2" = 1'-0"
1 / C-402

GIBRALTAR
DESIGN
ARCHITECTURE • ENGINEERING • INTERIOR DESIGN

PROJECT
HOBART HS BASEBALL AND SOFTBALL FIELD REPLACEMENT AND RELATED WORK

FOR:
SCHOOL CITY OF HOBART
32 E. 7TH STREET, HOBART, IN 46342

100% CONSTRUCTION DRAWINGS
06/29/2026

GIBRALTAR DESIGN
4030 Vincennes Rd, Suite 100,
Indianapolis, IN 46268
Homepage www.GibraltarDesign.com
Email: info@GibraltarDesign.com
Phone: (317) 580-5777

PROJECT
26-122
DATE
06/29/26
COORDINATED BY
JPB
DRAWN BY
CND
CHECKED BY
JPB

JOSEPH P. BRIGGS
REGISTERED
NO. 11600109
STATE OF INDIANA
ARCHITECT

COPYRIGHT NOTICE:
THE CONCEPTS, DESIGNS, PLANS, DETAILS, ETC. SHOWN ON THIS DOCUMENT ARE THE PROPERTY OF GIBRALTAR DESIGN AND WERE CREATED FOR USE ON THIS SPECIFIC PROJECT. NONE OF THIS INFORMATION SHALL BE USED BY ANY PERSON OR FIRM FOR ANY PURPOSE WITHOUT THE EXPRESS WRITTEN CONSENT OF GIBRALTAR DESIGN. THE OWNER MAY RETAIN COPIES FOR INFORMATION AND REFERENCE IN CONNECTION ONLY WITH THIS PROJECT.

REVISIONS

MARK	DATE	ISSUED FOR
AD.01	07/07/26	ADDENDUM NO. 01

DRAWING
ARTIFICIAL TURF AND ATHLETIC EQUIPMENT DETAILS

PROJECT
HOBART HS BASEBALL & SOFTBALL FIELD REPLACEMENT AND RELATED WORK

© GIBRALTAR DESIGN

SHEET
C-402

Tuesday, 7/7/2026 – 7:46 AM – LAST SAVED BY:CDAVIS
Y:\26-122 SC HOBART – HOBART HS BB AND SB FIELD REPLACEMENT\26-122 CAD\03 SITE\C-402.DWG

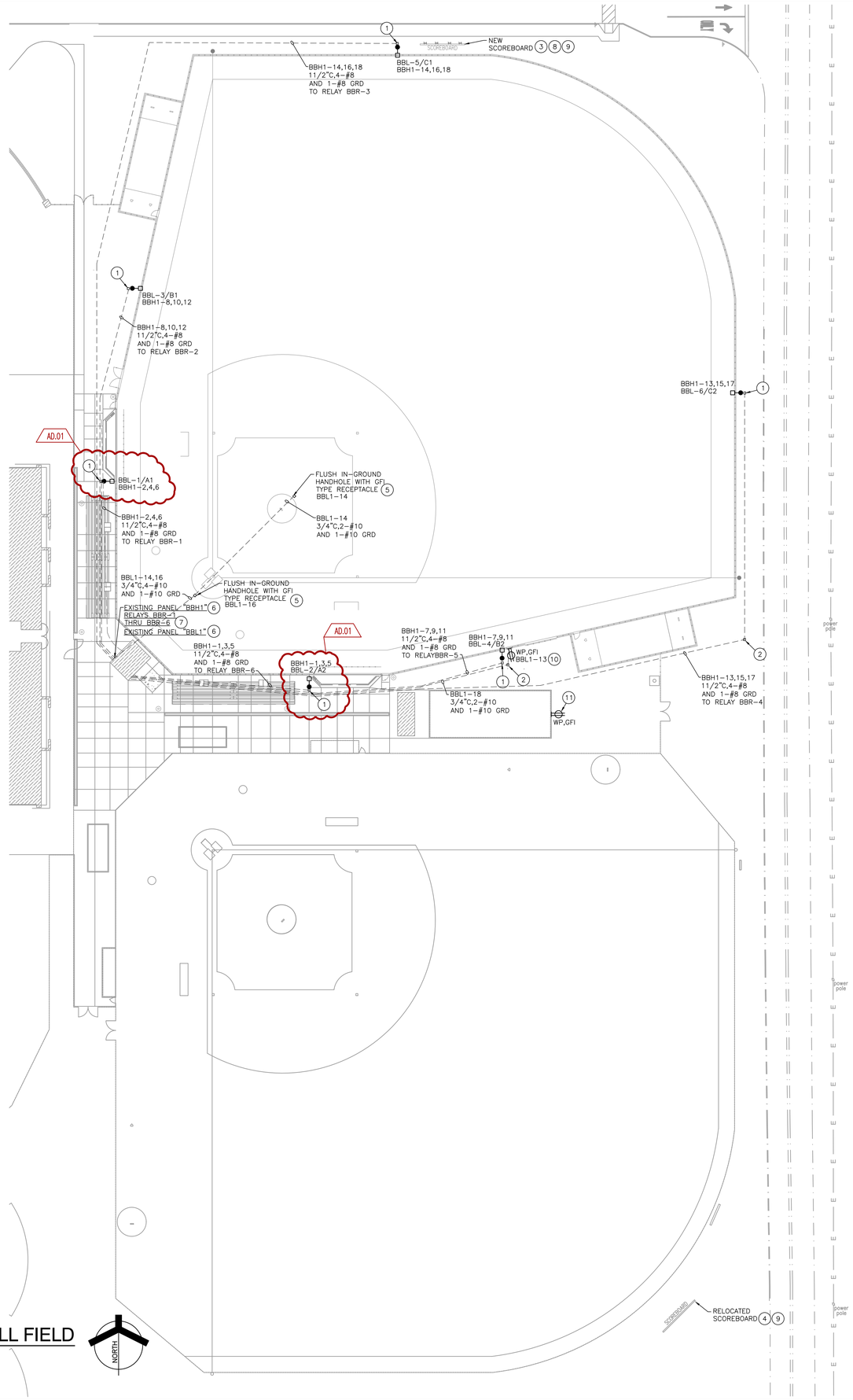

ENLARGED ELECTRICAL SITE PLAN OF BASEBALL FIELD

SCALE: 1" = 30'-0"

SITE PLAN NOTES - GENERAL

1. ALL WORK SHOWN ON THIS SHEET IS NEW AND BY THE ELECTRICAL TRADES, UNLESS OTHERWISE INDICATED.
2. COORDINATE LOCATIONS OF UNDERGROUND CONDUITS, HANDHOLES AND MANHOLES WITH OTHER SITE UTILITIES, UNDERGROUND DRAINS, SERVICES, STRUCTURES AND FINAL GRADING.
3. NOT ALL UTILITIES HAVE BEEN SHOWN. VERIFY LOCATIONS AND ROUTING OF ALL NEW AND EXISTING UTILITIES PRIOR TO ANY NEW WORK.
4. FOR ADDITIONAL GENERAL ELECTRICAL NOTES, SEE GENERAL ELECTRICAL PROJECT NOTES ON SHEET E-001.
5. SEE E-600 SHEETS FOR ELECTRICAL DETAILS AND SCHEDULES.
6. COORDINATE EXACT SPORT LIGHTING POLE LOCATIONS WITH SPORTS LIGHTING CONTRACTOR, CONSTRUCTION MANAGER AND ALL UNDERGROUND UTILITIES PRIOR TO ROUGHING-IN. SEE CIVIL DRAWINGS.
7. FIELD COORDINATE AND VERIFY ROUTING OF ALL NEW UNDERGROUND CONDUITS AND WIRING WITH ARCHITECT, CONSTRUCTION MANAGER AND ALL UNDERGROUND UTILITIES PRIOR TO BIDDING AND ROUGHING-IN.

ELECTRICAL SITE PLAN NOTES:

(THESE NOTES APPLY TO THIS SHEET ONLY)

(1) NEW FLUSH IN-GROUND WEATHERPROOF JUNCTION BOX.

(2) NEW FLUSH IN-GROUND WEATHERPROOF PULL BOX.

(3) NEW VARSITY BASEBALL FIELD SCOREBOARD. RELOCATE EXISTING ELECTRICAL COMBINATION TRANSFORMER, DISCONNECT AND RECEPTACLE, JUNCTION BOXES, CONDUIT AND WIRE AND EXISTING CIRCUIT AND CONNECT TO THE NEW VARSITY BASEBALL FIELD SCOREBOARD. REMOVE ANY CONDUIT AND WIRE NOT REUSED TO SERVE THE NEW VARSITY BASEBALL FIELD SCOREBOARD. INSPECT THE EXISTING VARSITY SCOREBOARD ELECTRICAL TRANSFORMER, DISCONNECT AND RECEPTACLE BEING RELOCATED AND PROVIDE ALL LABOR AND MATERIAL TO BRING THE EQUIPMENT UP TO FIRST CLASS OPERATIONAL SYSTEM. CONTRACTOR SHALL VERIFY THE EXACT LOCATION AND ELECTRICAL REQUIREMENTS WITH THE ARCHITECT, CONSTRUCTION MANAGER AND SCOREBOARD INSTALLER/SUPPLIER PRIOR TO ROUGHING-IN AND MAKE ANY NECESSARY AND APPROPRIATE MODIFICATIONS TO THE ELECTRICAL SERVICE THAT WILL SERVE THE NEW SCOREBOARD TO PROVIDE A COMPLETE AND OPERATIONAL SYSTEM.
(ALTERNATE BID)

(4) RELOCATED VARSITY BASEBALL FIELD SCOREBOARD. CONNECT RELOCATED VARSITY BASEBALL FIELD SCOREBOARD TO EXISTING JUNIOR VARSITY BASEBALL FIELD SCOREBOARD ELECTRICAL COMBINATION TRANSFORMER, DISCONNECT AND RECEPTACLE, JUNCTION BOX, CONDUIT AND WIRE AND EXISTING CIRCUIT. REMOVE ANY CONDUIT AND WIRE NOT REUSED TO SERVE THE RELOCATED VARSITY BASEBALL FIELD SCOREBOARD. INSPECT THE EXISTING JUNIOR VARSITY BASEBALL FIELD SCOREBOARD ELECTRICAL TRANSFORMER, DISCONNECT AND RECEPTACLE AND PROVIDE ALL LABOR AND MATERIAL TO BRING THE EQUIPMENT UP TO FIRST CLASS OPERATIONAL SYSTEM. CONTRACTOR SHALL VERIFY THE EXACT LOCATION AND ELECTRICAL REQUIREMENTS WITH THE ARCHITECT, CONSTRUCTION MANAGER AND SCOREBOARD INSTALLER/SUPPLIER PRIOR TO ROUGHING-IN AND MAKE ANY NECESSARY AND APPROPRIATE MODIFICATIONS TO THE ELECTRICAL SERVICE THAT WILL SERVE THE NEW SCOREBOARD TO PROVIDE A COMPLETE AND OPERATIONAL SYSTEM.
(ALTERNATE BID)

(5) FLUSH IN-GROUND HAND HOLE WITH ONE(1) 20 AMPERE RATED GFI TYPE DUPLEX WITH "WEATHERPROOF-IN-USE" COVER. SEE DETAIL ON SHEET E-601 AND THE ARCHITECTURAL DRAWINGS. VERIFY EXACT LOCATION WITH THE ARCHITECT AND CONSTRUCTION MANAGER PRIOR TO ROUGHING-IN. SEE HAND HOLE DETAIL "A".

(6) MODIFY EXISTING PANEL AS SHOWN ON THE PANEL SCHEDULES ON SHEET E-602.

(7) BASEBALL FIELD LIGHTING RELAY CABINET BBLRC-1 FOR LIGHTING RELAY BBR-1 THROUGH BBR-6.

(8) PROVIDE ALL LABOR AND MATERIAL TO INSTALL THE EXISTING WEATHER ALERT SIREN ON THE NEW SCOREBOARD STRUCTURE AND CONNECT TO THE EXISTING WEATHER ALERT SYSTEM TO PROVIDE A COMPLETE AND OPERATIONAL SYSTEM. (ALTERNATE BID).

(9) ALTERNATE BID

(10) NEW PEDOC (1P18HT SERIES)18" HIGH PEDESTAL WITH BASE, HINGED TOP (WEATHERPROOF-IN-USE) AND WEATHERPROOF 20 AMP GFI TYPE RECEPTACLE CONNECTED TO THE CIRCUIT INDICATED. VERIFY EXACT LOCATION WITH OWNER, ARCHITECT AND CONSTRUCTION MANAGER PRIOR TO ROUGHING-IN.

(11) INSPECT THE EXISTING BATTING CAGE ELECTRICAL TRANSFORMER, DISCONNECT AND RECEPTACLE AND PROVIDE ALL LABOR AND MATERIAL TO BRING THE EQUIPMENT UP TO FIRST CLASS OPERATIONAL SYSTEM.

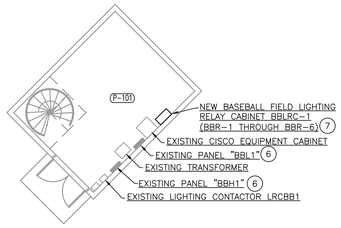

FIRST FLOOR ELECTRICAL PLAN OF BASEBALL FIELD PRESSBOX/STORAGE BUILDING

SCALE: 1/8" = 1'-0"

NORTH

GIBRALTAR
DESIGN
ARCHITECTURE • ENGINEERING • INTERIOR DESIGN

PROJECT
HOBART HS BASEBALL AND SOFTBALL FIELD REPLACEMENT AND RELATED WORK

FOR:
SCHOOL CITY OF HOBART
32 E. 7TH STREET, HOBART, IN 46342

100% CONSTRUCTION DRAWINGS
06/29/2026

GIBRALTAR DESIGN
4030 Vincennes Rd, Suite 100,
Indianapolis, IN 46268
Homepage www.GibraltarDesign.com
Email: info@GibraltarDesign.com
Phone: (317) 580-5777

PROJECT
26-122
DATE
06/29/26
COORDINATED BY
PCB
DRAWN BY
PCB JVC
CHECKED BY
DJ

DAVID G. JANNEY
REGISTERED
NO. 10302590
STATE OF INDIANA
PROFESSIONAL ENGINEER

COPYRIGHT NOTICE:
THE CONCEPTS, DESIGNS, PLANS, DETAILS, ETC., SHOWN ON THIS DOCUMENT ARE THE PROPERTY OF GIBRALTAR DESIGN AND WERE CREATED FOR USE ON THIS SPECIFIC PROJECT. NONE OF THIS INFORMATION SHALL BE USED BY ANY PERSON OR FIRM FOR ANY PURPOSE WITHOUT THE EXPRESS WRITTEN CONSENT OF GIBRALTAR DESIGN. THE OWNER MAY RETAIN COPIES FOR INFORMATION AND REFERENCE IN CONNECTION ONLY WITH THIS PROJECT.

REVISIONS

MARK	DATE	ISSUED FOR
AD.01	07/07/26	ADDENDUM NO. 01

DRAWING
ENLARGED ELECTRICAL SITE PLAN OF BASEBALL FIELD

PROJECT
HOBART HS BASEBALL & SOFTBALL FIELD REPLACEMENT AND RELATED WORK

© GIBRALTAR DESIGN

SHEET
ES102

Monday, 7/6/2026 - 10:51 AM - LAST SAVED BY:PBROWN
Y:\26-122 SC HOBART - HOBART HS BB AND SB FIELD REPLACEMENT\26-122 CAD\09 ELEC\ES102.DWG