GENERAL DEMOLITION ROOF NOTES

#	NOTE
A	ALL PNEUMATIC CONTROLS TO BE REMOVED INCLUDING WIRING, TUBING, THERMOSTATS, SENSORS, ETC. IN PREPARATION FOR COMPLETE CONVERSION TO DDC.
B	ITEMS SHOWN RED ARE DEMO UNLESS NOTED OTHERWISE.
C	ITEMS SHOWN GRAY ARE EXISTING TO REMAIN UNLESS NOTED OTHERWISE.

DEMOLITION ROOF PLAN

#	NOTE
1	DEMO MECHANICAL EQUIPMENT AND CURB IN PREPARATION FOR ROOF PATCH. COORDINATE WITH ROOFING CONTRACTOR FOR PATCH WORK.
2	EXISTING MECHANICAL EQUIPMENT TO REMAIN.
3	DEMO EXISTING MECHANICAL EQUIPMENT AND CURB IN PREPARATION FOR NEW MECHANICAL EQUIPMENT AND NEW CURB.
4	DEMO EXISTING MECHANICAL EQUIPMENT. CAP EXISTING ROOF CURB PER DETAIL 4/M-503.
5	DEMO EXISTING AIR-COOLED CONDENSING UNIT, REFRIGERANT PIPING, AND PIPING CURB BACK INTO BUILDING. COORDINATE WITH ROOFING CONTRACTOR FOR PATCHWORK.
6	EXISTING STAGE VENTILATOR TO REMAIN.
7	EXISTING ACTIVE BOILER FLUE TO REMAIN.

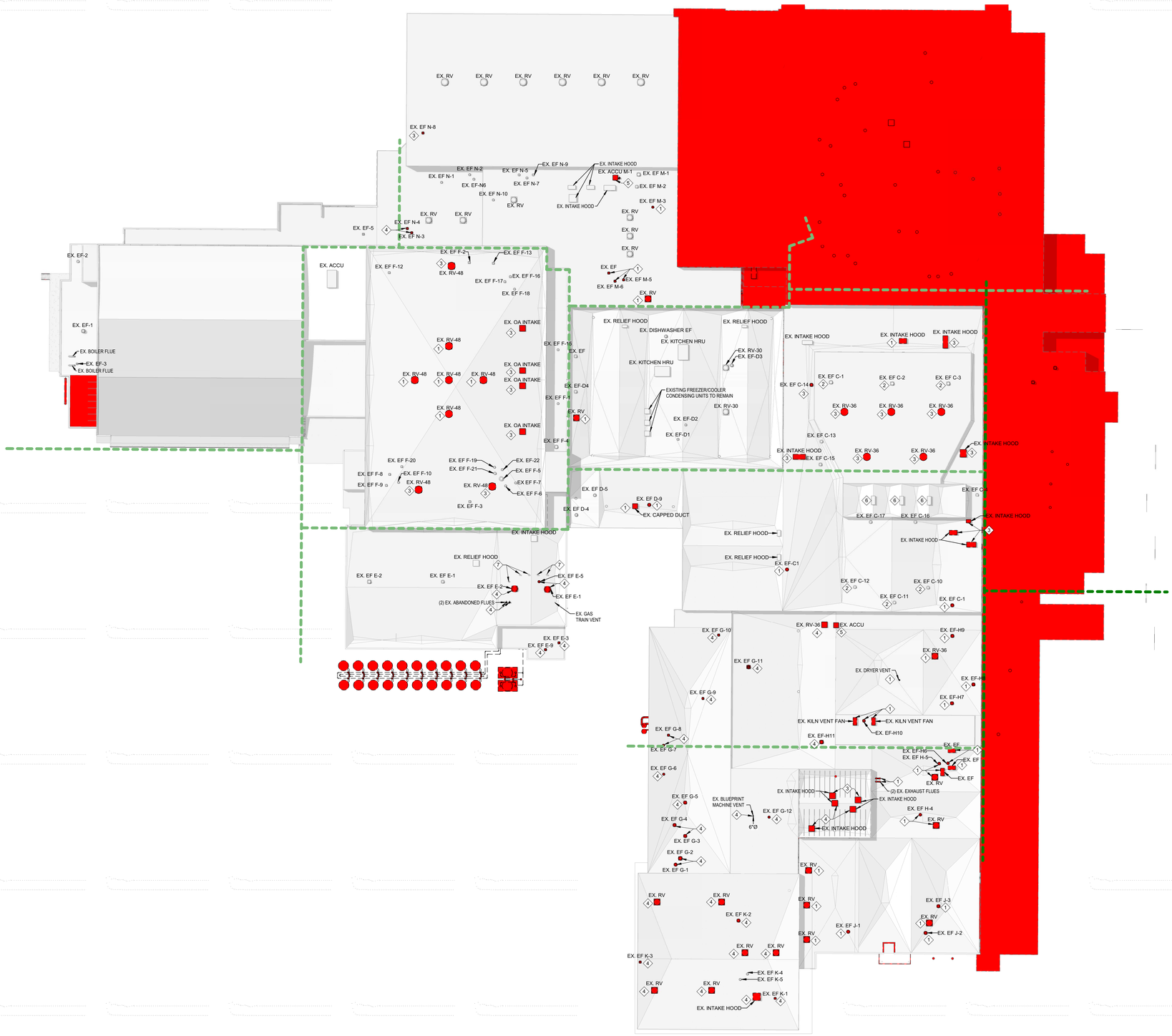

2A MECHANICAL HVAC ROOF DEMO PLAN
1" = 30'-0"

SCHMIDT ASSOCIATES
415 Massachusetts Avenue
Indianapolis, IN 46204
www.schmidt-arch.com

Project No. 2018-050.LNH
Project Date 07.06.2020
Produced BAW AJE

SARAH KATHLEEN HEMPSTEAD REGISTERED No. AR10400134 STATE OF INDIANA ARCHITECT

These Drawings and Specifications, and all copies thereof are and shall remain the property and copyright of the Architect. They shall be used only with respect to this Project and are not to be used on any other Project or Work without prior written permission from the Architect.

#	Revision	Date
A2	ADDENDUM #2	07.23.2020

7802 Hague Road
Indianapolis, IN 46256

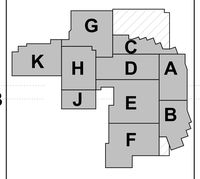

KEY PLAN

MSD OF LAWRENCE TOWNSHIP

ADDITIONS AND RENOVATIONS TO LAWRENCE NORTH HIGH SCHOOL

MECHANICAL ROOF DEMO PLAN

MDR101

GENERAL MECHANICAL ROOF NOTES

#	NOTE
A	MAINTAIN 10' CLEARANCE FROM ROOF EDGE.

MECHANICAL ROOF PLAN NOTES

#	NOTE
1	NEW 14" ROUND BOILER FLUE. SEE DETAIL 5C/M-503.
2	CAP ROOF CURB WITH INSULATED CAP PER DETAIL 4B/M-503. VERIFY DIMENSIONS IN FIELD. SEAL WATERTIGHT. COORDINATE WITH EXISTING ROOFING WARRANTY.
3	EXISTING ACTIVE BOILER FLUE TO REMAIN.
4	NEW RELIEF HOOD IN NEW ROOF PENETRATION.
5	DRYER VENT. CONTINUATION ON MHF1. SEE DETAIL 5B/M-503.
6	SPLIT SYSTEM CONDENSING UNIT. SIZE REFRIGERANT PIPING PER MANUFACTURER'S RECOMMENDATION BASED ON TOTAL EQUIVALENT LENGTH. SUPPORT CONDENSING UNIT WITH SUPPORT SYSTEM LIKE MIRO PER DETAILS 3F AND 4A/M-503.
7	MUSHROOM TOP STYLE GRAVITY INTAKE SERVING FAN COIL UNIT VENTILATION AIR TO BE MOUNTED ON ROOF. INSTALLATION TO BE SIMILAR TO DUCTED/POWERED RELIEF DETAIL 1C/M-503. SEE GRAVITY VENTILATOR SCHEDULE ON M-604.
8	MUSHROOM TOP STYLE GRAVITY RELIEF SERVING KILN. SEE DETAIL 4D/M-502. SEE GRAVITY VENTILATOR SCHEDULE ON M-604.
9	NEW INTAKE/RELIEF HOOD UTILIZING EXISTING ROOF PENETRATION. NEW CURB.

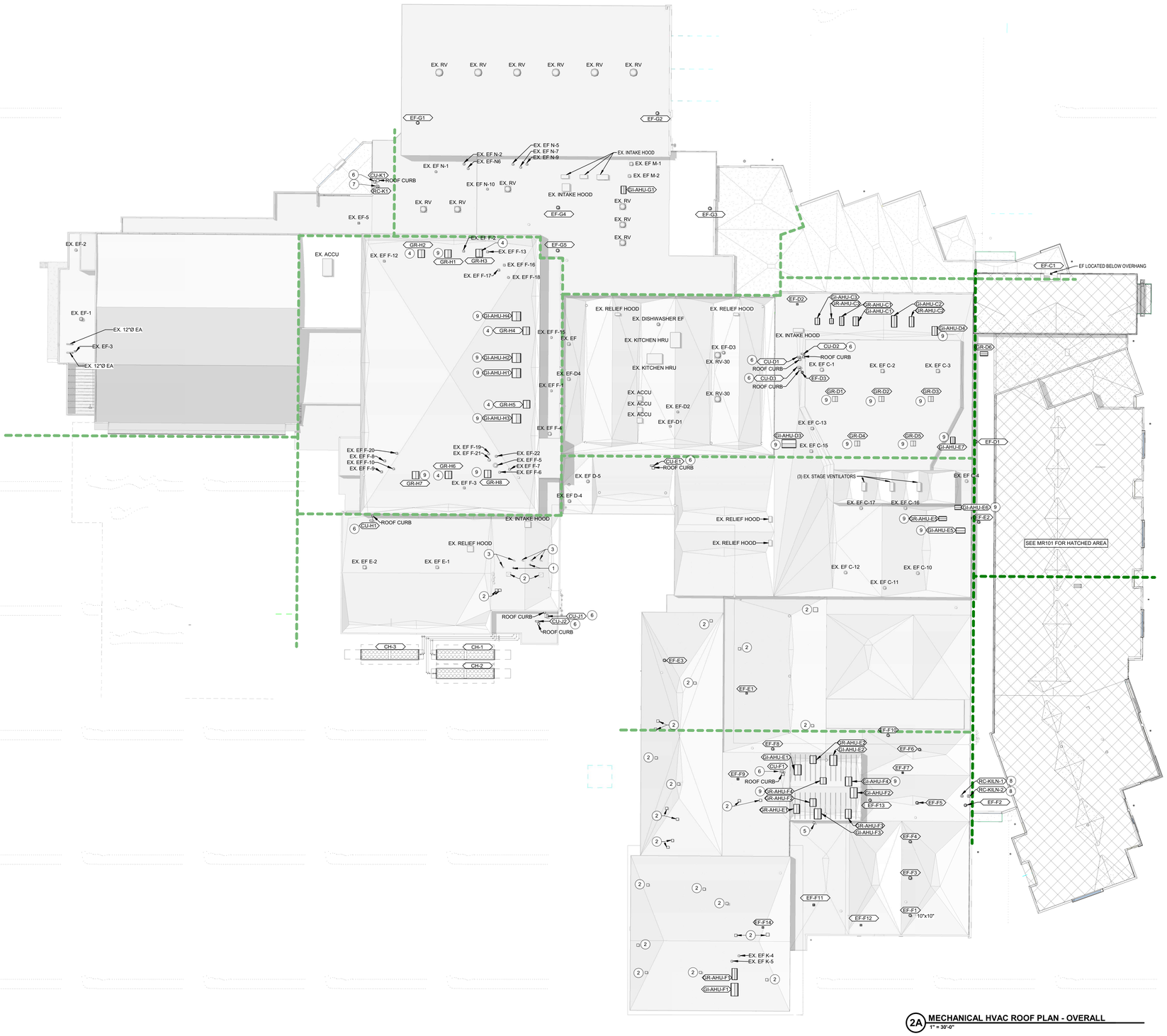

2A **MECHANICAL HVAC ROOF PLAN - OVERALL**
1" = 30'-0"

SCHMIDT ASSOCIATES
415 Massachusetts Avenue
Indianapolis, IN 46204
www.schmidt-arch.com

Project No. 2018-050.LNH
Project Date 07.06.2020
Produced BAW AJE

SARAH KATHLEEN HEMPSTEAD REGISTERED NO. AR10400134 STATE OF INDIANA ARCHITECT

These Drawings and Specifications, and all copies thereof are and shall remain the property and copyright of the Architect. They shall be used only with respect to this Project and are not to be used on any other Project or Work without prior written permission from the Architect.

#	Revision	Date
A2	ADDENDUM #2	07.23.2020

7802 Hague Road
Indianapolis, IN 46256

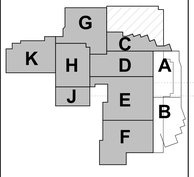

KEY PLAN

MSD OF LAWRENCE TOWNSHIP

ADDITIONS AND RENOVATIONS TO LAWRENCE NORTH HIGH SCHOOL

MECHANICAL ROOF PLAN

MR102

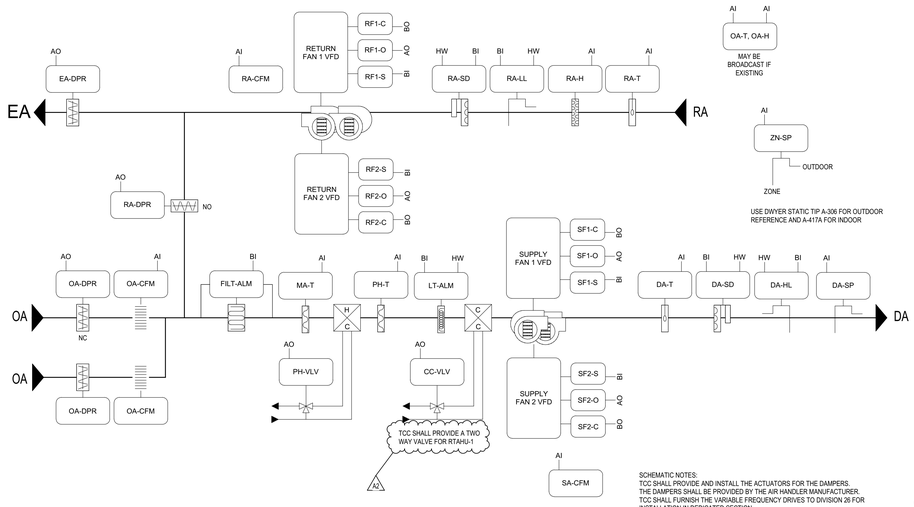

SCHEMATIC NOTES:
TCC SHALL PROVIDE AND INSTALL THE ACTUATORS FOR THE DAMPERS.
THE DAMPERS SHALL BE PROVIDED BY THE AIR HANDLER MANUFACTURER.
TCC SHALL FURNISH THE VARIABLE FREQUENCY DRIVES TO DIVISION 26 FOR INSTALLATION IN DEDICATED SECTION.
TCC CONTROLS TO BE MOUNTED WITHIN THE AHU CONTROLS CABINET.
DIV 26 TO PROVIDE POWER TO VFDS.
TCC SHALL EXTEND BACnet MSTP TO EACH VFD.

1D RTAHU-1 (SERVES UNIT B - VAV BOXES), RTAHU-2 (SERVES UNIT A - VAV BOXES)
NOT TO SCALE

RTAHU-1 & 2 SEQUENCE OF OPERATION

SUPPLY FAN START/STOP: THE SUPPLY FAN (SF-C) WILL BE STARTED ACCORDING TO THE SCHEDULE, MANUALLY AS SELECTED BY THE OPERATOR. MINIMUM RUN TIME SHALL BE 30 MINUTES (ADJ). IF THE SUPPLY FAN STATUS (SF-S) DOES NOT MATCH THE COMMANDED VALUE, AN ALARM SHALL BE GENERATED. WHEN THE SUPPLY FAN STATUS INDICATES THE FAN STARTED, THE CONTROL SEQUENCE WILL BE ENABLED.

RETURN FAN START/STOP: WHEN THE SUPPLY FAN (SF-C) IS STARTED, A START COMMAND TO THE RETURN FAN (RFn-C) WILL BE SENT. IF THE RETURN FAN STATUS (RFn-S) DOES NOT MATCH THE COMMANDED VALUE, AN ALARM WILL BE GENERATED.

STATIC PRESSURE CONTROL: THE SUPPLY FAN (SF-O) WILL MODULATE TO MAINTAIN THE DISCHARGE STATIC PRESSURE (DA-SP) AT SETPOINT. THE INITIAL SETPOINT MAXIMUM SHALL BE 1.5" WITH A MINIMUM OF .5". BOTH SETTINGS SHALL BE DETERMINED BY THE BALANCE CONTRACTOR. SENSOR SHALL BE LOCATED 2/3 OF THE WAY DOWN THE MAIN DUCT RUN.

THE SYSTEM WILL SAMPLE THE VAV BOX DAMPER POSITIONS EVERY TWO MINUTES AND THE FAN SPEED WILL BE RESET AS FOLLOWS:
THE SUPPLY FAN STATIC WILL BE INCREASED IN INCREMENTS OF .1" IF THE SECOND HIGHEST BOX DAMPER POSITION IS GREATER THAN 80% OPEN.

THE SUPPLY FAN STATIC WILL REMAIN AS IS IF THE SECOND HIGHEST DAMPER POSITION IS BETWEEN 60% AND 80% OPEN.
THE SUPPLY FAN STATIC WILL BE DECREASED IN INCREMENTS OF .1" IF THE SECOND HIGHEST DAMPER POSITION IS LESS THAT 60% OPEN.

RETURN FAN TRACKING: THE RETURN FAN WILL MODULATE (RFn-O) IN CONJUNCTION WITH THE SUPPLY FAN. THE RETURN FAN WILL LAG THE SUPPLY FAN BY A SET DIFFERENTIAL INITIALLY SET AT 10% OF THE SUPPLY FAN FLOW. DIFFERENTIAL SHALL BE MEASURED BETWEEN THE SUPPLY CFM (SA-CFM) AND THE RETURN CFM (RA-CFM). TEST AND BALANCE CONTRACTOR SHALL PROVIDE FINAL DIFFERENTIAL SETTING THAT SHALL PROVIDE A SLIGHTLY POSITIVE STATIC PRESSURE IN THE SPACE OF +0.05" W.C.

DISCHARGE TEMPERATURE CONTROL: THE MIXED AIR DAMPERS (OA,RA-DPR), PREHEAT VALVE (PH-VLV) AND COOLING VALVE (CLG-VLV) SHALL MODULATE TO MAINTAIN THE FOLLOWING DISCHARGE AIR TEMPERATURE SCHEDULE:

OUTSIDE AIR TEMPERATURE	DISCHARGE TEMPERATURE
0F	60F
70F	55F

ECONOMIZER SWITCHOVER: WHEN THE OUTSIDE AIR ENTHALPY (OA-T, OA-H) IS BELOW THE RETURN AIR ENTHALPY (RA-T, RA-H), THE ECONOMIZER MODE SHALL BE ENABLED.

OUTSIDE AIR DAMPER CONTROL: THE OUTDOOR AIR DAMPER (OA-DPR) SHALL MODULATE TO MAINTAIN THE MINIMUM OUTDOOR AIR CFM (OA-CFM) REQUIRED AS SHOWN IN THE AHU SCHEDULE.

MIXED AIR CONTROL: THE MIXED AIR SENSOR (MA-T) SHALL PREVENT THE MIXED AIR TEMPERATURE FROM DROPPING BELOW 50F (ADJ).

MORNING WARM-UP: A MORNING WARMUP CYCLE SHALL BE IMPLEMENTED. UPON TRANSITION FROM UNOCCUPIED TO OCCUPIED MODE, FANS TURN ON, OUTSIDE AIR DAMPER REMAINS CLOSED, RETURN AIR DAMPER REMAINS OPEN AND THE PREHEAT COIL VALVE SHALL MODULATE TO MAINTAIN A DISCHARGE OF 90F (ADJ). UNIT REMAINS IN THIS MODE UNTIL THE RETURN AIR TEMPERATURE (RA-T) REACHES THE MORNING WARMUP CYCLE TERMINATION SETPOINT OF 70F (ADJ). UPON REACHING THIS SETPOINT, THE AIR HANDLING UNIT ENTERS ITS NORMAL OCCUPIED MODE OF OPERATION (DISCHARGE TEMPERATURE CONTROL).

SAFETY: ALL OF THE SAFETY DEVICES ARE MANUAL RESET. THE DEVICES SHALL PREVENT THE AIR HANDLING UNIT FROM RUNNING. MANUAL RESET SHALL ALLOW THE AIR HANDLING UNIT TO RESTART. THE SUPPLY FAN WILL BE SHUTDOWN IF ANY OF THE FOLLOWING OCCUR:
-IF A TEMPERATURE LOW LIMIT (LT-ALM) SWITCH SENSES A TEMPERATURE BELOW 38F (ADJ). LOW LIMIT TO BE LOCATED ON THE DISCHARGE SIDE OF THE PREHEAT COIL.
-IF A FIRE ALARM (DA-SD, RA-SD) SHUTDOWN CONTACT IS PROVIDED.
-IF A HIGH OR LOW STATIC PRESSURE SWITCH (SP-HL, RA-LL) LOCATED AFTER THE SUPPLY FAN AND BEFORE THE RETURN FAN SENSES A DISCHARGE PRESSURE THAT IS GREATER THAN 5" W.C. (ADJ)

SHUTDOWN: WHEN THE UNIT IS SHUTDOWN BY EITHER A STOP COMMAND OR SYSTEM SAFETY THE UNIT WILL BE SET AS FOLLOWS:
SUPPLY FAN WILL BE OFF
OUTSIDE AIR DAMPER WILL CLOSE
RETURN AIR DAMPER WILL OPEN
CHILLED WATER VALVE SHALL CLOSE
PREHEAT VALVE SHALL MODULATE TO MAINTAIN A PREHEAT DISCHARGE TEMPERATURE (PH-T) OF 60F (ADJ)
BOTH HOT AND CHILLED WATER CONTROL VALVES SHALL BE 3-WAY FOR RTAHU-2.
POINTS LIST: THE POINTS LIST REPRESENTS THE MINIMUM POINTS TO BE PROVIDED AND DISPLAYED IN THE SYSTEM GRAPHICS. ADDITIONAL POINTS REQUIRED TO MEET THE SEQUENCE SHALL BE PROVIDED AND ALSO SHOWN.

	Hardware Points				Software Points						
Point Name	AI	AO	BI	BO	AV	HW	Loop	Sched	Trend	Alarm	Show On Graphic
Outside Air Temperature (OA-T)	x								x		x
Outside Air Humidity (OA-H)	x								x		x
Mixed Air Temperature (MA-T)	x								x	x	x
Return Air Humidity (RA-H)	x								x		x
Return Air Temperature (RA-T)	x								x		x
Supply Air Temperature (DA-T)	x								x		x
Preheat Discharge Air Temperature (PH-T)	x								x		x
Space Static Pressure (ZN-SP)	x								x		x
Supply Air Static Pressure (DA-SP)	x								x	x	x
Return Airflow (RA-CFM)	x								x		x
Supply Airflow (SA-CFM)	x								x		x
Outside Airflow (OA-CFM)	x								x		x
Cooling Valve (CC-VLV)			x						x		x
Preheat Valve (PH-VLV)			x						x		x
Outside Air Damper (OA-DPR) QTY 2			x						x		x
Return Air Damper (RA-DPR)			x						x		x
Exhaust Air Damper (EA-DPR)			x						x		x
Supply Fan VFD Speed (SFn-O) QTY 2			x						x		x
Return Fan VFD Speed (RFn-O) QTY 2			x						x		x
Freezestat (LT-ALM) QTY AS APPROPRIATE				x			x		x	x	x
Smoke Detector (RA-SD, DA-SD)				x			x		x	x	x
Supply Fan Status (SFn-S) QTY 4				x					x		x
Return Fan Status (RFn-S) QTY 4				x					x		x
High Static Shutdown (DA-HL)				x			x		x	x	x
Low Static Shutdown (RA-LL)				x			x		x	x	x
Filter Alarm (FILT-ALM)				x					x	x	x
Supply Fan Start/Stop (SFn-C) QTY 2									x		x
Return Fan Start/Stop (RFn-C) QTY 2									x		x

	Hardware Points				Software Points						
Point Name	AI	AO	BI	BO	AV	BV	Loop	Sched	Trend	Alarm	Show On Graphic
Economizer Mixed Air Temp Setpoint					x				x		x
Morning Warmup DAT Setpoint					x				x		x
Outside Airflow Setpoint					x				x		x
Supply Airflow Setpoint					x				x		x
Return Airflow Setpoint					x				x		x
Supply Air Temperature Setpoint					x				x		x
Emergency Shutdown						x			x	x	x
High Mixed Air Temperature						x				x	
High Return Air Humidity						x				x	
High Return Air Temperature						x				x	
High Return Airflow						x				x	
High Supply Air Temperature						x				x	
Low Mixed Air Temperature						x				x	
Low Return Air Temperature						x				x	
Low Supply Air Temperature						x				x	
Supply Fan Failure						x				x	
Supply Fan in Hand						x				x	
Supply Fan Runtime Exceeded						x				x	
Return Fan Failure						x				x	
Return Fan in Hand						x				x	
Return Fan Runtime Exceeded						x				x	
Occupied						x		x	x		x

AHU-E5 SEQUENCE OF OPERATION

SUPPLY FAN START/STOP: THE SUPPLY FAN (SFn-C) WILL BE STARTED ACCORDING TO THE SCHEDULE OR MANUALLY AS SELECTED BY THE OPERATOR. THE OCCUPANCY SENSOR USED FOR LIGHTING SHALL SETBACK/SETUP THE SETPOINTS BY 2F (ADJ) IF THE LIGHTING IS DISABLED DURING THE OCCUPANCY SCHEDULE. THE SAME SENSOR SHALL SETBACK/SETUP THE SETPOINTS BY 4F (ADJ) IF THE LIGHTING IS DISABLED DURING THE UNOCCUPIED SCHEDULE. A DIFFERENTIAL SHALL BE PROVIDED TO PREVENT THE AHU FROM CYCLING BETWEEN THIS MODE. IF THE SUPPLY FAN STATUS (SFn-S) DOES NOT MATCH THE COMMANDED VALUE, AN ALARM WILL BE GENERATED. WHEN THE SUPPLY FAN STATUS INDICATES THE FAN STARTED, THE CONTROL SEQUENCE WILL BE ENABLED. SUPPLY FAN SPEED (SFn-O) SHALL BE SET BY THE TEST AND BALANCE CONTRACTOR.

RETURN FAN START/STOP: WHEN THE SUPPLY FAN (SFn-C) IS STARTED, A START COMMAND TO THE RETURN FAN (RFn-C) WILL BE SENT. IF THE RETURN FAN STATUS (RFn-S) DOES NOT MATCH THE COMMANDED VALUE, AN ALARM WILL BE GENERATED.

OCCUPIED COOLING MODE: SUPPLY FAN SHALL START (SFn-C) AT FULL COOLING DEMAND WITH OUTDOOR AIR DAMPER OPEN AT MINIMUM POSITION (UNLESS ECONOMIZER IS ENABLED) AND FAN SPEED (SFn-O) AT 100%. DECREASES IN COOLING DEMAND SHALL DECREASE FAN SPEED FROM FULL SPEED DOWN TO MINIMUM SPEED (25% OF FULL SPEED). FURTHER DECREASES IN COOLING DEMAND SHALL BE WITH THE FAN SPEED AT MINIMUM AND THE COOLING CONTROL VALVE (CLG-VLV) POSITION MODULATING IN RESPONSE TO THE ZONE SETPOINT (ADJ). OCCUPIED COOLING SETPOINT SHALL BE 74F (ADJ) WITH OCCUPANCY. THE SETPOINT SHALL BE 76F (ADJ) WITHOUT OCCUPANCY.

UNOCCUPIED COOLING MODE: SUPPLY FAN SHALL START AT 60% SPEED WITH THE OUTSIDE AIR DAMPERS CLOSED (UNLESS ECONOMIZER IS ENABLED). DECREASES IN COOLING DEMAND SHALL DECREASE FAN SPEED FROM 60% DOWN TO MINIMUM SPEED (25% OF FULL SPEED). FURTHER DECREASES IN COOLING DEMAND SHALL BE WITH THE FAN SPEED AT MINIMUM AND THE CHILLED WATER CONTROL VALVE POSITION MODULATING IN RESPONSE TO THE ZONE SETPOINT. UNOCCUPIED COOLING SETPOINT SHALL BE 78F (ADJ).

OCCUPIED HEATING MODE: SUPPLY FAN SHALL START AT FULL HEATING DEMAND WITH OUTDOOR AIR DAMPER OPEN AT MINIMUM POSITION AND FAN AT 100% SPEED. DECREASES IN HEATING DEMAND SHALL BE WITH THE FAN AT 100% SPEED AND THE PREHEAT COIL (PH-VLV) MODULATING IN RESPONSE TO THE ZONE SETPOINT. DISCHARGE AIR TEMPERATURE SHALL NOT EXCEED 95F. OCCUPIED HEATING SETPOINT SHALL BE 70F (ADJ). THE SETPOINT SHALL BE 68F (ADJ) WITHOUT OCCPANCY.

UNOCCUPIED HEATING MODE: SUPPLY FAN SHALL START AT 60% SPEED WITH THE OUTSIDE AIR DAMPERS CLOSED. DECREASES IN HEATING DEMAND SHALL BE WITH THE FAN SPEED AT 60% AND THE PREHEAT COIL MODULATING IN THE SAME MANNER AS IN OCCUPIED HEATING MODE. UNOCCUPIED HEATING SETPOINT SHALL BE 66F (ADJ).

ZONE HUMIDITY CONTROL: IF THE ZONE HUMIDITY (ZN-H) RISES ABOVE SETPOINT, THE SUPPLY FAN SPEED SHALL SET TO 50% OF THE MAXIMUM SPEED AS ESTABSLIHED BY THE TEST AND BALANCE CONTRACTOR, THE COOLING VALVE SHALL MODULATE OPEN TO MAINTAIN A COOLING COIL DISCHARGE TEMPERATURE (CC-T) OF 53F AND THE REHEAT VALVE (RH-VLV) WILL MODULATE TO MAINTAIN THE ZONE TEMPERATURE. A DIFFERENTIAL SHALL BE PROVIDED TO PREVENT THE UNIT FROM CYCLING BETWEEN THIS MODE.

ENTHALPY SWITCHOVER: WHEN THE SHARED OUTSIDE AIR ENTHALPY (OA-T, OA-H) IS BELOW THE RETURN AIR ENTHALPY (RA-T, RA-H), THE ECONOMIZER WILL BE ENABLED. WHEN THE SHARED OUTSIDE AIR ENTHALPY RISES ABOVE THE RETURN AIR ENTHALPY, THE ECONOMIZER WILL BE DISABLED.

A2

ZONE CARBON DIOXIDE CONTROL: WHEN THE ZONE CARBON DIOXIDE LEVEL (ZN-CO2) EXCEEDS THE SETPOINT OF 1000PPM, THE MIXED AIR DAMPERS SHALL BRING IN MORE OUTSIDE AIR SUBJECT TO A MIXED AIR TEMPERATURE (MA-T) LOW LIMIT OF 53F. OUTSIDE AIR DAMPER SHALL BE CAPABLE OF CLOSING IF CO2 LEVELS ARE BELOW 900PPM. A DIFFERENTIAL SHALL BE PUT IN PLACE TO PREVENT CYCLING OF DAMPERS IN THIS MODE.

PREHEAT COIL CIRCULATING PUMP: THE PREHEAT COIL CIRCULATING PUMP (P1-C) SHALL RUN CONSTANTLY ANYTIME THE OUTSIDE AIR TEMPERATURE IS BELOW 35F. AN ALARM SHALL BE GENERATED IF THE STATUS DOES NOT MATCH THE COMMAND.

MORNING WARM-UP: A MORNING WARMUP CYCLE SHALL BE IMPLEMENTED. UPON TRANSITION FROM UNOCCUPIED TO OCCUPIED MODE, FANS TURN ON, OUTSIDE AND EXHAUST AIR DAMPERS REMAIN CLOSED, RETURN AIR DAMPER REMAINS OPEN, PREHEAT VALVE IS DRIVEN FULLY OPEN SUBJECT TO A HIGH LIMIT DISCHARGE OF 90F (ADJ) AND COOLING VALVE IS FULLY CLOSED. UNIT REMAINS IN THIS MODE UNTIL THE RETURN AIR TEMPERATURE (RA-T) REACHES THE MORNING WARMUP CYCLE TERMINATION SETPOINT OF 70F (ADJ). UPON REACHING THIS SETPOINT, THE AIR HANDLING UNIT ENTERS ITS NORMAL OCCUPIED MODE OF OPERATION (ZONE TEMPERATURE CONTROL).

SAFETY: ALL OF THE SAFETY DEVICES ARE MANUAL RESET; THE DEVICE THAT HAS TRIPPED MUST BE MANUALLY RESET BEFORE RESTARTING THE AIR HANDLING UNIT.
IF A FIRE ALARM (DA-SD, RA-SD) SHUTDOWN CONTACT IS PROVIDED, THE SUPPLY FAN AND RETURN FAN WILL BE SHUTDOWN WHEN TRIGGERED.

SHUTDOWN: WHEN THE UNIT IS SHUTDOWN BY EITHER A STOP COMMAND OR SYSTEM SAFETY THE UNIT WILL BE SET AS FOLLOWS:
SUPPLY AND RETURN FAN SHALL BE OFF
OUTSIDE AND EXHAUST AIR DAMPER SHALL CLOSE
RETURN AIR DAMPER SHALL OPEN
COOLING AND REHEAT VALVE SHALL CLOSE
PREHEAT VALVE SHALL MODULATE TO MAINTAIN A PREHEAT DISCHARGE TEMPERATURE (PH-T) OF 60F (ADJ)

POINTS LIST: THE POINTS LIST REPRESENTS THE MINIMUM POINTS TO BE PROVIDED AND DISPLAYED IN THE SYSTEM GRAPHICS. ADDITIONAL POINTS REQUIRED TO MEET THE SEQUENCE SHALL BE PROVIDED AND ALSO SHOWN.

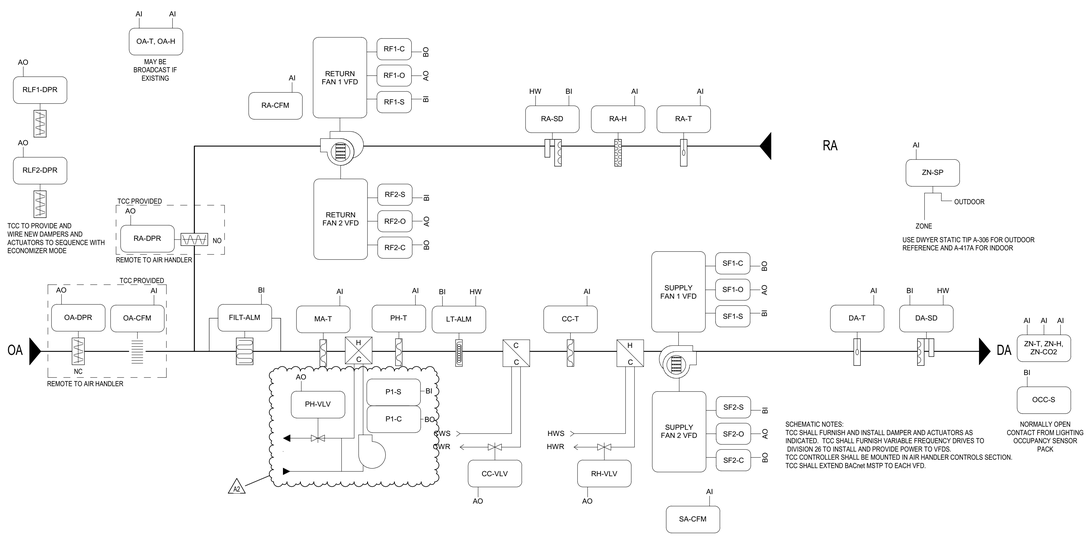

SCHEMATIC NOTES:
TCC SHALL FURNISH AND INSTALL DAMPER AND ACTUATORS AS INDICATED. TCC SHALL FURNISH VARIABLE FREQUENCY DRIVES TO DIVISION 26 TO INSTALL AND PROVIDE POWER TO VFDS.
TCC CONTROLLER SHALL BE MOUNTED IN AIR HANDLER CONTROLS SECTION.
TCC SHALL EXTEND BACnet MSTP TO EACH VFD.

1A AHU E5
NOT TO SCALE

	Hardware Points				Software Points						
Point Name	AI	AO	BI	BO	AV	BV	Loop	Sched	Trend	Alarm	Show On Graphic
Outside Air Temperature (OA-T)	x								x		x
Outside Air Humidity (OA-H)	x								x		x
Mixed Air Temperature (MA-T)	x								x		x
Outside Airflow (OA-CFM)	x								x	x	x
Return Air Humidity (RA-H)	x								x		x
Return Air Temperature (RA-T)	x								x		x
Supply Air Temperature (DA-T)	x								x		x
Preheat Discharge Air Temperature (PH-T)	x								x		x
Cooling Discharge Air Temperature (CC-T)	x								x		x
Space Temperature (ZN-T)	x								x		x
Space Humidity (ZN-H)	x								x	x	x
Zone Carbon Dioxide (ZN-CO2)	x								x	x	x
Zone Static Pressure (ZN-SP)	x								x	x	x
Supply Airflow (SA-CFM)	x								x		x
Return Airflow (RA-CFM)	x								x		x
Cooling Valve (CC-VLV)		x							x		x
Preheat Valve (PH-VLV)		x							x		x
Reheat Valve (RH-VLV)		x							x		x
Outside Air Damper (OA-DPR)		x							x		x
Return Air Damper (RA-DPR)		x							x		x
Supply Fan VFD Speed (SFn-O) QTY 2		x							x		x
Return Fan VFD Speed (RFn-O) QTY 2		x							x		x
~~Relief Damper (RFn-DPR) QTY 2~~		~~x~~							~~x~~		~~x~~
Circulation Pump Status (P1-S)			x						x		x
~~Freezestat (LT-ALM)~~			~~x~~						~~x~~		~~x~~
Smoke Detector (RA-SD, DA-SD)			x						x	x	x
Supply Fan Status (SFn-S) QTY 2			x						x		x
Return Fan Status (RFn-S) QTY 2			x						x		x
Occupancy Sensor (OCC-S)			x						x		x
Filter Alarm (FILT-ALM)			x						x	x	x
Supply Fan Start/Stop (SFn-C) QTY 2				x					x		x
~~Return Fan Start/Stop (RFn-C) QTY 2~~				~~x~~					~~x~~		~~x~~
Circulation Pump Start/Stop (P1-C)				x					x		x

	Hardware Points				Software Points						
Point Name	AI	AO	BI	BO	AV	BV	Loop	Sched	Trend	Alarm	Show On Graphic
Economizer Mixed Air Temp Setpoint						x			x		x
Outside Airflow Setpoint						x			x		x
Supply Air Temperature Setpoint						x			x		x
Emergency Shutdown									x	x	x
High Mixed Air Temperature						x				x	
High Return Air Humidity						x				x	
High Return Air Temperature						x				x	
High Return Airflow						x				x	
High Supply Air Temperature						x				x	
Low Mixed Air Temperature						x				x	
Low Return Air Temperature						x				x	
Low Supply Air Temperature						x				x	
Supply Fan Failure						x				x	
Supply Fan in Hand						x				x	
Supply Fan Runtime Exceeded						x				x	

SCHMIDT ASSOCIATES
415 Massachusetts Avenue
Indianapolis, IN 46204
www.schmidt-arch.com

Project No. 2018-050.LNH
Project Date 07.06.2020
Produced DLM

SARAH KATHLEEN HEMPSTEAD REGISTERED NO. AR10400134 STATE OF INDIANA ARCHITECT

Sarah K Hempstead

These Drawings and Specifications, and all copies thereof are and shall remain the property and copyright of the Architect. They shall be used only with respect to this Project and are not to be used on any other Project or Work without prior written permission from the Architect.

#	Revision	Date
A2	ADDENDUM #2	07.23.2020

7802 Hague Road
Indianapolis, IN 46256

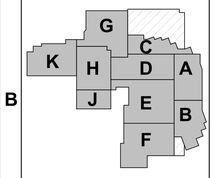

KEY PLAN

N

MSD OF LAWRENCE TOWNSHIP

ADDITIONS AND RENOVATIONS TO LAWRENCE NORTH HIGH SCHOOL

TEMPERATURE CONTROLS SCHEMATICS

M-702

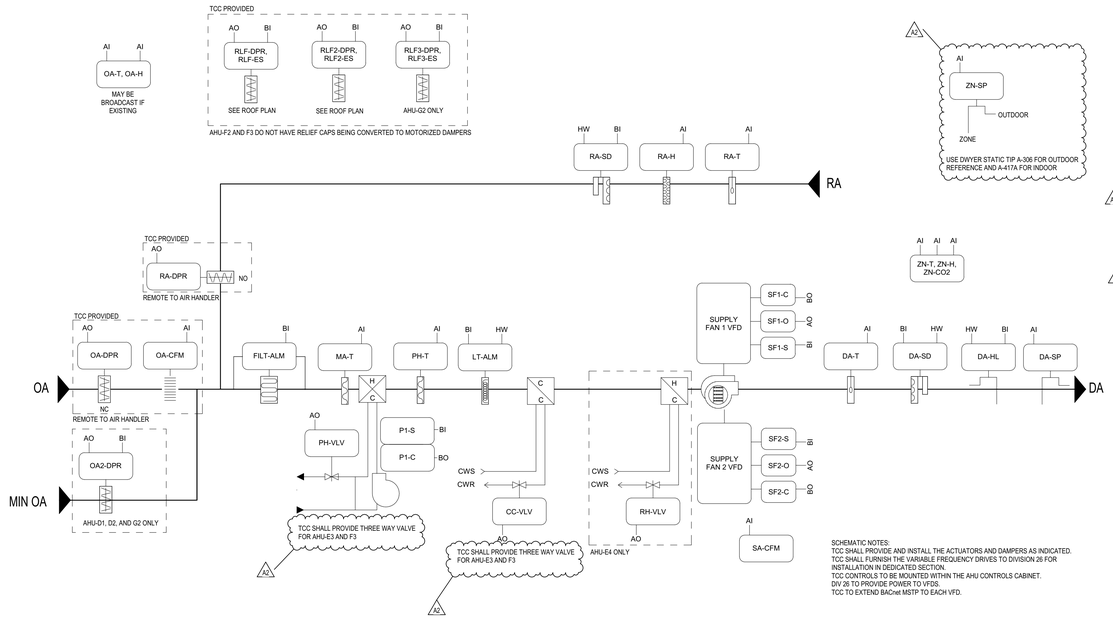

SCHEMATIC NOTES:
TCC SHALL PROVIDE AND INSTALL THE ACTUATORS AND DAMPERS AS INDICATED.
TCC SHALL FURNISH THE VARIABLE FREQUENCY DRIVES TO DIVISION 26 FOR INSTALLATION IN DEDICATED SECTION.
TCC CONTROLS TO BE MOUNTED WITHIN THE AHU CONTROLS CABINET.
DIV 26 TO PROVIDE POWER TO VFDS.
TCC TO EXTEND BACnet MSTP TO EACH VFD.

1D AHU D1, D2, D4, E3, E4, F2, F3, AND G2
NOT TO SCALE

AHU-D1, D2, D4, E3, E4, F2, F3, AND G2 SEQUENCE OF OPERATION

SUPPLY FAN START/STOP: THE SUPPLY FAN (SF-C) WILL BE STARTED ACCORDING TO THE SCHEDULE, MANUALLY AS SELECTED BY THE OPERATOR. MINIMUM RUN TIME SHALL BE 30 MINUTES (ADJ). IF THE SUPPLY FAN STATUS (SF-S) DOES NOT MATCH THE COMMANDED VALUE, AN ALARM SHALL BE GENERATED. WHEN THE SUPPLY FAN STATUS INDICATES THE FAN STARTED, THE CONTROL SEQUENCE WILL BE ENABLED.

STATIC PRESSURE CONTROL: THE SUPPLY FAN (SF-O) WILL MODULATE TO MAINTAIN THE DISCHARGE STATIC PRESSURE (DA-SP) AT SETPOINT. THE INITIAL SETPOINT MAXIMUM SHALL BE 1.5" WITH A MINIMUM OF .5". BOTH SETTINGS SHALL BE DETERMINED BY THE BALANCE CONTRACTOR. SENSOR SHALL BE LOCATED 2/3 OF THE WAY DOWN THE MAIN DUCT RUN.

THE SYSTEM WILL SAMPLE THE VAV BOX DAMPER POSITIONS EVERY TWO MINUTES AND THE FAN SPEED WILL BE RESET AS FOLLOWS:
THE SUPPLY FAN STATIC WILL BE DECREASED IN INCREMENTS OF .1" IF THE SECOND HIGHEST BOX DAMPER POSITION IS GREATER THAN 80% OPEN.

THE SUPPLY FAN STATIC WILL REMAIN AS IS IF THE SECOND HIGHEST DAMPER POSITION IS BETWEEN 60% AND 80% OPEN.
THE SUPPLY FAN STATIC WILL BE DECREASED IN INCREMENTS OF .1" IF THE SECOND HIGHEST DAMPER POSITION IS LESS THAT 60% OPEN.

DISCHARGE TEMPERATURE CONTROL: THE MIXED AIR DAMPERS (OA,RA-DPR), PREHEAT VALVE (PH-VLV) AND COOLING VALVE (CLG-VLV) SHALL MODULATE TO MAINTAIN THE FOLLOWING DISCHARGE AIR TEMPERATURE SCHEDULE:

OUTSIDE AIR TEMPERATURE	DISCHARGE TEMPERATURE
0F	62F
70F	55F

A2 **ECONOMIZER SWITCHOVER**: WHEN THE OUTSIDE AIR ENTHALPY (OA-T, OA-H) IS BELOW THE RETURN AIR ENTHALPY (RA-T, RA-H), THE ECONOMIZER MODE SHALL BE ENABLED.
RELIEF DAMPER CONTROL: SPACE STATIC PRESSURE SENSOR SHALL CONTROL THE THREE RELIEF DAMPERS IN STAGES AS REQUIRED TO MAINTAIN SLIGHTLY POSITIVE PRESSURE.
OUTSIDE AIR DAMPER CONTROL: THE OUTDOOR AIR DAMPER (OA-DPR) SHALL MODULATE TO MAINTAIN THE MINIMUM OUTDOOR AIR CFM (OA-CFM) REQUIRED AS SHOWN IN THE AHU SCHEDULE.

MIXED AIR CONTROL: THE MIXED AIR SENSOR (MA-T) SHALL PREVENT THE MIXED AIR TEMPERATURE FROM DROPPING BELOW 50F (ADJ).

A2 **ZONE HUMIDITY CONTROL (AHU-E4 ONLY)**: IF THE ZONE HUMIDITY (ZN-H) RISES ABOVE SETPOINT, THE SUPPLY FAN SPEED SHALL SET TO 50% OF THE MAXIMUM SPEED AS ESTABLISHED BY THE TEST AND BALANCE CONTRACTOR. THE COOLING VALVE SHALL MODULATE OPEN TO MAINTAIN A COOLING COIL DISCHARGE TEMPERATURE (CC-T) OF 53F AND THE REHEAT VALVE (RH-VLV) WILL MODULATE TO MAINTAIN THE ZONE TEMPERATURE. A DIFFERENTIAL SHALL BE PROVIDED TO PREVENT THE UNIT FROM CYCLING BETWEEN THIS MODE.
PREHEAT COIL CIRCULATING PUMP: THE PREHEAT COIL CIRCULATING PUMP (P1-C) SHALL RUN CONSTANTLY ANYTIME THE OUTSIDE AIR TEMPERATURE IS BELOW 35F. AN ALARM SHALL BE GENERATED IF THE STATUS DOES NOT MATCH THE COMMAND.
MORNING WARMUP: A MORNING WARMUP CYCLE SHALL BE IMPLEMENTED, UPON TRANSITION FROM UNOCCUPIED TO OCCUPIED MODE. FANS TURN ON, OUTSIDE AIR DAMPER REMAINS CLOSED, RETURN AIR DAMPER REMAINS OPEN AND THE PREHEAT COIL VALVE SHALL MODULATE TO MAINTAIN A DISCHARGE OF 90F (ADJ). UNIT REMAINS IN THIS MODE UNTIL THE RETURN AIR TEMPERATURE (RA-T) REACHES THE MORNING WARMUP CYCLE TERMINATION SETPOINT OF 70F (ADJ). UPON REACHING THIS SETPOINT, THE AIR HANDLING UNIT ENTERS ITS NORMAL OCCUPIED MODE OF OPERATION (DISCHARGE TEMPERATURE CONTROL).

SAFETY: ALL OF THE SAFETY DEVICES ARE MANUAL RESET; THE DEVICES SHALL PREVENT THE AIR HANDLING UNIT FROM RUNNING. MANUAL RESET SHALL ALLOW THE AIR HANDLING UNIT TO RESTART. THE SUPPLY FAN WILL BE SHUTDOWN IF ANY OF THE FOLLOWING OCCUR:
-IF A TEMPERATURE LOW LIMIT (LT-ALM) SWITCH SENSES A TEMPERATURE BELOW 38F (ADJ). LOW LIMIT TO BE LOCATED ON THE DISCHARGE SIDE OF THE PREHEAT COIL.
-IF A FIRE ALARM (DA-SD, RA-SD) SHUTDOWN CONTACT IS PROVIDED.
-IF A HIGH OR LOW STATIC PRESSURE SWITCH (SP-HL, RA-LL) LOCATED AFTER THE SUPPLY FAN AND BEFORE THE RETURN FAN SENSES A DISCHARGE PRESSURE THAT IS GREATER THAN 5" W.C. (ADJ)

SHUTDOWN: WHEN THE UNIT IS SHUTDOWN BY EITHER A STOP COMMAND OR SYSTEM SAFETY THE UNIT WILL BE SET AS FOLLOWS:
SUPPLY FAN WILL BE OFF
OUTSIDE AIR DAMPER WILL CLOSE
RETURN AIR DAMPER WILL OPEN
CHILLED WATER VALVE SHALL CLOSE
PREHEAT VALVE SHALL MODULATE TO MAINTAIN A PREHEAT DISCHARGE TEMPERATURE (PH-T) OF 60F (ADJ)

POINTS LIST: THE POINTS LIST REPRESENTS THE MINIMUM POINTS TO BE PROVIDED AND DISPLAYED IN THE SYSTEM GRAPHICS. ADDITIONAL POINTS REQUIRED TO MEET THE SEQUENCE SHALL BE PROVIDED AND ALSO SHOWN.

	Hardware Points				Software Points						
Point Name	AI	AO	BI	BO	AV	BV	Loop	Sched	Trend	Alarm	Show On Graphic
Outside Air Temperature (OA-T)	x								x		x
Outside Air Humidity (OA-H)	x								x		x
Mixed Air Temperature (MA-T)	x								x		x
Outside Airflow (OA-CFM)	x								x	x	x
Return Air Humidity (RA-H)	x								x		x
Return Air Temperature (RA-T)	x								x		x
Supply Air Temperature (DA-T)	x								x		x
Preheat Discharge Air Temperature (PH-T)	x								x		x
Space Temperature (ZN-T)	x								x		x
Space Humidity (ZN-H)	x								x	x	x
Zone Carbon Dioxide (ZN-CO2)	x								x	x	x
Supply Airflow (SA-CFM)	x								x		x
Discharge Air Static Pressure (DA-SP)	x								x		x
Zone Static Pressure (ZN-SP)	x								x		x
Cooling Valve (CC-VLV)		x							x		x
Heating Valve (PH-VLV)		x							x		x
Outside Air Damper (OA-DPR)		x							x		x
Return Air Damper (RA-DPR)		x							x		x
Supply Fan VFD Speed (SFn-O) QTY 4		x							x		x
Relief Damper (RLF-DPR)		x							x		x
Freezestat (LT-ALM) QTY AS APPROPRIATE			x						x	x	x
Smoke Detector (RA-SD, DA-SD)			x						x	x	x
Supply Fan Status (SFn-S) QTY 4			x						x		x
Circulation Pump Status (P1-S)			x						x		x
Relief Damper End Switch (RLF-ES)			x						x		x
Filter Alarm (FILT-ALM)			x						x	x	x
High Static Pressure (DA-HL)			x						x	x	x
Supply Fan Start/Stop (SFn-C) QTY 4				x					x		x
Circulation Pump Start/Stop (P1-C)				x					x		x

	Hardware Points				Software Points						
Point Name	AI	AO	BI	BO	AV	BV	Loop	Sched	Trend	Alarm	Show On Graphic
Economizer Mixed Air Temp Setpoint					x				x		x
Outside Airflow Setpoint					x				x		x
Supply Air Temperature Setpoint					x				x		x
Emergency Shutdown						x			x	x	x
High Mixed Air Temperature						x				x	
High Return Air Humidity						x				x	
High Return Air Temperature						x				x	
High Return Airflow						x				x	
High Supply Air Temperature						x				x	
Low Mixed Air Temperature						x				x	
Low Return Air Temperature						x				x	
Low Supply Air Temperature						x				x	
Supply Fan Failure						x				x	
Supply Fan in Hand						x				x	
Supply Fan Runtime Exceeded						x				x	

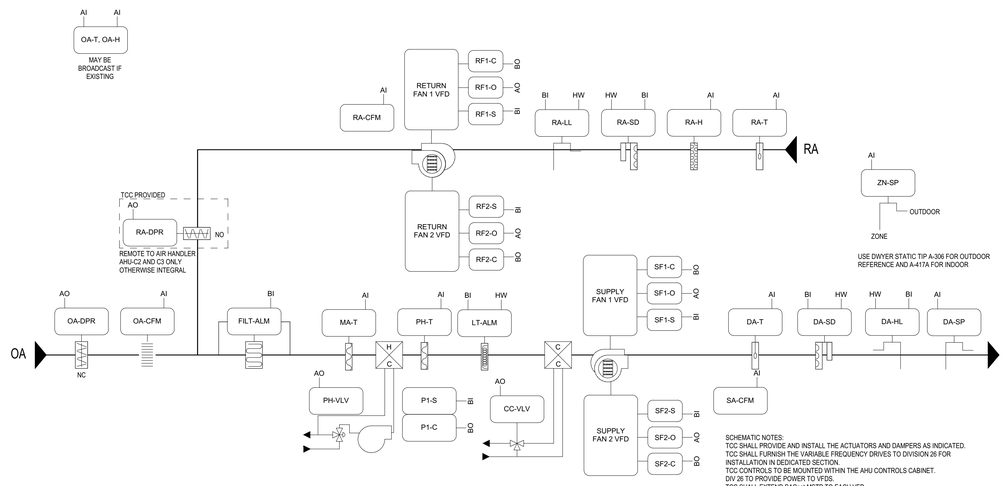

SCHEMATIC NOTES:
TCC SHALL PROVIDE AND INSTALL THE ACTUATORS AND DAMPERS AS INDICATED.
TCC SHALL FURNISH THE VARIABLE FREQUENCY DRIVES TO DIVISION 26 FOR INSTALLATION IN DEDICATED SECTION.
TCC CONTROLS TO BE MOUNTED WITHIN THE AHU CONTROLS CABINET.
DIV 26 TO PROVIDE POWER TO VFDS.
TCC SHALL EXTEND BACnet MSTP TO EACH VFD.

1A AHU C2, C3, E1, E2, F1, AND F4
NOT TO SCALE

AHU-C2, C3, E1, E2, F1, AND F4 SEQUENCE OF OPERATION

SUPPLY FAN START/STOP: THE SUPPLY FAN (SF-C) WILL BE STARTED ACCORDING TO THE SCHEDULE, MANUALLY AS SELECTED BY THE OPERATOR. MINIMUM RUN TIME SHALL BE 30 MINUTES (ADJ). IF THE SUPPLY FAN STATUS (SF-S) DOES NOT MATCH THE COMMANDED VALUE, AN ALARM SHALL BE GENERATED. WHEN THE SUPPLY FAN STATUS INDICATES THE FAN STARTED, THE CONTROL SEQUENCE WILL BE ENABLED.

RETURN FAN START/STOP: WHEN THE SUPPLY FAN (SF-C) IS STARTED, A START COMMAND TO THE RETURN FAN (RFn-C) WILL BE SENT. IF THE RETURN FAN STATUS (RFn-S) DOES NOT MATCH THE COMMANDED VALUE, AN ALARM WILL BE GENERATED.

STATIC PRESSURE CONTROL: THE SUPPLY FAN (SF-O) WILL MODULATE TO MAINTAIN THE DISCHARGE STATIC PRESSURE (DA-SP) AT SETPOINT. THE INITIAL SETPOINT MAXIMUM SHALL BE 1.5" WITH A MINIMUM OF .5". BOTH SETTINGS SHALL BE DETERMINED BY THE BALANCE CONTRACTOR. SENSOR SHALL BE LOCATED 2/3 OF THE WAY DOWN THE MAIN DUCT RUN.

THE SYSTEM WILL SAMPLE THE VAV BOX DAMPER POSITIONS EVERY TWO MINUTES AND THE FAN SPEED WILL BE RESET AS FOLLOWS:
THE SUPPLY FAN STATIC WILL BE INCREASED IN INCREMENTS OF .1" IF THE SECOND HIGHEST BOX DAMPER POSITION IS GREATER THAN 80% OPEN.

THE SUPPLY FAN STATIC WILL REMAIN AS IS IF THE SECOND HIGHEST DAMPER POSITION IS BETWEEN 60% AND 80% OPEN.
THE SUPPLY FAN STATIC WILL BE DECREASED IN INCREMENTS OF .1" IF THE SECOND HIGHEST DAMPER POSITION IS LESS THAT 60% OPEN.

RETURN FAN TRACKING: THE RETURN FAN WILL MODULATE (RFn-O) IN CONJUNCTION WITH THE SUPPLY FAN. THE RETURN FAN WILL LAG THE SUPPLY FAN BY A SET DIFFERENTIAL INITIALLY SET AT 10% OF THE SUPPLY FAN FLOW. DIFFERENTIAL SHALL BE MEASURED BETWEEN THE SUPPLY CFM (SA-CFM) AND THE RETURN CFM (RA-CFM). TEST AND BALANCE CONTRACTOR SHALL PROVIDE FINAL DIFFERENTIAL SETTING THAT SHALL PROVIDE A SLIGHTLY POSITIVE STATIC PRESSURE IN THE SPACE OF +0.05" W.C.

DISCHARGE TEMPERATURE CONTROL: THE MIXED AIR DAMPERS (OA,RA-DPR), PREHEAT VALVE (PH-VLV) AND COOLING VALVE (CLG-VLV) SHALL MODULATE TO MAINTAIN THE FOLLOWING DISCHARGE AIR TEMPERATURE SCHEDULE:

OUTSIDE AIR TEMPERATURE	DISCHARGE TEMPERATURE
0F	62F
70F	55F

ECONOMIZER SWITCHOVER: WHEN THE OUTSIDE AIR ENTHALPY (OA-T, OA-H) IS BELOW THE RETURN AIR ENTHALPY (RA-T, RA-H), THE ECONOMIZER MODE SHALL BE ENABLED.

OUTSIDE AIR DAMPER CONTROL: THE OUTDOOR AIR DAMPER (OA-DPR) SHALL MODULATE TO MAINTAIN THE MINIMUM OUTDOOR AIR CFM (OA-CFM) REQUIRED AS SHOWN IN THE AHU SCHEDULE.

MIXED AIR CONTROL: THE MIXED AIR SENSOR (MA-T) SHALL PREVENT THE MIXED AIR TEMPERATURE FROM DROPPING BELOW 50F (ADJ).

A2 **RELIEF DAMPER CONTROL**: SEE MISCELLENEOUS SCOPE OF WORK FOR STATIC PRESSURE SENSOR REQUIREMENTS AND FOR CONTROL OF THE ASSOCIATED RELIEF DAMPER.
PREHEAT COIL CIRCULATING PUMP: THE PREHEAT COIL CIRCULATING PUMP (P1-C) SHALL RUN CONSTANTLY ANYTIME THE OUTSIDE AIR TEMPERATURE IS BELOW 35F. AN ALARM SHALL BE GENERATED IF THE STATUS DOES NOT MATCH THE COMMAND.
MORNING WARM-UP: A MORNING WARMUP CYCLE SHALL BE IMPLEMENTED, UPON TRANSITION FROM UNOCCUPIED TO OCCUPIED MODE. FANS TURN ON, OUTSIDE AIR DAMPER REMAINS CLOSED, RETURN AIR DAMPER REMAINS OPEN AND THE PREHEAT COIL VALVE SHALL MODULATE TO MAINTAIN A DISCHARGE OF 90F (ADJ). UNIT REMAINS IN THIS MODE UNTIL THE RETURN AIR TEMPERATURE (RA-T) REACHES THE MORNING WARMUP CYCLE TERMINATION SETPOINT OF 70F (ADJ). UPON REACHING THIS SETPOINT, THE AIR HANDLING UNIT ENTERS ITS NORMAL OCCUPIED MODE OF OPERATION (DISCHARGE TEMPERATURE CONTROL).

SAFETY: ALL OF THE SAFETY DEVICES ARE MANUAL RESET; THE DEVICES SHALL PREVENT THE AIR HANDLING UNIT FROM RUNNING. MANUAL RESET SHALL ALLOW THE AIR HANDLING UNIT TO RESTART. THE SUPPLY FAN WILL BE SHUTDOWN IF ANY OF THE FOLLOWING OCCUR:
-IF A TEMPERATURE LOW LIMIT (LT-ALM) SWITCH SENSES A TEMPERATURE BELOW 38F (ADJ). LOW LIMIT TO BE LOCATED ON THE DISCHARGE SIDE OF THE PREHEAT COIL.
-IF A FIRE ALARM (DA-SD, RA-SD) SHUTDOWN CONTACT IS PROVIDED.
-IF A HIGH OR LOW STATIC PRESSURE SWITCH (SP-HL, RA-LL) LOCATED AFTER THE SUPPLY FAN AND BEFORE THE RETURN FAN SENSES A DISCHARGE PRESSURE THAT IS GREATER THAN 5" W.C. (ADJ)

SHUTDOWN: WHEN THE UNIT IS SHUTDOWN BY EITHER A STOP COMMAND OR SYSTEM SAFETY THE UNIT WILL BE SET AS FOLLOWS:
SUPPLY FAN WILL BE OFF
OUTSIDE AIR DAMPER WILL CLOSE
RETURN AIR DAMPER WILL OPEN
CHILLED WATER VALVE SHALL CLOSE
PREHEAT VALVE SHALL MODULATE TO MAINTAIN A PREHEAT DISCHARGE TEMPERATURE (PH-T) OF 60F (ADJ)

BOTH HOT AND CHILLED WATER CONTROL VALVES SHALL BE 3 WAY.

POINTS LIST: THE POINTS LIST REPRESENTS THE MINIMUM POINTS TO BE PROVIDED AND DISPLAYED IN THE SYSTEM GRAPHICS. ADDITIONAL POINTS REQUIRED TO MEET THE SEQUENCE SHALL BE PROVIDED AND ALSO SHOWN.

	Hardware Points				Software Points						
Point Name	AI	AO	BI	BO	AV	BV	Loop	Sched	Trend	Alarm	Show On Graphic
Outside Air Temperature (OA-T)	x								x		x
Outside Air Humidity (OA-H)	x								x		x
Mixed Air Temperature (MA-T)	x								x		x
Outside Airflow (OA-CFM)	x								x	x	x
Return Air Humidity (RA-H)	x								x		x
Return Air Temperature (RA-T)	x								x		x
Supply Air Temperature (DA-T)	x								x		x
Preheat Discharge Air Temperature (PH-T)	x								x		x
Space Static Pressure (ZN-SP)	x								x		x
Supply Airflow (SA-CFM)	x								x		x
Return Airflow (RA-CFM)	x								x		x
Discharge Air Static Pressure (DA-SP)	x								x		x
Cooling Valve (CC-VLV)		x							x		x
Heating Valve (PH-VLV)		x							x		x
Outside Air Damper (OA-DPR)		x							x		x
Return Air Damper (RA-DPR)		x							x		x
Supply Fan VFD Speed (SFn-O) QTY 2		x							x		x
Return Fan VFD Speed (RFn-O) QTY 2		x							x		x
Freezestat (LT-ALM) QTY AS APPROPRIATE			x						x	x	x
Smoke Detector (RA-SD, DA-SD)			x						x	x	x
Supply Fan Status (SFn-S) QTY 2			x						x		x
Return Fan Status (RFn-S) QTY 2			x						x		x
Circulation Pump Status (P1-S)			x						x		x
Filter Alarm (FILT-ALM)			x						x	x	x
High and Low Static Pressure (DA-HL,RA-LL)			x						x	x	x
Supply Fan Start/Stop (SFn-C) QTY 2				x					x		x
Return Fan Start/Stop (RFn-C) QTY 2				x					x		x
Circulation Pump Start/Stop (P1-C)				x					x		x

	Hardware Points				Software Points						
Point Name	AI	AO	BI	BO	AV	BV	Loop	Sched	Trend	Alarm	Show On Graphic
Economizer Mixed Air Temp Setpoint					x				x		x
Outside Airflow Setpoint					x				x		x
Supply Air Temperature Setpoint					x				x		x
Emergency Shutdown						x			x	x	x
High Mixed Air Temperature						x				x	
High Return Air Humidity						x				x	
High Return Air Temperature						x				x	
High Return Airflow						x				x	
High Supply Air Temperature						x				x	
Low Mixed Air Temperature						x				x	
Low Return Air Temperature						x				x	
Low Supply Air Temperature						x				x	
Supply Fan Failure						x				x	
Supply Fan in Hand						x				x	
Supply Fan Runtime Exceeded						x				x	
Return Fan Failure						x				x	
Return Fan in Hand						x				x	
Return Fan Runtime Exceeded						x				x	

SCHMIDT ASSOCIATES
415 Massachusetts Avenue
Indianapolis, IN 46204
www.schmidt-arch.com

Project No. 2018-050.LNH
Project Date 07.06.2020
Produced DLM

SARAH KATHLEEN HEMPSTEAD REGISTERED NO. AR10400134 STATE OF INDIANA ARCHITECT

These Drawings and Specifications, and all copies thereof are and shall remain the property and copyright of the Architect. They shall be used only with respect to this Project and are not to be used on any other Project or Work without prior written permission from the Architect.

#	Revision	Date
A2	ADDENDUM #2	07.23.2020

7802 Hague Road
Indianapolis, IN 46256

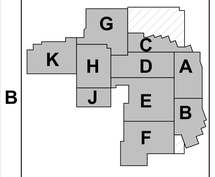

KEY PLAN

MSD OF LAWRENCE TOWNSHIP

ADDITIONS AND RENOVATIONS TO LAWRENCE NORTH HIGH SCHOOL

TEMPERATURE CONTROLS SCHEMATICS

M-703

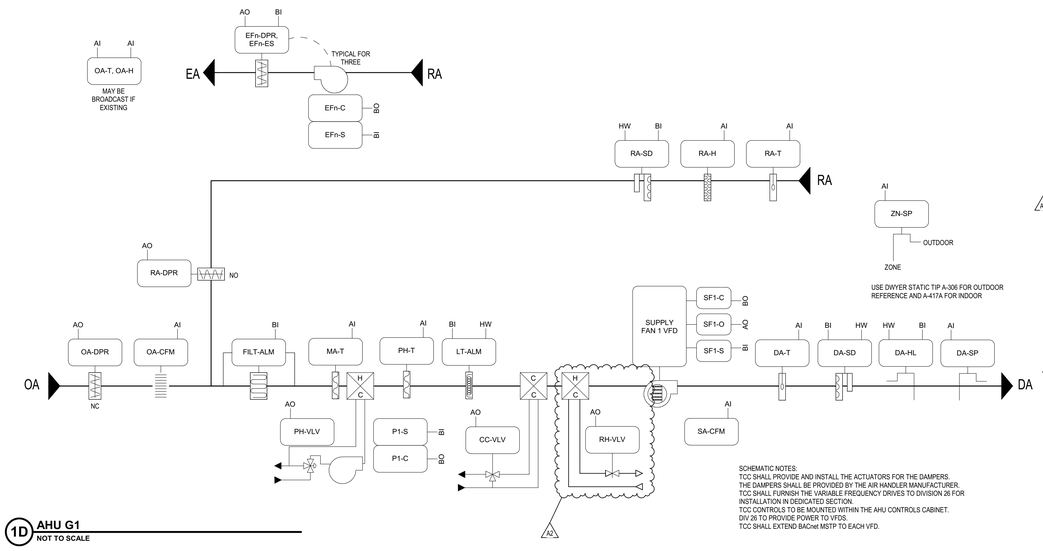

SCHEMATIC NOTES:
TCC SHALL PROVIDE AND INSTALL THE ACTUATORS FOR THE DAMPERS.
THE DAMPERS SHALL BE PROVIDED BY THE AIR HANDLER MANUFACTURER.
TCC SHALL FURNISH THE VARIABLE FREQUENCY DRIVES TO DIVISION 26 FOR INSTALLATION IN DEDICATED SECTION.
TCC CONTROLS TO BE MOUNTED WITHIN THE AHU CONTROLS CABINET.
DIV 26 TO PROVIDE POWER TO VFDS.
TCC SHALL EXTEND BACnet MSTP TO EACH VFD.

1D AHU G1
NOT TO SCALE

AHU-G1 SEQUENCE OF OPERATION

SUPPLY FAN START/STOP: THE SUPPLY FAN (SF-C) WILL BE STARTED ACCORDING TO THE SCHEDULE, AND/OR MANUALLY AS SELECTED BY THE OPERATOR. MINIMUM RUN TIME SHALL BE 30 MINUTES (ADJ.). IF THE SUPPLY FAN STATUS (SF-S) DOES NOT MATCH THE COMMANDED VALUE, AN ALARM SHALL BE GENERATED. WHEN THE SUPPLY FAN STATUS INDICATES THE FAN STARTED, THE CONTROL SEQUENCE WILL BE ENABLED.

STATIC PRESSURE CONTROL: THE SUPPLY FAN (SF-O) WILL MODULATE TO MAINTAIN THE DISCHARGE STATIC PRESSURE (DA-SP) AT SETPOINT. THE INITIAL SETPOINT MAXIMUM SHALL BE 1.5". WITH A MINIMUM OF .5". BOTH SETTINGS SHALL BE DETERMINED BY THE BALANCE CONTRACTOR. SENSOR SHALL BE LOCATED 2/3 OF THE WAY DOWN THE MAIN DUCT RUN.

THE SYSTEM WILL SAMPLE THE VAV BOX DAMPER POSITIONS EVERY TWO MINUTES AND THE FAN SPEED WILL BE RESET AS FOLLOWS:
THE SUPPLY FAN STATIC WILL BE INCREASED IN INCREMENTS OF .1" IF THE SECOND HIGHEST BOX DAMPER POSITION IS GREATER THAN 80% OPEN.

THE SUPPLY FAN STATIC WILL REMAIN AS IS IF THE SECOND HIGHEST DAMPER POSITION IS BETWEEN 60% AND 80% OPEN.
THE SUPPLY FAN STATIC WILL BE DECREASED IN INCREMENTS OF .1" IF THE SECOND HIGHEST DAMPER POSITION IS LESS THAT 60% OPEN.

DISCHARGE TEMPERATURE CONTROL: THE MIXED AIR DAMPERS (OA,RA-DPR), PREHEAT VALVE (PH-VLV) AND COOLING VALVE (CLG-VLV) SHALL MODULATE TO MAINTAIN THE FOLLOWING DISCHARGE AIR TEMPERATURE SCHEDULE:

OUTSIDE AIR TEMPERATURE	DISCHARGE TEMPERATURE
0F	62F
70F	55F

ECONOMIZER SWITCHOVER: WHEN THE OUTSIDE AIR ENTHALPY (OA-T, OA-H) IS BELOW THE RETURN AIR ENTHALPY (RA-T, RA-H), THE ECONOMIZER MODE SHALL BE ENABLED.

OUTSIDE AIR DAMPER CONTROL: THE OUTDOOR AIR DAMPER (OA-DPR) SHALL MODULATE TO MAINTAIN THE MINIMUM OUTDOOR AIR CFM (OA-CFM) REQUIRED AS SHOWN IN THE AHU SCHEDULE.

A2

MIXED AIR CONTROL: THE MIXED AIR SENSOR (MA-T) SHALL PREVENT THE MIXED AIR TEMPERATURE FROM DROPPING BELOW 50F (ADJ).
RELIEF DAMPER CONTROL: SPACE STATIC PRESSURE SENSOR SHALL CONTROL THE THREE EXHAUST FANS IN STAGES AS REQUIRED TO MAINTAIN SLIGHTLY POSITIVE PRESSURE. ROTATE LEAD/LAG/STANDBY WEEKLY FOR EQUAL RUNTIME.

MORNING WARM-UP: A MORNING WARMUP CYCLE SHALL BE IMPLEMENTED, UPON TRANSITION FROM UNOCCUPIED TO OCCUPIED MODE. FANS TURN ON. OUTSIDE AIR DAMPER REMAINS CLOSED. RETURN AIR DAMPER REMAINS OPEN AND THE PREHEAT COIL VALVE SHALL MODULATE TO MAINTAIN A DISCHARGE OF 90F (ADJ). UNIT REMAINS IN THIS MODE UNTIL THE RETURN AIR TEMPERATURE (RA-T) REACHES THE MORNING WARMUP CYCLE TERMINATION SETPOINT OF 70F (ADJ). UPON REACHING THIS SETPOINT, THE AIR HANDLING UNIT ENTERS ITS NORMAL OCCUPIED MODE OF OPERATION (DISCHARGE TEMPERATURE CONTROL).

SAFETY: ALL OF THE SAFETY DEVICES ARE MANUAL RESET; THE DEVICES SHALL PREVENT THE AIR HANDLING UNIT FROM RUNNING. MANUAL RESET SHALL ALLOW THE AIR HANDLING UNIT TO RESTART. THE SUPPLY FAN WILL BE SHUTDOWN IF ANY OF THE FOLLOWING OCCUR:
-IF A TEMPERATURE LOW LIMIT (LT-ALM) SWITCH SENSES A TEMPERATURE BELOW 38F (ADJ). LOW LIMIT TO BE LOCATED ON THE DISCHARGE SIDE OF THE PREHEAT COIL.
-IF A FIRE ALARM (DA-SD, RA-SD) SHUTDOWN CONTACT IS PROVIDED.
-IF A HIGH OR LOW STATIC PRESSURE SWITCH (SP-HL, RA-LL) LOCATED AFTER THE SUPPLY FAN AND BEFORE THE RETURN FAN SENSES A DISCHARGE PRESSURE THAT IS GREATER THAN 5" W.C. (ADJ)

A2

SHUTDOWN: WHEN THE UNIT IS SHUTDOWN BY EITHER A STOP COMMAND OR SYSTEM SAFETY THE UNIT WILL BE SET AS FOLLOWS:
SUPPLY FAN WILL BE OFF
OUTSIDE AIR DAMPER WILL CLOSE
RETURN AIR DAMPER WILL OPEN
CHILLED WATER VALVE SHALL CLOSE.
PREHEAT VALVE SHALL MODULATE TO MAINTAIN A PREHEAT DISCHARGE TEMPERATURE (PH-T) OF 60F (ADJ)
BOTH PREHEAT AND CHILLED WATER CONTROL VALVES SHALL BE 3 WAY.

PREHEAT COIL CIRCULATING PUMP: THE PREHEAT COIL CIRCULATING PUMP (P1-C) SHALL RUN CONSTANTLY ANYTIME THE OUTSIDE AIR TEMPERATURE IS BELOW 35F. AN ALARM SHALL BE GENERATED IF THE STATUS DOES NOT MATCH THE COMMAND.

POINTS LIST: THE POINTS LIST REPRESENTS THE MINIMUM POINTS TO BE PROVIDED AND DISPLAYED IN THE SYSTEM GRAPHICS. ADDITIONAL POINTS REQUIRED TO MEET THE SEQUENCE SHALL BE PROVIDED AND ALSO SHOWN.

	Hardware Points				Software Points						
Point Name	AI	AO	BI	BO	AV	BV	Loop	Sched	Trend	Alarm	Show On Graphic
Outside Air Temperature (OA-T)	x								x		x
Outside Air Humidity (OA-H)	x								x		x
Mixed Air Temperature (MA-T)	x								x		x
Outside Airflow (OA-CFM)	x								x	x	x
Return Air Humidity (RA-H)	x								x		x
Return Air Temperature (RA-T)	x								x		x
Supply Air Temperature (DA-T)	x								x		x
Preheat Discharge Air Temperature (PH-T)	x								x		x
Zone Static Pressure (ZN-SP)	x								x		x
Supply Airflow (SA-CFM)	x								x		x
Discharge Air Static Pressure (DA-SP)	x								x		x
Cooling Valve (CC-VLV)		x							x		x
Preheat Valve (PH-VLV)		x							x		x
Outside Air Damper (OA-DPR)		x							x		x
Return Air Damper (RA-DPR)		x							x		x
Supply Fan VFD Speed (SFn-O)		x							x		x
~~Exhaust Fan Damper (EFn-DPR) QTY 3~~	~~x~~								~~x~~		~~x~~
Reheat Valve (RH-VLV)		x							x		x
~~Freezestat (LT-ALM) QTY As APPROPRIATE~~			~~x~~						~~x~~	~~x~~	~~x~~
Smoke Detector (RA-SD, DA-SD)			x						x	x	x
Supply Fan Status (SFn-S)			x						x		x
Circulation Pump Status (P1-S)			x						x		x
Exhaust Fan Status (EFn-S) QTY 3			x						x		x
Exhaust Fan Damper End Switch (EFn-ES) QTY 3			x						x		x
Filter Alarm (FILT-ALM)			x						x	x	x
High Static Pressure (DA-HL)			x						x	x	x
Supply Fan Start/Stop (SFn-C)				x					x		x
Circulation Pump Start/Stop (P1-C)				x					x		x
Exhaust Fan Start/Stop (EFn-C) QTY 3				x					x		x

	Hardware Points				Software Points						
Point Name	AI	AO	BI	BO	AV	BV	Loop	Sched	Trend	Alarm	Show On Graphic
Economizer Mixed Air Temp Setpoint					x				x		x
Outside Airflow Setpoint					x				x		x
Supply Air Temperature Setpoint					x				x		x
Emergency Shutdown						x			x	x	x
High Mixed Air Temperature						x				x	
High Return Air Humidity						x				x	
High Return Air Temperature						x				x	
High Return Airflow						x				x	
High Supply Air Temperature						x				x	
Low Mixed Air Temperature						x				x	
Low Return Air Temperature						x				x	
Low Supply Air Temperature						x				x	
Supply Fan Failure						x				x	
Supply Fan in Hand						x				x	
Supply Fan Runtime Exceeded						x				x	

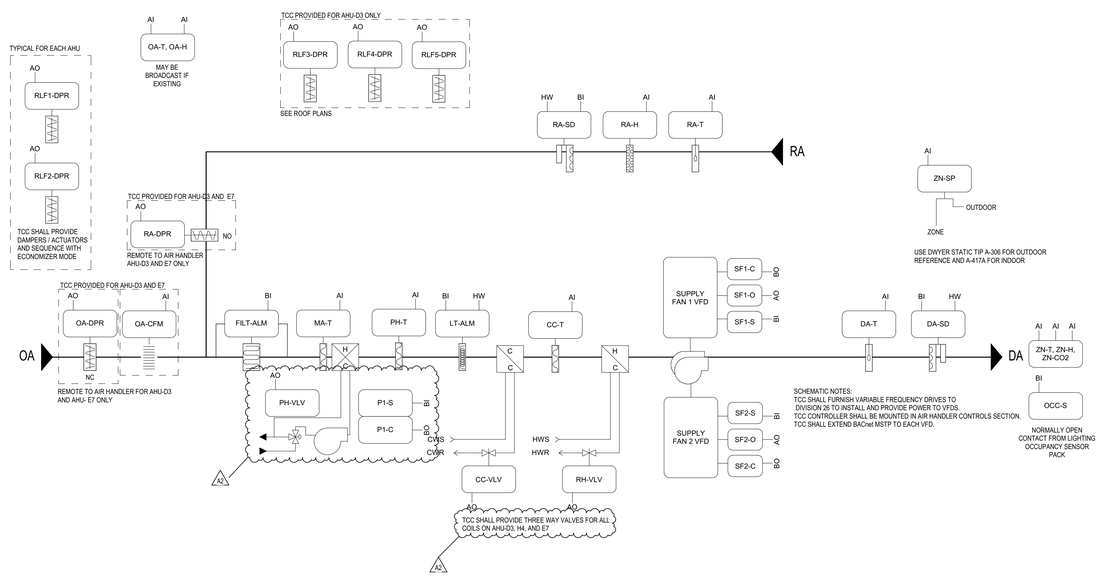

SCHEMATIC NOTES:
TCC SHALL FURNISH VARIABLE FREQUENCY DRIVES TO DIVISION 26 TO INSTALL AND PROVIDE POWER TO VFDS.
TCC CONTROLLER SHALL BE MOUNTED IN AIR HANDLER CONTROLS SECTION.
TCC SHALL EXTEND BACnet MSTP TO EACH VFD.

1A AHU D3 (4 SFANs/2 VFDs), H1, H2, H3, H4, E7
NOT TO SCALE

AHU-D3, H1, H2, H3, H4, AND E7 SEQUENCE OF OPERATION

SUPPLY FAN STARTSTOP: THE SUPPLY FAN (SF-C) WILL BE STARTED ACCORDING TO THE SCHEDULE OR MANUALLY AS SELECTED BY THE OPERATOR. THE OCCUPANCY SENSOR USED FOR LIGHTING SHALL SETBACK/SETUP THE SETPOINTS BY 2F (ADJ) IF THE LIGHTING IS DISABLED DURING THE OCCUPANCY SCHEDULE. THE SAME SENSOR SHALL SETBACK/SETUP THE SETPOINTS BY 4F (ADJ) IF THE LIGHTING IS DISABLED DURING THE UNOCCUPIED SCHEDULE. A DIFFERENTIAL SHALL BE PROVIDED TO PREVENT THE AHU FROM CYCLING BETWEEN THIS MODE. IF THE SUPPLY FAN STATUS (SF-S) DOES NOT MATCH THE COMMANDED VALUE, AN ALARM WILL BE GENERATED. WHEN THE SUPPLY FAN STATUS INDICATES THE FAN STARTED, THE CONTROL SEQUENCE WILL BE ENABLED. SUPPLY FAN SPEED (SF-O) SHALL BE SET BY THE TEST AND BALANCE CONTRACTOR.

OCCUPIED COOLING MODE: SUPPLY FAN SHALL START (SFn-C) AT FULL COOLING DEMAND WITH OUTDOOR AIR DAMPER OPEN AT MINIMUM POSITION (UNLESS ECONOMIZER IS ENABLED) AND FAN SPEED (SFn-O) AT 100%. DECREASES IN COOLING DEMAND SHALL DECREASE FAN SPEED FROM FULL SPEED DOWN TO MINIMUM SPEED (25% OF FULL SPEED). FURTHER DECREASES IN COOLING DEMAND SHALL BE WITH THE FAN SPEED AT MINIMUM AND THE COOLING CONTROL VALVE (CLG-VLV) POSITION MODULATING IN RESPONSE TO THE ZONE SETPOINT (ADJ). OCCUPIED COOLING SETPOINT SHALL BE 74F (ADJ) WITH OCCUPANCY. THE SETPOINT SHALL BE 76F (ADJ) WITHOUT OCCUPANCY.

UNOCCUPIED COOLING MODE: SUPPLY FAN SHALL START AT 60% SPEED WITH THE OUTSIDE AIR DAMPERS CLOSED (UNLESS ECONOMIZER IS ENABLED). DECREASES IN COOLING DEMAND SHALL DECREASE FAN SPEED FROM 60% DOWN TO MINIMUM SPEED (25% OF FULL SPEED). FURTHER DECREASES IN COOLING DEMAND SHALL BE WITH THE FAN SPEED AT MINIMUM AND THE CHILLED WATER CONTROL VALVE POSITION MODULATING IN RESPONSE TO THE ZONE SETPOINT. UNOCCUPIED COOLING SETPOINT SHALL BE 78F (ADJ).

OCCUPIED HEATING MODE: SUPPLY FAN SHALL START AT FULL HEATING DEMAND WITH OUTDOOR AIR DAMPER OPEN AT MINIMUM POSITION AND FAN AT 100% SPEED. DECREASES IN HEATING DEMAND SHALL BE WITH THE FAN AT 100% SPEED AND THE PREHEAT COIL (PH-VLV) MODULATING IN RESPONSE TO THE ZONE SETPOINT. DISCHARGE AIR TEMPERATURE SHALL NOT EXCEED 95F. OCCUPIED HEATING SETPOINT SHALL BE 70F (ADJ). THE SETPOINT SHALL BE 68F (ADJ) WITHOUT OCCPANCY.

UNOCCUPIED HEATING MODE: SUPPLY FAN SHALL START AT 60% SPEED WITH THE OUTSIDE AIR DAMPERS CLOSED. DECREASES IN HEATING DEMAND SHALL BE WITH THE FAN SPEED AT 60% AND THE PREHEAT COIL MODULATING IN THE SAME MANNER AS IN OCCUPIED HEATING MODE. UNOCCUPIED HEATING SETPOINT SHALL BE 66F (ADJ).

ZONE HUMIDITY CONTROL: IF THE ZONE HUMIDITY (ZN-H) RISES ABOVE SETPOINT, THE SUPPLY FAN SPEED SHALL SET TO 50% OF THE MAXIMUM SPEED AS ESTABLISHED BY THE TEST AND BALANCE CONTRACTOR, THE COOLING VALVE SHALL MODULATE OPEN TO MAINTAIN A COOLING COIL DISCHARGE TEMPERATURE (CC-T) OF 55F AND THE REHEAT VALVE (RH-VLV) WILL MODULATE TO MAINTAIN THE ZONE TEMPERATURE. A DIFFERENTIAL SHALL BE PROVIDED TO PREVENT THE UNIT FROM CYCLING BETWEEN THIS MODE.

ENTHALPY SWITCHOVER: WHEN THE SHARED OUTSIDE AIR ENTHALPY (OA-T, OA-H) IS BELOW THE RETURN AIR ENTHALPY (RA-T, RA-H), THE ECONOMIZER WILL BE ENABLED. WHEN THE SHARED OUTSIDE AIR ENTHALPY RISES ABOVE THE RETURN AIR ENTHALPY, THE ECONOMIZER WILL BE DISABLED.

A2

ZONE CARBON DIOXIDE CONTROL: WHEN THE ZONE CARBON DIOXIDE LEVEL (ZN-CO2) EXCEEDS THE SETPOINT OF 1000PPM, THE MIXED AIR DAMPERS SHALL BRING IN MORE OUTSIDE AIR SUBJECT TO A MIXED AIR TEMPERATURE (MA-T) LOW LIMIT OF 53F. OUTSIDE AIR DAMPER SHALL BE CAPABLE OF CLOSING IF CO2 LEVELS ARE BELOW 900PPM. A DIFFERENTIAL SHALL BE PUT IN PLACE TO PREVENT CYCLING OF DAMPERS IN THIS MODE.
PREHEAT COIL CIRCULATING PUMP: THE PREHEAT COIL CIRCULATING PUMP (P1-C) SHALL RUN CONSTANTLY ANYTIME THE OUTSIDE AIR TEMPERATURE IS BELOW 35F. AN ALARM SHALL BE GENERATED IF THE STATUS DOES NOT MATCH THE COMMAND.
MORNING WARM-UP: A MORNING WARMUP CYCLE SHALL BE IMPLEMENTED, UPON TRANSITION FROM UNOCCUPIED TO OCCUPIED MODE. FANS TURN ON, OUTSIDE AND EXHAUST AIR DAMPERS REMAIN CLOSED, RETURN AIR DAMPER REMAINS OPEN, PREHEAT VALVE IS DRIVEN FULLY OPEN SUBJECT TO A HIGH LIMIT DISCHARGE OF 90F (ADJ) AND COOLING VALVE IS FULLY CLOSED. UNIT REMAINS IN THIS MODE UNTIL THE RETURN AIR TEMPERATURE (RA-T) REACHES THE MORNING WARMUP CYCLE TERMINATION SETPOINT OF 70F (ADJ). UPON REACHING THIS SETPOINT, THE AIR HANDLING UNIT ENTERS ITS NORMAL OCCUPIED MODE OF OPERATION (ZONE TEMPERATURE CONTROL).

SAFETY: ALL OF THE SAFETY DEVICES ARE MANUAL RESET; THE DEVICE THAT HAS TRIPPED MUST BE MANUALLY RESET BEFORE RESTARTING THE AIR HANDLING UNIT.
IF A FIRE ALARM (DA-SD, RA-SD) SHUTDOWN CONTACT IS PROVIDED, THE SUPPLY FAN AND RETURN FAN WILL BE SHUTDOWN WHEN TRIGGERED.

SHUTDOWN: WHEN THE UNIT IS SHUTDOWN BY EITHER A STOP COMMAND OR SYSTEM SAFETY THE UNIT WILL BE SET AS FOLLOWS:
SUPPLY AND RETURN FAN SHALL BE OFF
OUTSIDE AND EXHAUST AIR DAMPER SHALL CLOSE
RETURN AIR DAMPER SHALL OPEN
COOLING AND REHEAT VALVE SHALL CLOSE
PREHEAT VALVE SHALL MODULATE TO MAINTAIN A PREHEAT DISCHARGE TEMPERATURE (PH-T) OF 60F (ADJ)

POINTS LIST: THE POINTS LIST REPRESENTS THE MINIMUM POINTS TO BE PROVIDED AND DISPLAYED IN THE SYSTEM GRAPHICS. ADDITIONAL POINTS REQUIRED TO MEET THE SEQUENCE SHALL BE PROVIDED AND ALSO SHOWN.

	Hardware Points				Software Points						
Point Name	AI	AO	BI	BO	AV	BV	Loop	Sched	Trend	Alarm	Show On Graphic
Outside Air Temperature (OA-T)	x								x		x
Outside Air Humidity (OA-H)	x								x		x
Mixed Air Temperature (MA-T)	x								x		x
Outside Airflow (OA-CFM)	x								x	x	x
Return Air Humidity (RA-H)	x								x		x
Return Air Temperature (RA-T)	x								x		x
Supply Air Temperature (DA-T)	x								x		x
Preheat Discharge Air Temperature (PH-T)	x								x		x
Cooling Discharge Air Temperature (CC-T)	x								x		x
Space Temperature (ZN-T)	x								x		x
Space Humidity (ZN-H)	x								x	x	x
Zone Carbon Dioxide (ZN-CO2)	x								x	x	x
Zone Static Pressure (ZN-SP)	x								x	x	x
Cooling Valve (CC-VLV)		x							x		x
Preheat Valve (PH-VLV)		x							x		x
Reheat Valve (RH-VLV)		x							x		x
Outside Air Damper (OA-DPR)		x							x		x
Return Air Damper (RA-DPR)		x							x		x
Supply Fan VFD Speed (SFn-O) QTY 2		x							x		x
~~Exhaust Fan Damper (EFn-DPR) QTY 2~~	~~x~~								~~x~~		~~x~~
Circulation Pump Status (P1-S)			x						x		x
~~Freezestat (LT-ALM)~~				~~x~~					~~x~~	~~x~~	~~x~~
Smoke Detector (RA-SD, DA-SD)			x						x	x	x
Supply Fan Status (SFn-S) QTY 2			x						x		x
Occupancy Sensor (OCC-S)			x						x		x
Filter Alarm (FILT-ALM)			x						x	x	x
~~Supply Fan Start/Stop (SFn-C) QTY 2~~	~~x~~								~~x~~		~~x~~
Circulation Pump Start/Stop (P1-C)				x					x		x

	Hardware Points				Software Points						
Point Name	AI	AO	BI	BO	AV	BV	Loop	Sched	Trend	Alarm	Show On Graphic
Economizer Mixed Air Temp Setpoint					x				x		x
Outside Airflow Setpoint					x				x		x
Supply Air Temperature Setpoint					x				x		x
Emergency Shutdown						x			x	x	x
High Mixed Air Temperature						x				x	
High Return Air Humidity						x				x	
High Return Air Temperature						x				x	
High Return Airflow						x				x	
High Supply Air Temperature						x				x	
Low Mixed Air Temperature						x				x	
Low Return Air Temperature						x				x	
Low Supply Air Temperature						x				x	
Supply Fan Failure						x				x	
Supply Fan in Hand						x				x	
Supply Fan Runtime Exceeded						x				x	

SCHMIDT ASSOCIATES
415 Massachusetts Avenue
Indianapolis, IN 46204
www.schmidt-arch.com

Project No. 2018-050.LNH
Project Date 07.06.2020
Produced DLM

SARAH KATHLEEN HEMPSTEAD REGISTERED NO. AR10400134 STATE OF INDIANA ARCHITECT

These Drawings and Specifications, and all copies thereof are and shall remain the property and copyright of the Architect. They shall be used only with respect to this Project and are not to be used on any other Project or Work without prior written permission from the Architect.

#	Revision	Date
A2	ADDENDUM #2	07.23.2020

7802 Hague Road
Indianapolis, IN 46256

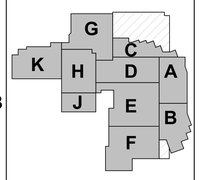

KEY PLAN

MSD OF LAWRENCE TOWNSHIP

ADDITIONS AND RENOVATIONS TO LAWRENCE NORTH HIGH SCHOOL

TEMPERATURE CONTROLS SCHEMATICS

M-704

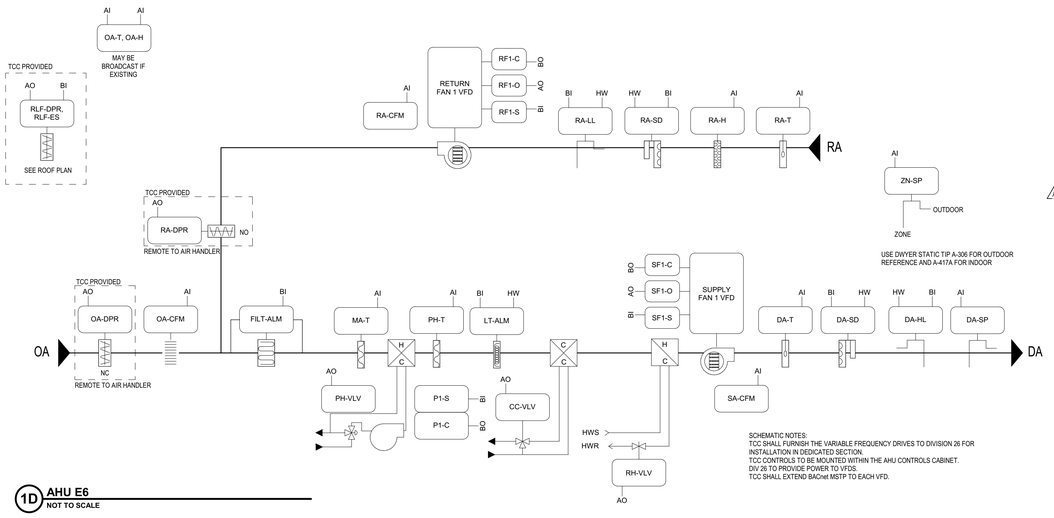

SCHEMATIC NOTES:
TCC SHALL FURNISH THE VARIABLE FREQUENCY DRIVES TO DIVISION 26 FOR INSTALLATION IN DEDICATED SECTION.
TCC CONTROLS TO BE MOUNTED WITHIN THE AHU CONTROLS CABINET.
DIV 26 TO PROVIDE POWER TO VFDS.
TCC SHALL EXTEND BACnet MSTP TO EACH VFD.

1D AHU E6
NOT TO SCALE

AHU-E6 SEQUENCE OF OPERATION

SUPPLY FAN START/STOP: THE SUPPLY FAN (SF-C) WILL BE STARTED ACCORDING TO THE SCHEDULE, MANUALLY AS SELECTED BY THE OPERATOR. MINIMUM RUN TIME SHALL BE 30 MINUTES (ADJ). IF THE SUPPLY FAN STATUS (SF-S) DOES NOT MATCH THE COMMANDED VALUE, AN ALARM SHALL BE GENERATED. WHEN THE SUPPLY FAN STATUS INDICATES THE FAN STARTED, THE CONTROL SEQUENCE WILL BE ENABLED.

RETURN FAN START/STOP: WHEN THE SUPPLY FAN (SF-C) IS STARTED, A START COMMAND TO THE RETURN FAN (RF-C) WILL BE SENT. IF THE RETURN FAN STATUS (RF-S) DOES NOT MATCH THE COMMANDED VALUE, AN ALARM WILL BE GENERATED.

STATIC PRESSURE CONTROL: THE SUPPLY FAN (SF-Q) WILL MODULATE TO MAINTAIN THE DISCHARGE STATIC PRESSURE (DA-SP) AT SETPOINT. THE INITIAL SETPOINT MAXIMUM SHALL BE 1.5" WITH A MINIMUM OF .5". BOTH SETTINGS SHALL BE DETERMINED BY THE BALANCE CONTRACTOR. SENSOR SHALL BE LOCATED 2/3 OF THE WAY DOWN THE MAIN DUCT RUN.

THE SYSTEM WILL SAMPLE THE VAV BOX DAMPER POSITIONS EVERY TWO MINUTES AND THE FAN SPEED WILL BE RESET AS FOLLOWS:
THE SUPPLY FAN STATIC WILL BE INCREASED IN INCREMENTS OF .1" IF THE SECOND HIGHEST BOX DAMPER POSITION IS GREATER THAN 80% OPEN.

THE SUPPLY FAN STATIC WILL REMAIN AS IS IF THE SECOND HIGHEST DAMPER POSITION IS BETWEEN 60% AND 80% OPEN.
THE SUPPLY FAN STATIC WILL BE DECREASED IN INCREMENTS OF .1" IF THE SECOND HIGHEST DAMPER POSITION IS LESS THAT 60% OPEN.

RETURN FAN TRACKING: THE RETURN FAN WILL MODULATE (RF-O) IN CONJUNCTION WITH THE SUPPLY FAN. THE RETURN FAN WILL LAG THE SUPPLY FAN BY A SET DIFFERENTIAL INITIALLY SET AT 10% OF THE SUPPLY FAN FLOW. DIFFERENTIAL SHALL BE MEASURED BETWEEN THE SUPPLY CFM (SA-CFM) AND THE RETURN CFM (RA-CFM). TEST AND BALANCE CONTRACTOR SHALL PROVIDE FINAL DIFFERENTIAL SETTING THAT SHALL PROVIDE A SLIGHTLY POSITIVE STATIC PRESSURE IN THE SPACE OF +0.05" W.C.

DISCHARGE TEMPERATURE CONTROL: THE MIXED AIR DAMPERS (OA,RA-DPR), PREHEAT VALVE (PH-VLV) AND COOLING VALVE (CLG-VLV) SHALL MODULATE TO MAINTAIN THE FOLLOWING DISCHARGE AIR TEMPERATURE SCHEDULE:

OUTSIDE AIR TEMPERATURE	DISCHARGE TEMPERATURE
0F	60F
70F	55F

ECONOMIZER SWITCHOVER: WHEN THE OUTSIDE AIR ENTHALPY (OA-T, OA-H) IS BELOW THE RETURN AIR ENTHALPY (RA-T, RA-H), THE ECONOMIZER MODE SHALL BE ENABLED.

OUTSIDE AIR DAMPER CONTROL: THE OUTDOOR AIR DAMPER (OA-DPR) SHALL MODULATE TO MAINTAIN THE MINIMUM OUTDOOR AIR CFM (OA-CFM) REQUIRED AS SHOWN IN THE AHU SCHEDULE.

A2

MIXED AIR CONTROL: THE MIXED AIR SENSOR (MA-T) SHALL PREVENT THE MIXED AIR TEMPERATURE FROM DROPPING BELOW 50F (ADJ).
RELIEF DAMPER CONTROL: SPACE STATIC PRESSURE SENSOR SHALL CONTROL THE RELIEF DAMPER AS REQUIRED TO MAINTAIN SLIGHTLY POSITIVE PRESSURE.

PREHEAT COIL CIRCULATING PUMP: THE PREHEAT COIL CIRCULATING PUMP (P1-C) SHALL RUN CONSTANTLY ANYTIME THE OUTSIDE AIR TEMPERATURE IS BELOW 35F. AN ALARM SHALL BE GENERATED IF THE STATUS DOES NOT MATCH THE COMMAND.
MORNING WARM-UP: A MORNING WARMUP CYCLE SHALL BE IMPLEMENTED, UPON TRANSITION FROM UNOCCUPIED TO OCCUPIED MODE. FANS TURN ON. OUTSIDE AIR DAMPER REMAINS CLOSED, RETURN AIR DAMPER REMAINS OPEN AND THE PREHEAT COIL VALVE SHALL MODULATE TO MAINTAIN A DISCHARGE OF 50F (ADJ). UNIT REMAINS IN THIS MODE UNTIL THE RETURN AIR TEMPERATURE (RA-T) REACHES THE MORNING WARMUP CYCLE TERMINATION SETPOINT OF 70F (ADJ). UPON REACHING THIS SETPOINT, THE AIR HANDLING UNIT ENTERS ITS NORMAL OCCUPIED MODE OF OPERATION (DISCHARGE TEMPERATURE CONTROL).

SAFETY: ALL OF THE SAFETY DEVICES ARE MANUAL RESET; THE DEVICES SHALL PREVENT THE AIR HANDLING UNIT FROM RUNNING. MANUAL RESET SHALL ALLOW THE AIR HANDLING UNIT TO RESTART. THE SUPPLY FAN WILL BE SHUTDOWN IF ANY OF THE FOLLOWING OCCUR:
-IF A TEMPERATURE LOW LIMIT (LT-ALM) SWITCH SENSES A TEMPERATURE BELOW 38F (ADJ). LOW LIMIT TO BE LOCATED ON THE DISCHARGE SIDE OF THE HEATING COIL.
-IF A FIRE ALARM (DA-SD, RA-SD) SHUTDOWN CONTACT IS PROVIDED.
-IF A HIGH OR LOW STATIC PRESSURE SWITCH (SF-HL, RA-LL) LOCATED AFTER THE SUPPLY FAN AND BEFORE THE RETURN FAN SENSES A DISCHARGE PRESSURE THAT IS GREATER THAN 5" W.C. (ADJ)

SHUTDOWN: WHEN THE UNIT IS SHUTDOWN BY EITHER A STOP COMMAND OR SYSTEM SAFETY THE UNIT WILL BE SET AS FOLLOWS:
SUPPLY FAN WILL BE OFF
OUTSIDE AIR DAMPER WILL CLOSE
RETURN AIR DAMPER WILL OPEN
CHILLED WATER VALVE SHALL CLOSE
PREHEAT VALVE SHALL MODULATE TO MAINTAIN A PREHEAT DISCHARGE TEMPERATURE (PH-T) OF 60F (ADJ)

BOTH HOT AND CHILLED WATER CONTROL VALVES SHALL BE 3 WAY.

POINTS LIST: THE POINTS LIST REPRESENTS THE MINIMUM POINTS TO BE PROVIDED AND DISPLAYED IN THE SYSTEM GRAPHICS. ADDITIONAL POINTS REQUIRED TO MEET THE SEQUENCE SHALL BE PROVIDED AND ALSO SHOWN.

	Hardware Points				Software Points						
Point Name	AI	AO	BI	BO	AV	BV	Loop	Sched	Trend	Alarm	Show On Graphic
Outside Air Temperature (OA-T)	x								x		x
Outside Air Humidity (OA-H)	x								x		x
Mixed Air Temperature (MA-T)	x								x		x
Outside Airflow (OA-CFM)	x								x	x	x
Return Air Humidity (RA-H)	x								x		x
Return Air Temperature (RA-T)	x								x		x
Supply Air Temperature (DA-T)	x								x		x
Preheat Discharge Air Temperature (PH-T)	x								x		x
Zone Static Pressure (ZN-SP)	x								x		x
Supply Airflow (SA-CFM)	x								x		x
Return Airflow (RA-CFM)	x								x		x
Discharge Air Static Pressure (DA-SP)	x								x		x
Cooling Valve (CC-VLV)		x							x		x
Preheat Valve (PH-VLV)		x							x		x
Reheat Valve (RH-VLV)		x							x		x
Outside Air Damper (OA-DPR)		x							x		x
Return Air Damper (RA-DPR)		x							x		x
Supply Fan VFD Speed (SFn-O)		x							x		x
Return Fan VFD Speed (RFn-O)		x							x		x
Relief Damper (RLF-DPR)		x							x		x
Freezestat (LT-ALM) QTY AS APPROPRIATE			x						x	x	x
Smoke Detector (RA-SD, DA-SD)			x						x	x	x
Supply Fan Status (SFn-S)			x						x		x
Return Fan Status (RFn-S)			x						x		x
Circulation Pump Status (P1-S)			x						x		x
Relief Damper End Switch (RLF-ES)			x						x		x
Filter Alarm (FILT-ALM)			x						x	x	x
High Static Pressure (DA-HL)			x						x	x	x
Low Static Pressure (RA-LL)			x						x	x	x
Supply Fan Start/Stop (SFn-C)				x					x		x
Return Fan Start/Stop (RFn-C)				x					x		x
Circulation Pump Start/Stop (P1-C)				x					x		x

	Hardware Points				Software Points						
Point Name	AI	AO	BI	BO	AV	BV	Loop	Sched	Trend	Alarm	Show On Graphic
Economizer Mixed Air Temp Setpoint					x				x		x
Outside Airflow Setpoint					x				x		x
Supply Air Temperature Setpoint					x				x		x
Emergency Shutdown						x			x	x	x
High Mixed Air Temperature						x				x	
High Return Air Humidity						x				x	
High Return Air Temperature						x				x	
High Return Airflow						x				x	
High Supply Air Temperature						x				x	
Low Mixed Air Temperature						x				x	
Low Return Air Temperature						x				x	
Low Supply Air Temperature						x				x	
Supply Fan Failure						x				x	
Supply Fan in Hand						x				x	
Supply Fan Runtime Exceeded						x				x	

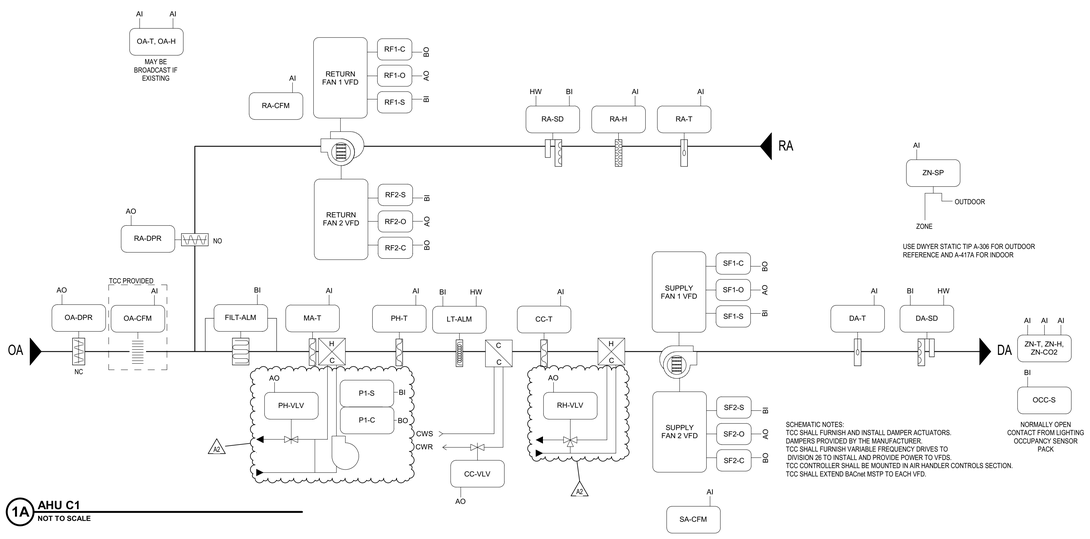

SCHEMATIC NOTES:
TCC SHALL FURNISH AND INSTALL DAMPER ACTUATORS.
DAMPERS PROVIDED BY THE MANUFACTURER.
TCC SHALL FURNISH VARIABLE FREQUENCY DRIVES TO DIVISION 26 TO INSTALL AND PROVIDE POWER TO VFDS.
TCC CONTROLLER SHALL BE MOUNTED IN AIR HANDLER CONTROLS SECTION.
TCC SHALL EXTEND BACnet MSTP TO EACH VFD.

1A AHU C1
NOT TO SCALE

AHU-C1 SEQUENCE OF OPERATION

SUPPLY FAN START/STOP: THE SUPPLY FAN (SFn-C) WILL BE STARTED ACCORDING TO THE SCHEDULE OR MANUALLY AS SELECTED BY THE OPERATOR. THE OCCUPANCY SENSOR USED FOR LIGHTING SHALL SETBACK/SETUP THE SETPOINTS BY 3F (ADJ) IF THE LIGHTING IS DISABLED DURING THE OCCUPANCY SCHEDULE. THE SAME SENSOR SHALL SETBACK/SETUP THE SETPOINTS BY 4F (ADJ) IF THE LIGHTING IS DISABLED DURING THE UNOCCUPIED SCHEDULE. A DIFFERENTIAL SHALL BE PROVIDED TO PREVENT THE AHU FROM CYCLING BETWEEN THIS MODE. IF THE SUPPLY FAN STATUS (SFn-S) DOES NOT MATCH THE COMMANDED VALUE, AN ALARM WILL BE GENERATED. WHEN THE SUPPLY FAN STATUS INDICATES THE FAN STARTED, THE CONTROL SEQUENCE WILL BE ENABLED. SUPPLY FAN SPEED (SFn-O) SHALL BE SET BY THE TEST AND BALANCE CONTRACTOR.

RETURN FAN START/STOP: WHEN THE SUPPLY FAN (SFn-C) IS STARTED, A START COMMAND TO THE RETURN FAN (RFn-C) WILL BE SENT. IF THE RETURN FAN STATUS (RFn-S) DOES NOT MATCH THE COMMANDED VALUE, AN ALARM WILL BE GENERATED.

OCCUPIED COOLING MODE: SUPPLY FAN SHALL START (SFn-C) AT FULL COOLING DEMAND WITH OUTDOOR AIR DAMPER OPEN AT MINIMUM POSITION (UNLESS ECONOMIZER IS ENABLED) AND FAN SPEED (SFn-O) AT 100%. DECREASES IN COOLING DEMAND SHALL DECREASE FAN SPEED FROM FULL SPEED DOWN TO MINIMUM SPEED (25% OF FULL SPEED). FURTHER DECREASES IN COOLING DEMAND SHALL BE WITH THE FAN SPEED AT MINIMUM AND THE COOLING CONTROL VALVE (CLG-VLV) POSITION MODULATING IN RESPONSE TO THE ZONE SETPOINT (ADJ). OCCUPIED COOLING SETPOINT SHALL BE 74F (ADJ) WITH OCCUPANCY. THE SETPOINT SHALL BE 76F (ADJ) WITHOUT OCCUPANCY.

UNOCCUPIED COOLING MODE: SUPPLY FAN SHALL START AT 60% SPEED WITH THE OUTSIDE AIR DAMPERS CLOSED (UNLESS ECONOMIZER IS ENABLED). DECREASES IN COOLING DEMAND SHALL DECREASE FAN SPEED FROM 60% DOWN TO MINIMUM SPEED (25% OF FULL SPEED). FURTHER DECREASES IN COOLING DEMAND SHALL BE WITH THE FAN SPEED AT MINIMUM AND THE CHILLED WATER CONTROL VALVE POSITION MODULATING IN RESPONSE TO THE ZONE SETPOINT. UNOCCUPIED COOLING SETPOINT SHALL BE 78F (ADJ).

OCCUPIED HEATING MODE: SUPPLY FAN SHALL START AT FULL HEATING DEMAND WITH OUTDOOR AIR DAMPER OPEN AT MINIMUM POSITION AND FAN AT 100% SPEED. DECREASES IN HEATING DEMAND SHALL BE WITH THE FAN AT 100% SPEED AND THE PREHEAT COIL (PH-VLV) MODULATING IN RESPONSE TO THE ZONE SETPOINT. DISCHARGE AIR TEMPERATURE SHALL NOT EXCEED 95F. OCCUPIED HEATING SETPOINT SHALL BE 70F (ADJ). THE SETPOINT SHALL BE 68F (ADJ) WITHOUT OCCPANCY.

UNOCCUPIED HEATING MODE: SUPPLY FAN SHALL START AT 60% SPEED WITH THE OUTSIDE AIR DAMPERS CLOSED. DECREASES IN HEATING DEMAND SHALL BE WITH THE FAN SPEED AT 60% AND THE PREHEAT COIL MODULATING IN THE SAME MANNER AS IN OCCUPIED HEATING MODE. UNOCCUPIED HEATING SETPOINT SHALL BE 66F (ADJ).

ZONE HUMIDITY CONTROL: IF THE ZONE HUMIDITY (ZN-H) RISES ABOVE SETPOINT, THE SUPPLY FAN SPEED SHALL SET TO 50% OF THE MAXIMUM SPEED AS ESTABLISHED BY THE TEST AND BALANCE CONTRACTOR. THE COOLING VALVE SHALL MODULATE OPEN TO MAINTAIN A COOLING COIL DISCHARGE TEMPERATURE (CC-T) OF 53F AND THE REHEAT VALVE (RH-VLV) WILL MODULATE TO MAINTAIN THE ZONE TEMPERATURE. A DIFFERENTIAL SHALL BE PROVIDED TO PREVENT THE UNIT FROM CYCLING BETWEEN THIS MODE.

ENTHALPY SWITCHOVER: WHEN THE SHARED OUTSIDE AIR ENTHALPY (OA-T, OA-H) IS BELOW THE RETURN AIR ENTHALPY (RA-T, RA-H), THE ECONOMIZER WILL BE ENABLED. WHEN THE SHARED OUTSIDE AIR ENTHALPY RISES ABOVE THE RETURN AIR ENTHALPY, THE ECONOMIZER WILL BE DISABLED.

ZONE CARBON DIOXIDE CONTROL: WHEN THE ZONE CARBON DIOXIDE LEVEL (ZN-CO2) EXCEEDS THE SETPOINT OF 1000PPM, THE MIXED AIR DAMPERS SHALL BRING IN MORE OUTSIDE AIR SUBJECT TO A MIXED AIR TEMPERATURE (MA-T) LOW LIMIT OF 53F. OUTSIDE AIR DAMPER SHALL BE CAPABLE OF CLOSING IF CO2 LEVELS ARE BELOW 900PPM. A DIFFERENTIAL SHALL BE PUT IN PLACE TO PREVENT CYCLING OF DAMPERS IN THIS MODE.

A2

PREHEAT COIL CIRCULATING PUMP: THE PREHEAT COIL CIRCULATING PUMP (P1-C) SHALL RUN CONSTANTLY ANYTIME THE OUTSIDE AIR TEMPERATURE IS BELOW 35F. AN ALARM SHALL BE GENERATED IF THE STATUS DOES NOT MATCH THE COMMAND.
MORNING WARM-UP: A MORNING WARMUP CYCLE SHALL BE IMPLEMENTED, UPON TRANSITION FROM UNOCCUPIED TO OCCUPIED MODE. FANS TURN ON. OUTSIDE AND EXHAUST AIR DAMPERS REMAIN CLOSED, RETURN AIR DAMPER REMAINS OPEN, PREHEAT VALVE IS DRIVEN FULLY OPEN SUBJECT TO A HIGH LIMIT DISCHARGE OF 90F (ADJ) AND COOLING VALVE IS FULLY CLOSED. UNIT REMAINS IN THIS MODE UNTIL THE RETURN AIR TEMPERATURE (RA-T) REACHES THE MORNING WARMUP CYCLE TERMINATION SETPOINT OF 70F (ADJ). UPON REACHING THIS SETPOINT, THE AIR HANDLING UNIT ENTERS ITS NORMAL OCCUPIED MODE OF OPERATION (ZONE TEMPERATURE CONTROL).

SAFETY: ALL OF THE SAFETY DEVICES ARE MANUAL RESET; THE DEVICE THAT HAS TRIPPED MUST BE MANUALLY RESET BEFORE RESTARTING THE AIR HANDLING UNIT.
IF A FIRE ALARM (DA-SD, RA-SD) SHUTDOWN CONTACT IS PROVIDED, THE SUPPLY FAN AND RETURN FAN WILL BE SHUTDOWN WHEN TRIGGERED.

SHUTDOWN: WHEN THE UNIT IS SHUTDOWN BY EITHER A STOP COMMAND OR SYSTEM SAFETY THE UNIT WILL BE SET AS FOLLOWS:
SUPPLY AND RETURN FAN SHALL BE OFF
OUTSIDE AND EXHAUST AIR DAMPER SHALL CLOSE
RETURN AIR DAMPER SHALL OPEN
COOLING AND REHEAT VALVE SHALL CLOSE
PREHEAT VALVE SHALL MODULATE TO MAINTAIN A PREHEAT DISCHARGE TEMPERATURE (PH-T) OF 60F (ADJ)

POINTS LIST: THE POINTS LIST REPRESENTS THE MINIMUM POINTS TO BE PROVIDED AND DISPLAYED IN THE SYSTEM GRAPHICS. ADDITIONAL POINTS REQUIRED TO MEET THE SEQUENCE SHALL BE PROVIDED AND ALSO SHOWN.

	Hardware Points				Software Points						
Point Name	AI	AO	BI	BO	AV	BV	Loop	Sched	Trend	Alarm	Show On Graphic
Outside Air Temperature (OA-T)	x								x		x
Outside Air Humidity (OA-H)	x								x		x
Mixed Air Temperature (MA-T)	x								x		x
Outside Airflow (OA-CFM)	x								x	x	x
Return Air Humidity (RA-H)	x								x		x
Return Air Temperature (RA-T)	x								x		x
Supply Air Temperature (DA-T)	x								x		x
Preheat Discharge Air Temperature (PH-T)	x								x		x
Zone Static Pressure (ZN-SP)	x								x		x
Zone Space Temperature (ZN-T)	x								x		x
Zone Space Humidity (ZN-H)	x								x		x
Zone Space Carbon Dioxide Level (ZN-CO2)	x								x		x
Supply Airflow (SA-CFM)	x								x		x
Return Airflow (RA-CFM)	x								x		x
Cooling Valve (CC-VLV)		x							x		x
Preheat Valve (PH-VLV)		x							x		x
Reheat Valve (RH-VLV)		x							x		x
Outside Air Damper (OA-DPR)		x							x		x
Return Air Damper (RA-DPR)		x							x		x
Supply Fan VFD Speed (SFn-O) QTY 2		x							x		x
~~Return Fan VFD Speed (RFn-O) QTY 2~~	~~x~~	~~x~~							~~x~~		~~x~~
Circulation Pump Status (P1-S)			x						x		x
~~Freezestat (LT-ALM) QTY AS APPROPRIATE~~			~~x~~						~~x~~	~~x~~	~~x~~
Smoke Detector (RA-SD, DA-SD)			x						x	x	x
Supply Fan Status (SFn-S) QTY 2			x						x		x
Return Fan Status (RFn-S) QTY 2			x						x		x
Filter Alarm (FILT-ALM)			x						x	x	x
Occupancy Status (OCC-S)			x						x		x
Supply Fan Start/Stop (SFn-C) QTY 2				x					x		x
~~Return Fan Start/Stop (RFn-C) QTY 2~~				~~x~~					~~x~~		~~x~~
Circulation Pump Start/Stop (P1-C)				x					x		x

	Hardware Points				Software Points						
Point Name	AI	AO	BI	BO	AV	BV	Loop	Sched	Trend	Alarm	Show On Graphic
Economizer Mixed Air Temp Setpoint					x				x		x
Outside Airflow Setpoint					x				x		x
Supply Air Temperature Setpoint					x				x		x
Emergency Shutdown						x			x	x	x
High Mixed Air Temperature						x				x	
High Return Air Humidity						x				x	
High Return Air Temperature						x				x	
High Return Airflow						x				x	
High Supply Air Temperature						x				x	
Low Mixed Air Temperature						x				x	
Low Return Air Temperature						x				x	
Low Supply Air Temperature						x				x	
Supply Fan Failure						x				x	
Supply Fan in Hand						x				x	
Supply Fan Runtime Exceeded						x				x	

SCHMIDT ASSOCIATES
415 Massachusetts Avenue
Indianapolis, IN 46204
www.schmidt-arch.com

Project No. 2018-050.LNH
Project Date 07.06.2020
Produced DLM

SARAH KATHLEEN HEMPSTEAD REGISTERED No. AR10400134 STATE OF INDIANA ARCHITECT

These Drawings and Specifications, and all copies thereof are and shall remain the property and copyright of the Architect. They shall be used only with respect to this Project and are not to be used on any other Project or Work without prior written permission from the Architect.

#	Revision	Date
A2	ADDENDUM #2	07.23.2020

7802 Hague Road
Indianapolis, IN 46256

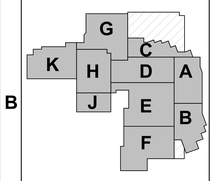

KEY PLAN

N

MSD OF LAWRENCE TOWNSHIP

ADDITIONS AND RENOVATIONS TO LAWRENCE NORTH HIGH SCHOOL

TEMPERATURE CONTROLS SCHEMATICS

M-705

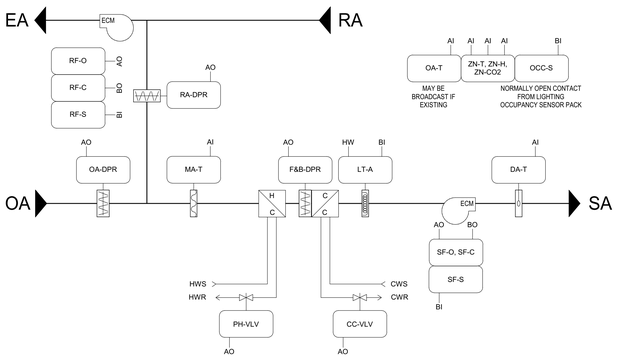

4-PIPE UNIT VENTILATOR (UNIT A, B, & C) WITH FACE & BYPASS DAMPER
1A NOT TO SCALE

UNIT VENT SEQUENCE OF OPERATION

TCC CONTROLLER AND DEVICES SHALL BE FURNISHED BY TCC TO UNIT VENTILATOR MANUFACTURER FOR FACTORY INSTALLATION AND WIRING. CONTROL VALVES FURNISHED BY TCC, INSTALLED BY THE DIV. 23 CONTRACTOR. SCHEDULED MECHANICAL AIRFLOWS HAVE BEEN UPSIZED TO ALLOW FOR HIGHER AIRFLOW FOR DEHUMIDIFICATION AND CO2 EVENTS. THE OUTSIDE AIR WILL FULLY OPEN AND FAN SPEED SHALL STAGE TO MAXIMUM CFM DURING HIGH CO2 TIME PERIODS PER THE MECHANICAL SCHEDULES. DURING HIGH OUTSIDE AIR TEMPERATURES, THE CHILLED WATER VALVE WILL FULLY OPEN AND THE FACE & BYPASS DAMPER WILL MODULATE AS NEEDED. THE VUV WILL RETURN TO NORMAL OPERATING CFM AFTER VENTILATION RATE HAS BEEN MET.

OCCUPIED CYCLE: THE UNIT RUNS (SF-C, RF-C) BASED UPON AN OWNER-DEFINED TIME OF DAY SCHEDULE OR MANUALLY AS SELECTED BY THE OPERATOR. UNIT VENTS WILL REVERT TO OCCUPIED MODE IF THE OCCUPANCY SENSOR (OCC-S) UTILIZED FOR LIGHTING IS ENABLED AFTER THE NORMAL OCCUPANCY SCHEDULE FOR AN ADJUSTABLE TIME LONG ENOUGH TO PREVENT SHORT CYCLING. IF THE SUPPLY FAN STATUS (SF-S) OR RELIEF FAN STATUS (RF-S) DOES NOT MATCH THE COMMANDED VALUE, AN ALARM WILL BE GENERATED. WHEN THE FAN STATUS INDICATES THE FAN IS STARTED, THE CONTROL SEQUENCE WILL BE ENABLED.

OCCUPIED COOLING MODE: SUPPLY FAN SHALL START AT FULL COOLING DEMAND WITH OUTDOOR AIR DAMPER CLOSED (UNLESS ECONOMIZER IS ENABLED) AND SUPPLY FAN (SF-O) AT 100% SPEED. DECREASES IN COOLING DEMAND SHALL DECREASE FAN SPEED FROM FULL SPEED DOWN TO MINIMUM SPEED (25% OF FULL SPEED). FURTHER DECREASES IN COOLING DEMAND SHALL BE WITH THE FAN SPEED AT MINIMUM AND THE COOLING CONTROL VALVE (VLG-VLV) POSITION MODULATING IN RESPONSE TO THE ZONE SETPOINT (ZN-T). OCCUPIED COOLING SETPOINT SHALL BE 74F (ADJ). THE FACE AND BYPASS DAMPER (F&B-DPR) SHALL BYPASS THE COIL WHEN NOT IN COOLING MODE.

UNOCCUPIED COOLING MODE: SUPPLY FAN SHALL START AT 60% SPEED WITH THE OUTSIDE AIR DAMPER CLOSED (UNLESS ECONOMIZER IS ENABLED) WHEN THE ZONE TEMPERATURE EXEEDS THE UNOCCUPIED COOLING SETPOINT OF 78F (ADJ). DECREASES IN COOLING DEMAND SHALL DECREASE FAN SPEED FROM 60% DOWN TO MINIMUM SPEED (25% OF FULL SPEED). FURTHER DECREASES IN COOLING DEMAND SHALL BE WITH THE FAN SPEED AT MINIMUM AND THE CHILLED WATER CONTROL VALVE POSITION MODULATING IN RESPONSE TO THE ZONE SETPOINT.

OCCUPIED HEATING MODE: SUPPLY FAN SHALL START AT FULL HEATING DEMAND WITH OUTDOOR AIR DAMPER CLOSED AND FAN AT 100% SPEED. DECREASES IN HEATING DEMAND SHALL BE WITH THE FAN AT 100% SPEED AND THE PREHEAT COIL (PH-VLV) MODULATING IN RESPONSE TO THE ZONE SETPOINT. DISCHARGE AIR TEMPERATURE SHALL NOT EXCEED 95F. OCCUPIED HEATING SETPOINT SHALL BE 70F (ADJ).

UNOCCUPIED HEATING MODE: SUPPLY FAN SHALL START AT 60% SPEED WITH THE OUTSIDE AIR DAMPERS CLOSED WHEN THE ZONE TEMPERATURE DROPS BELOW THE UNOCCUPIED HEATING SETPOINT OF 64F (ADJ). DECREASES IN HEATING DEMAND SHALL BE WITH THE FAN SPEED AT 60% AND THE REHEAT COIL MODULATING IN THE SAME MANNER AS IN OCCUPIED HEATING MODE.

RELIEF FAN TRACKING: THE RELIEF FAN SHALL MODULATE SPEED (RF-O) IN CONJUNCTION WITH THE OUTSIDE AIR DAMPER. THE RELIEF FAN SHALL INCREASE SPEED AS THE OUTDOOR AIR DAMPER MODULATES OPEN. THE TEST AND BALANCE CONTRACTOR SHALL PROVIDE THE OUTDOOR AIR DAMPER POSITION THAT SHALL ENABLE THE RELIEF FAN AT MINIMUM SPEED TO CREATE A SLIGHTLY POSITIVE ZONE PRESSURE OF +0.05" W.C.

ZONE HUMIDITY CONTROL: IF THE ZONE HUMIDITY (ZN-H) RISES ABOVE SETPOINT, THE SUPPLY FAN SPEED SHALL BE SET TO THE MAXIMUM SPEED AS ESTABLISHED BY THE TEST AND BALANCE CONTRACTOR, THE COOLING VALVE SHALL FULLY OPEN AND FACE AND BYPASS DAMPERS (F&B-DPR) SHALL MODULATE TO MAINTAIN THE ZONE TEMPERATURE. A DIFFERENTIAL SHALL BE PROVIDED TO PREVENT THE UNIT FROM CYCLING BETWEEN THIS MODE.

ENTHALPY SWITCHOVER: WHEN THE SHARED OUTSIDE AIR ENTHALPY (OA-T, OA-H) IS BELOW THE ZONE ENTHALPY (ZN-T, ZN-H), THE ECONOMIZER SHALL BE ENABLED. WHEN THE SHARED OUTSIDE AIR ENTHALPY RISES ABOVE THE RETURN AIR ENTHALPY, THE ECONOMIZER WILL BE DISABLED.

ZONE CARBON DIOXIDE CONTROL: WHEN THE ZONE CARBON DIOXIDE LEVEL (ZN-CO2) EXCEEDS THE SETPOINT OF 1000PPM, THE MIXED AIR DAMPERS SHALL BRING IN MORE OUTSIDE AIR SUBJECT TO A MIXED AIR TEMPERATURE (MA-T) LOW LIMIT OF 53F (ADJ) AND A HIGH LIMIT OF 80F (ADJ). OUTSIDE AIR DAMPER SHALL BE CAPABLE OF CLOSING IF CO2 LEVELS ARE BELOW 900PPM. A DIFFERENTIAL SHALL BE PUT IN PLACE TO PREVENT CYCLING OF DAMPERS IN THIS MODE.

MORNING WARM-UP CONTROL: THIS SYSTEM CAN BE USED FOR MORNING WARM-UP IF REQUIRED. THIS CYCLE SHALL BE SELECTABLE FROM AN ON/OFF BUTTON ON THE SYSTEM GRAPHICS. IF SELECTED "ON", THE FOLLOWING SEQUENCE SHALL BE ENABLED. IF THE OUTSIDE AIR TEMPERATURE IS BELOW 40F (ADJ), THE UNIT WILL START BASED ON ITS TIME OF DAY SCHEDULE. THE UNIT SHALL RUN IN A FULLY RECIRCULATED MODE. SUPPLY FAN SHALL BE OFF. WHEN SUPPLY FAN RUN STATUS IS ESTABLISHED, THE UNIT SHALL GO INTO A HEATING MODE AND THE (DA-T) SHALL BE LIMITED TO A MAXIMUM OF 90F (ADJ).

SAFETIES: IF A TEMPERATURE LOW LIMIT SWITCH (LT-ALM) SENSES A TEMPERATURE BELOW 35F, THE SUPPLY FAN WILL BE SHUTDOWN VIA A HARDWIRE INTERLOCK. LOW LIMIT SHALL BE AUTO RESET. SOFTWARE SHALL LOCKOUT OPERATION UPON THIRD TRIP WITHIN A TWENTY FOUR HOUR PERIOD. MANUAL RESET BY GRAPHICS OR LOCALLY BY POWER CYCLING SHALL BE REQUIRED TO RESTART THE UNIT. THE OUTSIDE AIR DAMPER SHALL SPRING RETURN SHUT AND BOTH FANS SHALL BE OFF. BOTH CONTROL VALVES SHALL SPRING OPEN.

POINTS LIST: THE POINTS LIST REPRESENTS THE MINIMUM POINTS TO BE PROVIDED AND DISPLAYED IN THE SYSTEM GRAPHICS. ADDITIONAL POINTS REQUIRED TO MEET THE SEQUENCE SHALL BE PROVIDED AND ALSO SHOWN.

	Hardware Points				Software Points						
Point Name	AI	AO	BI	BO	AV	BV	Loop	Sched	Trend	Alarm	Show On Graphic
Outside Air Temperature (OA-T)(May Be Broadcast)	x								x		x
Discharge Air Temperature (DA-T)	x								x		x
Mixed Air Temperature (MA-T)	x								x		x
Space Temperature (ZN-T)	x								x		x
Space Humidity (ZN-H)	x								x		x
Space Carbon Dioxide Level (ZN-CO2)	x								x		x
Outside Air Damper (OA-DPR)		x							x		x
Return Air Damper (RA-DPR)		x							x		x
Face and Bypass Damper (F&B-DPR)		x							x		x
Supply Fan Speed (SF-O)		x							x		x
Relief Fan Speed (RF-O)		x							x		x
Preheat Valve (PH-VLV)		x							x		x
Cooling Valve (CC-VLV)		x							x		x
Supply Fan Status (SF-S)			x						x		x
Relief Fan Status (RF-S)			x						x		x
Low Limit (LT-A)			x						x	x	x
Occupancy Status (OCC-S)			x						x		x
Supply Fan Start/Stop (SF-C)				x					x		x
Relief Fan Start/Stop (RF-C)				x					x		x

	Hardware Points				Software Points						
Point Name	AI	AO	BI	BO	AV	BV	Loop	Sched	Trend	Alarm	Show On Graphic
Fan Failure						x			x	x	
Low Discharge Air Temperature (<45F)						x			x	x	
High Discharge Air Temperature (>120F)						x			x	x	
Zone Needs Heating (< stpt - 2)						x					
Zone Needs Cooling (> stpt + 2)						x					
Occupied Override (run for 1 hour)						x			x		x
Hot Water Available						x			x		x
Chilled Water Available						x			x		x
Minimum Mixed Air Damper Position					x						x
Outside Air Deadband					x						
Economizer Temperature Setpoint					x						x
Minimum Discharge Air Temperature					x						
Occupied								x	x		x

SCHMIDT ASSOCIATES
415 Massachusetts Avenue
Indianapolis, IN 46204
www.schmidt-arch.com

Project No. 2018-050.LNH
Project Date 07.06.2020
Produced DLM

SARAH KATHLEEN HEMPSTEAD REGISTERED No. AR10400134 STATE OF INDIANA ARCHITECT

These Drawings and Specifications, and all copies thereof are and shall remain the property and copyright of the Architect. They shall be used only with respect to this Project and are not to be used on any other Project or Work without prior written permission from the Architect.

#	Revision	Date
A2	ADDENDUM #2	07.23.2020

7802 Hague Road
Indianapolis, IN 46256

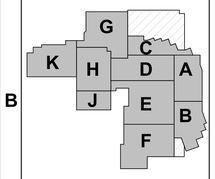

KEY PLAN

N

MSD OF LAWRENCE TOWNSHIP

ADDITIONS AND RENOVATIONS TO LAWRENCE NORTH HIGH SCHOOL

TEMPERATURE CONTROLS SCHEMATICS

M-706

SITE PLAN NOTES

#	NOTES
1	EXISTING IP&L OVERHEAD PRIMARY UTILITY LINES AND POLES.
2	EXISTING IP&L POLE-MOUNTED ELECTRICAL METERS.
3	EXISTING UNDERGROUND PRIMARY.
4	EXISTING PAD-MOUNT TRANSFORMER TO REMAIN.
5	EXISTING MANHOLE TO REMAIN.
6	RELOCATED UNDERGROUND PRIMARY. INSTALL (2) 4" SCHEDULE 40 PVC CONDUITS BETWEEN MANHOLES.
7	~~EXISTING 480Y/277V, 75 KW, 3Ø, 4W GENERATOR TO REMAIN.~~
8	INSTALL (1) 4" UNDERGROUND PVC CONDUIT FROM NEW UTILITY PROVIDED HANDHOLE TO NEW PAD MOUNTED TRANSFORMER. COORDINATE ALL REQUIREMENTS WITH IP&L.
9	~~NEW IP&L PAD-MOUNT TRANSFORMER. PROVIDE TRANSFORMER PAD PER IP&L STANDARDS.~~
10	UNDERGROUND SECONDARY CONDUCTORS IN 6 CELL CONCRETE ENCASED DUCT BANK. REFER TO ELECTRICAL DETAILS FOR ADDITIONAL INFORMATION.
11	GROUNDING TRIANGLE. REFER TO GROUNDING SCHEMATIC.
12	NEW 480Y/277V, 200 KW, 3Ø, 4W GENERATOR.
13	1" UNDERGROUND SCHEDULE 40 PVC CONDUIT FOR SITE SIGNAGE POWER. CONNECT TO 120/208V CIRCUIT 12B1-(24,26). PROVIDE NEUTRAL. INSTALL F30 WIRE.

SITE PLAN NOTES

#	NOTES
14	1" UNDERGROUND SCHEDULE 40 PVC CONDUIT FOR SITE SIGNAGE TELECOMMUNICATIONS. ROUTE CONDUIT TO IDF BM114 AND STUB UP 2" A.F.F.
15	1-1/2" UNDERGROUND CONDUIT FOR BAND TOWER POWER. TRANSITION UNDERGROUND SCHEDULE 40 PVC CONDUIT TO RGS AND ROUTE TO 2-GANG WEATHERPROOF OUTLET BOX LOCATED AT +18" ABOVE TOP OF BAND PLATFORM TO CENTERLINE. CONFIRM FINAL OUTLET BOX LOCATION IN FIELD WITH OWNER PRIOR TO INSTALLATION. CONNECT TO 120/208V CIRCUIT 12F5-(22,24). PROVIDE NEUTRAL.
16	1-1/2" UNDERGROUND CONDUIT FOR BAND TOWER TELECOMMUNICATIONS. TRANSITION UNDERGROUND SCHEDULE 40 PVC CONDUIT TO RGS AND ROUTE TO 2-GANG WEATHERPROOF JUNCTION BOX LOCATED AT +18" ABOVE TOP OF BAND TOWER PLATFORM TO CENTERLINE. CONFIRM FINAL J-BOX LOCATION WITH OWNER IN FIELD PRIOR TO INSTALLATION. ROUTE CONDUIT TO IDF EM102 AND STUB UP 2" A.F.F. PROVIDE SWEEP BENDS AND MAINTENANCE HOLES PER CURRENT BICSI OSP STANDARDS.
17	TRANSITION POWER AND DATA CONDUITS FROM PVC TO RGS UP EXISTING EXTERIOR WALL TO SEPARATE WEATHERPROOF PULL BOXES FOR POWER AND TELECOMMUNICATIONS LOCATED AT CLASSROOM CONCEALED ACCESSIBLE CEILING SPACE FOR PENETRATION INTO BUILDING. PROVIDE SLEEVE SEAL SYSTEM AT WALL PENETRATION. REFER TO DETAILS.
18	INSTALL (1) 1" PVC CONDUIT FOR FIRE ALARM CONNECTION TO PIV. LOCATE MONITORING MODULE IN UNIT B, ROOM BM120A, ELEC. INSTALL WIRING FROM MODULE TO PIV.

SITE PLAN NOTES

#	NOTES
19	INSTALL (1) 1" PVC CONDUIT FOR FIRE ALARM CONNECTION TO PIV. LOCATE MONITORING MODULE IN UNIT K, ROOM MM108, ELEC. INSTALL WIRING FROM MODULE TO PIV.
20	PROVIDE NEW POLE LIGHT FIXTURE ON NEW +6" A.F.G. FOUNDATION. REFER TO DETAIL SHEET E-502.
21	PROVIDE NEW POLE LIGHT FIXTURE ON NEW +42" A.F.G. FOUNDATION. REFER TO DETAIL SHEET E-502.
22	IN GROUND FLAG POLE LIGHT FIXTURES. REFER TO LIGHT FIXTURE SCHEDULE AND DETAIL SHEET E-502. (TYPICAL OF 5 LIGHT FIXTURES)
23	CONTROL LIGHTING CIRCUIT FROM LIGHTING CONTACTOR LC-J1.
24	CONTROL LIGHTING CIRCUIT FROM LIGHTING CONTACTOR LC-F1.
25	CONTROL LIGHTING CIRCUIT FROM LIGHTING CONTACTOR LC-H1.
26	PROVIDE 20A-2P CIRCUIT BREAKER IN EXISTING PANEL AND CONNECT COMPLETE. REMOVE/ADJUST CIRCUIT BREAKERS IN EXISTING PANEL AS REQUIRED.
27	~~CONTROL LIGHTING CIRCUIT FROM LIGHTING CONTACTOR LC-D1.~~
28	CONTROL LIGHTING CIRCUIT FROM LIGHTING CONTACTOR LC-D2.
29	~~STANCHION MOUNTED MEMORIAL FLAG POLE LIGHT FIXTURES. REFER TO LIGHT FIXTURE SCHEDULE AND DETAIL SHEET E-502.~~
30	NEW HANDHOLES FURNISHED AND INSTALLED BY IPL.
31	INSTALL (1) 4" UNDERGROUND PVC CONDUIT FROM NEW PAD MOUNTED TRANSFORMER TO SECOND UTILITY PROVIDED HANDHOLE. COORDINATE ALL REQUIREMENTS WITH IP&L.

GENERAL SITE NOTES

#	NOTES
A	REFER TO SHEET E-001 FOR ADDITIONAL INFORMATION.
B	REFER TO C-SERIES DRAWINGS FOR COORDINATION WITH OTHER UTILITIES.
C	COORDINATE ALL PHASING WITH CONSTRUCTION MANAGER.
D	INCLUDE IN BID ALL FEES, LABOR, MATERIAL, ETC. REQUIRED FOR THE REMOVAL AND MODIFICATION OF EXISTING SERVICES, AND INSTALLATION OF SERVICE TO THE NEW BUILDING. CONTACT INDIANAPOLIS POWER & LIGHT, MS. KATIE FORD AT katherine.ford@aes.com OR 317-261-5267, FOR ADDITIONAL INFORMATION.
E	REFER TO IPL "GOLD BOOK" FOR DETAILS AND REQUIREMENTS, INCLUDING, BUT NOT LIMITED TO, SERVICE REQUIREMENTS FOR UNDERGROUND PRIMARY, PROTECTIVE POLES FOR PAD-MOUNTED EQUIPMENT, UTILITY TRANSFORMER CONCRETE PAD DETAIL, ETC.

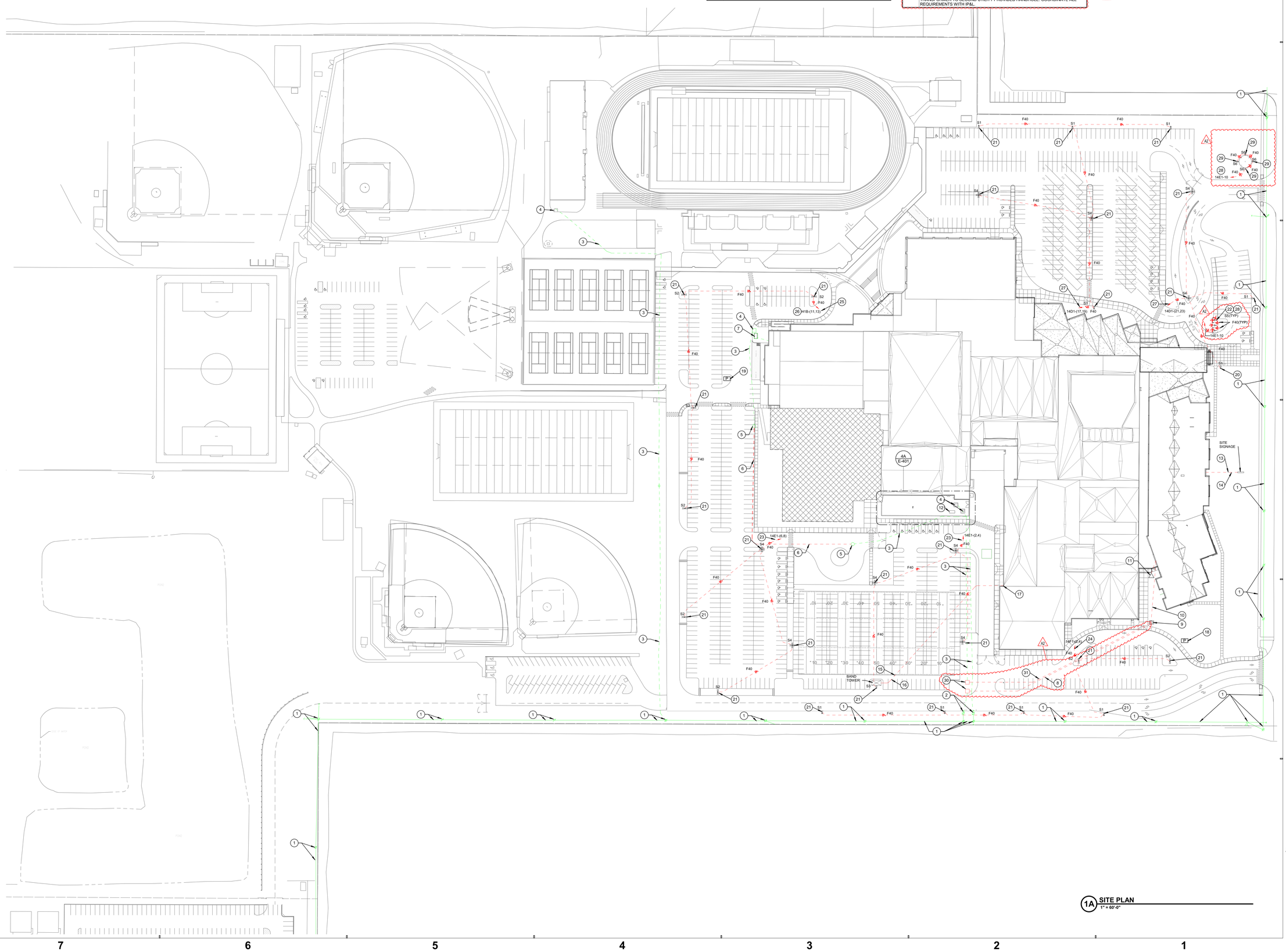

1A SITE PLAN
1" = 60'-0"

SCHMIDT ASSOCIATES
415 Massachusetts Avenue
Indianapolis, IN 46204
www.schmidt-arch.com

Project No. 2018-050.LNH
Project Date 07.06.2020
Produced GWL/JAR

SARAH KATHLEEN HEMPSTEAD REGISTERED NO. AR10400134 STATE OF INDIANA ARCHITECT

These Drawings and Specifications, and all copies thereof are and shall remain the property and copyright of the Architect. They shall be used only with respect to this Project and are not to be used on any other Project or Work without prior written permission from the Architect.

#	Revision	Date
A2	ADDENDUM #2	07.23.2020

7802 Hague Road
Indianapolis, IN 46256

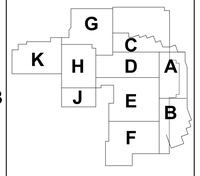

KEY PLAN

MSD OF LAWRENCE TOWNSHIP

ADDITIONS AND RENOVATIONS TO LAWRENCE NORTH HIGH SCHOOL

SITE PLAN

ES102