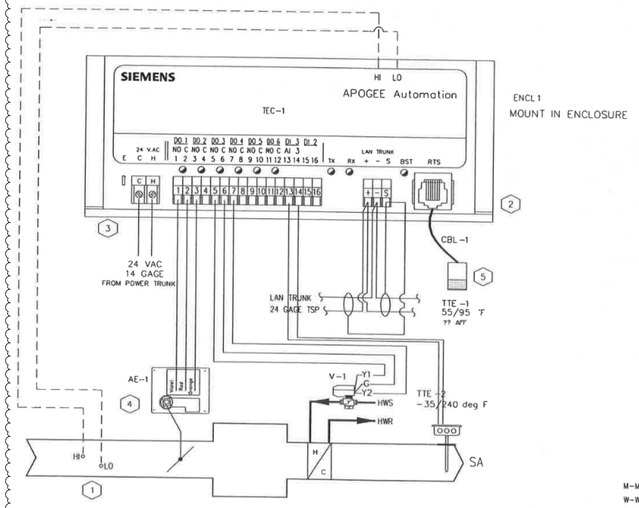

INSTALLATION NOTES:

1. VAV BOX INSTALLED WITH 3 TO 5 STRAIGHT DUCT DIAMETERS UPSTREAM OF BOX TO PROVIDE PROPER FLOW SENSING
2. TEC-1 TO BE MOUNTED IN SUPPLIED CONTROLLER ENCLOSURE
3. POWER FROM TRANSFORMER MOUNTED BY SIEMENS LOCATE ON FAN POWERED BOX. 95 VA TRANSFORMERS CAN POWER 8 BOXES, 40 VA (2) BOXES POWER TO VAV BOXES FROM THESE SOURCES
4. MOUNT ACTUATOR WITH DAMPER IN FULL OPEN POSTION. VERIFY TEC-1 AND ACTUATOR REQUIREMENT WITH THE BOX MANUFACTURER
5. REPLACE EXISTING PNEUMATIC THERMOSTAT WITH ELECTRONIC

CONTROL SCHEDULE

ROOM TEMPERATURE	°F (-°C)	HEATING SET POINT	COOLING SET POINT	°F (+°C)
VALVE OPEN MAXIMUM AIR				
SUPPLY AIR				
REHEAT COIL VALVE				
MINIMUM AIR				
VALVE CLOSED				

DEVICE	SIEMENS FITTER	SIEMENS ELEC.	MANUFACTURER	DIVISION 16	DIVISION 15
TTE-1		M,W			
AE-1			M,W		
TEC-1			M,W,P		
V-1		W			M
LAN TRUNK		W			
POWER (24VAC)		W			

M-MOUNTED
W-WIRED
P-PIPED

01A VAV WITH REHEAT COIL (#2023)

INSTALLATION NOTES:

1. VAV BOX INSTALLED WITH 3 TO 5 STRAIGHT DUCT DIAMETERS UPSTREAM OF BOX TO PROVIDE PROPER FLOW SENSING
2. TEC-1 TO BE MOUNTED IN SIEMENS SUPPLIED CONTROLLER ENCLOSURE
3. MOUNT TRANSFORMER WHERE REQUIRED 120 VOLT FROM FBVAV BOX TRANSFOMER 50 VA TO HANDLE (4) VAV BOXES TRANSFORMER 95 VA TO HANDLE (8) TEC'S LOCATE AS REQUIRED
4. MOUNT ACTUATOR WITH DAMPER IN FULL OPEN POSITION. VERIFY TEC-1 AND ACTUATOR REQUIREMENT WITH THE BOX MANUFACTURER
5. REPLACE EXISTING ROOM PNEUMATIC THERMOSTAT WITH ELECTRONIC

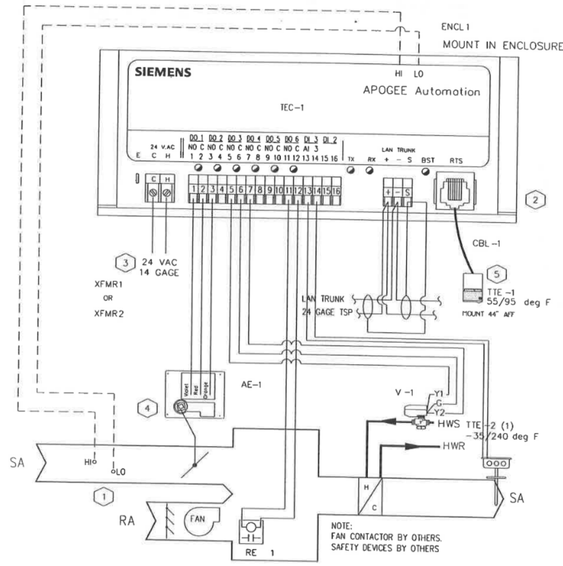

CONTROL SCHEDULE

ROOM TEMPERATURE	°F (-°C)	HEATING SET POINT	COOLING SET POINT	°F (+°C)
VALVE OPEN MAXIMUM AIR				
SUPPLY AIR				
REHEAT COIL VALVE				
MINIMUM AIR				
VALVE CLOSED				
FAN OPERATION OCCUPIED	ON		OFF	
FAN OPERATION UNOCCUPIED	ON		OFF	

DEVICE	SIEMENS FITTER	SIEMENS ELEC.	MANUFACTURER	DIVISION 16	DIVISION 15
TTE-1		M,W			
AE-1			M,W		
TEC-1			M,W,P		
V-1		W			M
LAN TRUNK		W			
POWER (24VAC)		W			

M-MOUNTED
W-WIRED
P-PIPED

02A VAV WITH REHEAT COIL (#2027)

EXISTING CONTROL SCHEMATICS - TCC SHALL REFERENCE EXISTING SIEMENS DRAWINGS AS MINIMUM RETROFIT REQUIREMENTS - PNEUMATIC TO DDC RETROFIT REQUIRED WHERE APPLICABLE - SEE MECHANICAL DRAWINGS FOR EQUIPMENT REFERENCES

Control Device		Qty	Product Number	Manufacturer	SD Number	Document Number	Description
Field Mounted Devices							
AE	1	1	GDE131.1P	SIEMENS		154 011	ACT NSR PLENUM 24/10BL 5Nm
CBL	1	1	588-100B	SIEMENS		149 957	6-WIRE 2-RJ11 RS CABLE 50TPLMN
ENCL	1	1	550-002	SIEMENS			ENCLOSURE ASSY,TEC
TEC	1	1	540-100	SIEMENS	5600-15	149 171	TERM BOX CTLR ELEC OUT
TTE	1	1	540-660A	SIEMENS		149 312	TEC RM SNSR-BEIGE
TTE	2	1	536-811	SIEMENS	5600-60	149 134	100K OHM DUCT TEMP SENSOR
V							SEE VALVE SUBMITTAL

The variable volume (VAV) terminal unit is controlled independent of system pressure fluctuations by an application specific DDC controller using electric actuation. The space served by the VAV terminal unit is controlled in Occupied and Unoccupied modes as follows:

Occupied
The VAV terminal unit is controlled within user defined maximum and minimum supply air volume settings. The controller monitors the room temperature sensor and air velocity sensor and modulates the supply air damper in sequence with the reheat valve to maintain the room temperature at set point. Supply air volume remains at minimum when HW reheat valve is modulated.

Unoccupied
The terminal unit is controlled using the night set point. The controller may reset to the Occupied mode for a predetermined time period upon a signal from the control system or manually at the room sensor.

2007-2008 RETROFIT

Existing VAV Boxes not currently on the Siemens DDC Apogee System with existing pneumatic control, control valve and damper actuation,

a. **Completely document the current Box CFM setting for different modes of operation prior to making any changes, Assure the same setting are programmed following the upgrades.**
b. **Upgrade the existing control valve actuators with new electronic DDC actuation, rebuild or replace the existing control body as required**
c. **Replace the existing control damper actuators with new electronic DDC actuation**
d. **Replace the existing pneumatic controls and space temperature sensor with new electronic DDC controls and electronic room sensors. Locate the sensor in the same location as the original thermostat and pull the wiring cable through the old pneumatic tubing runs in the wall for a concealed installation, all exposed conduit and Wire Mold must be approved by the Owner and Engineer prior to installation.**
e. **Provide all the software programming as required utilizing the new actuation.**

Control Device		Qty	Product Number	Manufacturer	SD Number	Document Number	Description
Field Mounted Devices							
AE	1	1	GDE131.1P	SIEMENS		154 011	ACT NSR PLENUM 24/10BL 5Nm
CBL	1	1	588-100B	SIEMENS		149 957	6-WIRE 2-RJ11 RS CABLE 50TPLMN
ENCL	1	1	550-002	SIEMENS			ENCLOSURE ASSY,TEC
RE	1	1	RH2BU-AC120VNT	IDEC		1202cui016	RELAY,50C,GP DPDT AC120V 10A
TEC	1	1	540-100	SIEMENS	5600-15	149 171	TERM BOX CTLR ELEC OUT
TTE	1	1	540-660A	SIEMENS		149 312	TEC RM SNSR-BEIGE
TTE	2	1	536-811	SIEMENS	5600-60	149 134	100K OHM DUCT TEMP SENSOR
V		1					SEE VALVE SUBMITTAL
XFMR	1	1	120-24-050-2TF	CORE		1202cui004	TRANSFORMER 120/24 50VA 2HUB
XFMR	2	1	120-24-100ZFCB	CORE		1202cui008	TRANSFORMER 120/24 100VA 2 HUB

The variable volume (VAV) terminal unit is controlled independent of system pressure fluctuations by an application specific DDC controller using electric actuation. The space served by the VAV terminal unit is controlled in Occupied and Unoccupied modes as follows:

Occupied
The VAV terminal unit is controlled within user defined maximum and minimum supply air volume settings. The controller monitors the room temperature sensor and air velocity sensor and modulates the supply air damper in sequence with the reheat valve to maintain the room temperature at set point. The terminal unit fan recirculates return air on a call for heating.

Unoccupied
The terminal unit is controlled using the night set point. The controller may reset to the Occupied mode for a predetermined time period upon a signal from the control system or manually at the room sensor.

2007-2008 RETROFIT

Existing FPVAV Boxes not currently on the Siemens DDC Apogee System with existing pneumatic control, control valve and damper actuation,

a. **Completely document the current Box CFM setting for different modes of operation prior to making any changes, Assure the same setting are programmed following the upgrades.**
b. **Upgrade the existing control valve actuators with new electronic DDC actuation, rebuild or replace the existing control body as required**
c. **Replace the existing control damper actuators with new electronic DDC actuation**
d. **Replace the existing pneumatic controls and space temperature sensor with new electronic DDC controls and electronic room sensors. Locate the sensor in the same location as the original thermostat and pull the wiring cable through the old pneumatic tubing runs in the wall for a concealed installation, all exposed conduit and Wire Mold must be approved by the Owner and Engineer prior to installation.**
e. **Provide all the software programming as required to utilize the new actuation.**

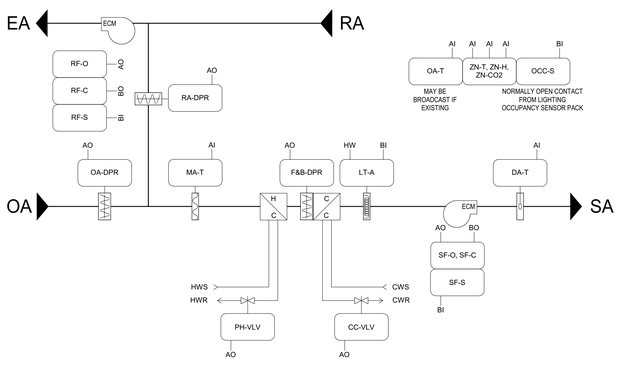

1A 4-PIPE UNIT VENTILATOR (UNIT A, B, & C) WITH FACE & BYPASS DAMPER
NOT TO SCALE

UNIT VENT SEQUENCE OF OPERATION

TCC CONTROLLER AND DEVICES SHALL BE FURNISHED BY TCC TO UNIT VENTILATOR MANUFACTURER FOR FACTORY INSTALLATION AND WIRING. CONTROL VALVES FURNISHED BY TCC, INSTALLED BY THE DIV. 23 CONTRACTOR. SCHEDULED MECHANICAL AIRFLOWS HAVE BEEN UPSIZED TO ALLOW FOR HIGHER AIRFLOW FOR DEHUMIDIFICATION AND CO2 EVENTS. THE OUTSIDE AIR WILL FULLY OPEN AND FAN SPEED SHALL STAGE TO MAXIMUM CFM DURING HIGH CO2 TIME PERIODS PER THE MECHANICAL SCHEDULES. DURING HIGH OUTSIDE AIR TEMPERATURES, THE CHILLED WATER VALVE WILL FULLY OPEN AND THE FACE & BYPASS DAMPER WILL MODULATE AS NEEDED. THE VUV WILL RETURN TO NORMAL OPERATING CFM AFTER VENTILATION RATE HAS BEEN MET.

OCCUPIED CYCLE: THE UNIT RUNS (SF-C, RF-C) BASED UPON AN OWNER-DEFINED TIME OF DAY SCHEDULE OR MANUALLY AS SELECTED BY THE OPERATOR. UNIT VENTS WILL REVERT TO OCCUPIED MODE IF THE OCCUPANCY SENSOR (OCC-S) UTILIZED FOR LIGHTING IS ENABLED AFTER THE NORMAL OCCUPANCY SCHEDULE FOR AN ADJUSTABLE TIME LONG ENOUGH TO PREVENT SHORT CYCLING. IF THE SUPPLY FAN STATUS (SF-S) OR RELIEF FAN STATUS (RF-S) DOES NOT MATCH THE COMMANDED VALUE, AN ALARM WILL BE GENERATED. WHEN THE FAN STATUS INDICATES THE FAN IS STARTED, THE CONTROL SEQUENCE WILL BE ENABLED.

OCCUPIED COOLING MODE: SUPPLY FAN SHALL START AT FULL COOLING DEMAND WITH OUTDOOR AIR DAMPER CLOSED (UNLESS ECONOMIZER IS ENABLED) AND SUPPLY FAN (SF-O) AT 100% SPEED. DECREASES IN COOLING DEMAND SHALL DECREASE FAN SPEED FROM FULL SPEED DOWN TO MINIMUM SPEED (25% OF FULL SPEED). FURTHER DECREASES IN COOLING DEMAND SHALL BE WITH THE FAN SPEED AT MINIMUM AND THE COOLING CONTROL VALVE (CLG-VLV) POSITION MODULATING IN RESPONSE TO THE ZONE SETPOINT (ZN-T). OCCUPIED COOLING SETPOINT SHALL BE 74F (ADJ). THE FACE AND BYPASS DAMPER (F&B-DPR) SHALL BYPASS THE COIL WHEN NOT IN COOLING MODE.

UNOCCUPIED COOLING MODE: SUPPLY FAN SHALL START AT 60% SPEED WITH THE OUTSIDE AIR DAMPER CLOSED (UNLESS ECONOMIZER IS ENABLED) WHEN THE ZONE TEMPERATURE EXEEDS THE UNOCCUPIED COOLING SETPOINT OF 78F (ADJ). DECREASES IN COOLING DEMAND SHALL DECREASE FAN SPEED FROM 60% DOWN TO MINIMUM SPEED (25% OF FULL SPEED). FURTHER DECREASES IN COOLING DEMAND SHALL BE WITH THE FAN SPEED AT MINIMUM AND THE CHILLED WATER CONTROL VALVE POSITION MODULATING IN RESPONSE TO THE ZONE SETPOINT.

OCCUPIED HEATING MODE: SUPPLY FAN SHALL START AT FULL HEATING DEMAND WITH OUTDOOR AIR DAMPER CLOSED AND FAN AT 100% SPEED. DECREASES IN HEATING DEMAND SHALL BE WITH THE FAN AT 100% SPEED AND THE PREHEAT COIL (PH-VLV) MODULATING IN RESPONSE TO THE ZONE SETPOINT. DISCHARGE AIR TEMPERATURE SHALL NOT EXCEED 95F. OCCUPIED HEATING SETPOINT SHALL BE 70F (ADJ).

UNOCCUPIED HEATING MODE: SUPPLY FAN SHALL START AT 60% SPEED WITH THE OUTSIDE AIR DAMPERS CLOSED WHEN THE ZONE TEMPERATURE DROPS BELOW THE UNOCCUPIED HEATING SETPOINT OF 64F (ADJ). DECREASES IN HEATING DEMAND SHALL BE WITH THE FAN SPEED AT 60% AND THE REHEAT COIL MODULATING IN THE SAME MANNER AS IN OCCUPIED HEATING MODE.

RELIEF FAN TRACKING: THE RELIEF FAN SHALL MODULATE SPEED (RF-O) IN CONJUNCTION WITH THE OUTSIDE AIR DAMPER. THE RELIEF FAN SHALL INCREASE SPEED AS THE OUTDOOR AIR DAMPER MODULATES OPEN. THE TEST AND BALANCE CONTRACTOR SHALL PROVIDE THE OUTDOOR AIR DAMPER POSITION THAT SHALL ENABLE THE RELIEF FAN AT MINIMUM SPEED TO CREATE A SLIGHTLY POSITIVE ZONE PRESSURE OF +0.05" W.C.

ZONE HUMIDITY CONTROL: IF THE ZONE HUMIDITY (ZN-H) RISES ABOVE SETPOINT, THE SUPPLY FAN SPEED SHALL BE SET TO THE MAXIMUM SPEED AS ESTABLISHED BY THE TEST AND BALANCE CONTRACTOR. THE COOLING VALVE SHALL FULLY OPEN AND FACE AND BYPASS DAMPERS (F&B-DPR) SHALL MODULATE TO MAINTAIN THE ZONE TEMPERATURE. A DIFFERENTIAL SHALL BE PROVIDED TO PREVENT THE UNIT FROM CYCLING BETWEEN THIS MODE.

ENTHALPY SWITCHOVER: WHEN THE SHARED OUTSIDE AIR ENTHALPY (OA-T, OA-H) IS BELOW THE ZONE ENTHALPY (ZN-T, ZN-H), THE ECONOMIZER SHALL BE ENABLED. WHEN THE SHARED OUTSIDE AIR ENTHALPY RISES ABOVE THE RETURN AIR ENTHALPY, THE ECONOMIZER WILL BE DISABLED.

ZONE CARBON DIOXIDE CONTROL: WHEN THE ZONE CARBON DIOXIDE LEVEL (ZN-CO2) EXCEEDS THE SETPOINT OF 1000PPM, THE MIXED AIR DAMPERS SHALL BRING IN MORE OUTSIDE AIR SUBJECT TO A MIXED AIR TEMPERATURE (MA-T) LOW LIMIT OF 53F (ADJ) AND A HIGH LIMIT OF 80F (ADJ). OUTSIDE AIR DAMPER SHALL BE CAPABLE OF CLOSING IF CO2 LEVELS ARE BELOW 900PPM. A DIFFERENTIAL SHALL BE PUT IN PLACE TO PREVENT CYCLING OF DAMPERS IN THIS MODE.

MORNING WARM-UP CONTROL: THIS SYSTEM CAN BE USED FOR MORNING WARM-UP IF REQUIRED. THIS CYCLE SHALL BE SELECTABLE FROM AN ON/OFF BUTTON ON THE SYSTEM GRAPHICS. IF SELECTED "ON", THE FOLLOWING SEQUENCE SHALL BE ENABLED. IF THE OUTSIDE AIR TEMPERATURE IS BELOW 40F (ADJ), THE UNIT WILL START BASED ON ITS TIME OF DAY SCHEDULE. THE UNIT SHALL RUN IN A FULLY RECIRCULATED MODE. SUPPLY FAN SHALL BE OFF. WHEN SUPPLY FAN RUN STATUS IS ESTABLISHED, THE UNIT SHALL GO INTO A HEATING MODE AND THE (DA-T) SHALL BE LIMITED TO A MAXIMUM OF 80F (ADJ).

SAFETIES: IF A TEMPERATURE LOW LIMIT SWITCH (LT-ALM) SENSES A TEMPERATURE BELOW 35F, THE SUPPLY FAN WILL BE SHUTDOWN VIA A HARDWIRE INTERLOCK. LOW LIMIT SHALL BE AUTO RESET. SOFTWARE SHALL LOCKOUT OPERATION UPON THIRD TRIP WITHIN A TWENTY FOUR HOUR PERIOD. MANUAL RESET BY GRAPHICS OR LOCALLY BY POWER CYCLING SHALL BE REQUIRED TO RESTART THE UNIT. THE OUTSIDE AIR DAMPER SHALL SPRING RETURN SHUT AND BOTH FANS SHALL BE OFF. BOTH CONTROL VALVES SHALL SPRING OPEN.

POINTS LIST: THE POINTS LIST REPRESENTS THE MINIMUM POINTS TO BE PROVIDED AND DISPLAYED IN THE SYSTEM GRAPHICS. ADDITIONAL POINTS REQUIRED TO MEET THE SEQUENCE SHALL BE PROVIDED AND ALSO SHOWN.

	Hardware Points				Software Points						
Point Name	AI	AO	BI	BO	AV	BV	Loop	Sched	Trend	Alarm	Show On Graphic
Outside Air Temperature (OA-T)(May Be Broadcast)	x								x		x
Discharge Air Temperature (DA-T)	x								x		x
Mixed Air Temperature (MA-T)	x								x		x
Space Temperature (ZN-T)	x								x		x
Space Humidity (ZN-H)	x								x		x
Space Carbon Dioxide Level (ZN-CO2)	x								x		x
Outside Air Damper (OA-DPR)		x							x		x
Return Air Damper (RA-DPR)		x							x		x
Face and Bypass Damper (F&B-DPR)		x							x		x
Supply Fan Speed (SF-O)		x							x		x
Relief Fan Speed (RF-O)		x							x		x
Preheat Valve (PH-VLV)		x							x		x
Cooling Valve (CC-VLV)		x							x		x
Supply Fan Status (SF-S)			x						x		x
Relief Fan Status (RF-S)			x						x		x
Low Limit (LT-A)			x						x	x	x
Occupancy Status (OCC-S)			x						x		x
Supply Fan Start/Stop (SF-C)				x					x		x
Relief Fan Start/Stop (RF-C)				x					x		x

	Hardware Points				Software Points						
Point Name	AI	AO	BI	BO	AV	BV	Loop	Sched	Trend	Alarm	Show On Graphic
Fan Failure						x			x	x	
Low Discharge Air Temperature (<45F)						x			x	x	
High Discharge Air Temperature (>120F)						x			x	x	
Zone Needs Heating (< stpt - 2)						x					
Zone Needs Cooling (> stpt + 2)						x					
Occupied Override (run for 1 hour)						x			x		x
Hot Water Available						x			x		x
Chilled Water Available						x			x		x
Minimum Mixed Air Damper Position					x						x
Outside Air Deadband					x						
Economizer Temperature Setpoint					x						x
Minimum Discharge Air Temperature					x						
Occupied								x	x		x

SCHMIDT ASSOCIATES
415 Massachusetts Avenue
Indianapolis, IN 46204
www.schmidt-arch.com

Project No. 2018-050.LNH
Project Date 07.06.2020
Produced DLM

SARAH KATHLEEN HEMPSTEAD REGISTERED NO. AR10400134 STATE OF INDIANA ARCHITECT

Sarah K Hempstead

These Drawings and Specifications, and all copies thereof are and shall remain the property and copyright of the Architect. They shall be used only with respect to this Project and are not to be used on any other Project or Work without prior written permission from the Architect.

#	Revision	Date
A2	ADDENDUM #2	07.23.2020
A3	ADDENDUM #3	07.30.2020

7802 Hague Road
Indianapolis, IN 46256

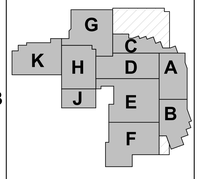

KEY PLAN

N

MSD OF LAWRENCE TOWNSHIP

ADDITIONS AND RENOVATIONS TO LAWRENCE NORTH HIGH SCHOOL

TEMPERATURE CONTROLS SCHEMATICS

M-706